TECHNICAL MANUAL

OVERHAUL INSTRUCTIONS

DEPOT

NAVY MODELS

R1820-76A, -76B, -76C, -76D, -80, -80A -80B, -86A AND -86B

AIRCRAFT ENGINES

CURTISS-WRIGHT

N00600-76-D-0596

Each transmittal of this document outside of the Department of Defense must have approval of the issuing Service.

This manual supersedes NAVAIR 02A-35GH-3 dated 15 October 1964.

Published by direction of Commander, Naval Air Systems Command

1 September 1977

TABLE OF CONTENTS

Section		Page
LIST OF ILLUSTRATIONS		xi
LIST OF TABLES		xxi
INTRODUCTION		xxiii
I	GENERAL INFORMATION	1-1
1-1.	General Description	1-1
1-2.	General Terms Defined	1-3
1-9.	Crankcase Front Section	1-8
1-10.	Propeller Shaft and Reduction Gearing (R1820-76 Series, -86A, -86B)	1-8
1-11.	Propeller Shaft and Reduction Gearing (R1820-80 Series)	1-9
1-12.	Cam Mechanism	1-9
1-13.	Crankcase Main Section	1-9
1-14.	Crankshaft and Articulated Rods	1-9
1-16.	Cylinders, Pistons and Valve Mechanisms	1-9
1-19.	Cylinder Air Deflectors	1-10
1-20.	Supercharger Front Housing and Intake Pipes	1-10
1-21.	Impeller and Impeller Shaft	1-10
1-22.	Supercharger Rear Housing and Diffuser Plate	1-10
1-23.	Accessory Drive and Starter Shaft	1-10
1-24.	Impeller Drive and Clutch Control Valve (R1820-76 Series, -86A, -86B)	1-10
1-25.	Impeller Drive (R1820-80 Series)	1-11
1-26.	Magnetos	1-11
1-30.	Ignition System	1-11
1-32.	Front Oil Sump and Pump	1-12
1-33.	Oil Pump, Dual Accessory and Fuel Pump Drives	1-12
1-34.	Supercharger Rear Cover	1-12
1-35.	Carburetion	1-12
1-37.	Induction System	1-12
1-38.	Lubrication System	1-12
1-40.	Rear Oil Pump	1-13
1-41.	Pressure Relief Valve	1-13
1-42.	Check Valve	1-13
1-43.	Pressure Oil Strainer	1-13
1-44.	External Hydro-Oil Tube	1-13
1-45.	Scavenge System	1-13
1-47.	Rear Oil Pump Drive Gear Spring	1-19
1-48.	Accessories	1-19
II	AEROSPACE GROUND EQUIPMENT (AGE)	2-1
2-1.	General	2-1
2-4.	Functional Tool List	2-1
2-5.	Numerical Tool Index	2-1
III	DISMANTLING	3-1
3-1.	General Dismantling	3-1
3-3.	Engine Shipping Container Description	3-1
3-4.	Engine Shipping Container Cover Removal	3-2
3-5.	Accessory Mounting Assembly Removal	3-2
3-6.	Engine Removal from Shipping Container	3-2
3-7.	Engine Installation in Disassembly Stand	3-2
3-8.	Preparing Engine for Disassembly	3-2
3-9.	Identification of Engine Components Prior to Disassembly	3-4
IV	DISASSEMBLY OF SUBASSEMBLIES	4-1
4-1.	General Disassembly	4-1
4-3.	Propeller Shaft Thrust Bearing Nut Removal	4-1
4-4.	Propeller Shaft Hydro-Oil Connection Nut and Adapter Removal	4-2
4-5.	Carburetor and Priming System, Removal	4-2
4-8.	Magneto Removal	4-3
4-9.	External Hydro-Oil Supply Rear Tube Removal	4-3
4-10.	External Oil Sump Tube Removal	4-4
4-11.	Supercharger Rear Section Removal	4-4
4-12.	Supercharger Rear Section Removal (Alternate Procedure)	4-4
4-13.	Intake Pipe Removal	4-6
4-14.	Rear Spark Plug Removal	4-6
4-15.	Cylinder Head Deflector Removal	4-6

TABLE OF CONTENTS (Cont)

Section		Page
4-16.	Inter-Cylinder Air Deflector Removal	4-6
4-17.	External Hydro-Oil Supply Front Tube Removal	4-7
4-18.	Front Spark Plug Removal	4-7
4-19.	Ignition Cable Assembly Removal	4-7
4-20.	Rocker Box Cover Removal	4-7
4-21.	Rocker Arm and Push Rod Removal	4-9
4-22.	Push Rod Housing and Adapter Removal	4-9
4-23.	Valve Tappet Socket and Spring Removal	4-10
4-24.	Valve Tappet and Guide Removal	4-10
4-25.	Front Oil Sump Pump Removal	4-11
4-26.	Cylinder and Piston Removal	4-11
4-27.	Crankcase Front Section Removal	4-14
4-28.	Reduction Drive Gear Removal	4-14
4-29.	Crankcase Front Main Section Removal	4-14
4-30.	Crankshaft Assembly Removal	4-14
4-31.	Crankcase Rear Main Section Removal	4-19
4-32.	Supercharger Front Housing Removal	4-19
4-33.	Crankshaft Rear End Removal	4-19
4-34.	Crankshaft Front End Disassembly	4-19
4-35.	Crankshaft Rear End Disassembly	4-19
4-36.	Articulated Rods Disassembly	4-22
4-37.	Crankcase Front Main Section Disassembly (R1820-76 Series, -86A and -86B)	4-22
4-38.	Crankcase Front Main Section Disassembly (R1820-80 Series)	4-22
4-39.	Cam and Cam Support Disassembly (R1820-76 Series, -86A and -86B)	4-25
4-40.	Cam and Cam Support Disassembly (R1820-80 Series)	4-25
4-41.	Cam Support Alignment Pin and Retaining Plate Removal	4-25
4-42.	Governor Intermediate Drive Gear and Cam Intermediate Drive Gear Disassembly	4-25
4-43.	Crankcase Rear Main Section Disassembly	4-25
4-44.	Crankcase Front Section Disassembly (R1820-76 Series, -86A, -86B)	4-25
4-45.	Crankcase Front Section Disassembly (R1820-80 Series)	4-27
4-46.	Propeller Shaft Disassembly (R1820-76 Series, -86A and -86B)	4-28
4-47.	Propeller Shaft Disassembly (R1820-80 Series)	4-28
4-48.	Governor Drive Gear Disassembly	4-30
4-49.	Front Oil Sump and Pump Disassembly	4-30
4-50.	Cylinder and Piston Disassembly	4-30
4-52.	Rocker Arm Disassembly	4-32
4-53.	Supercharger Front Housing Disassembly	4-32
4-54.	Rear Oil Pump Removal	4-32
4-55.	Dual Accessory Drive Housing Removal	4-32
4-56.	Supercharger Clutch Oil Control Valve Removal (R1820-76 Series, -86A and -86B)	4-32
4-57.	Supercharger Clutch Control Valve Substituting Cover Removal (R1820-80 Series)	4-35
4-58.	Supercharger Drain Valve Removal	4-35
4-59.	Substituting Covers Removal	4-35
4-60.	Magnetic Drain Plug Removal	4-37
4-61.	Oil Strainer Removal	4-37
4-62.	Fuel Pump Drive Shaft Support Removal	4-37
4-63.	Supercharger Rear Cover Removal	4-37
4-64.	Impeller Drive and Accessory Drive and Starter Shaft Removal (R1820-76 Series, -86A and -86B)	4-37
4-65.	Impeller Drive and Accessory Drive and Starter Shaft Removal and Disassembly	

TABLE OF CONTENTS (Cont)

Section		Page
	(R1820-80 Series)	4-37
4-66.	Impeller Removal	4-38
4-67.	Diffuser Plate Removal	4-39
4-68.	Rear Oil Pump Disassembly.	4-40
4-69.	Dual Accessory Drive Disassembly	4-41
4-70.	Fuel Pump Drive Shaft Support Disassembly	4-41
4-71.	Two Speed Impeller Drive Sprag Clutch Disassembly (R1820-86A, -86B)	4-41
4-72.	Supercharger Rear Cover Disassembly (R1820-76 Series, -86A and -86B)	4-44
4-73.	Supercharger Rear Cover Disassembly (R1820-80 Series).	4-44
4-74.	Accessory Drive Gear Disassembly	4-46
4-75.	Roller Clutch Disassembly (R1820-76 Series, -86A and -86B)	4-46
4-76.	Impeller Intermediate Drive Gear Shaft and Pinion Gage Disassembly (R1820-76 Series, -86A and -86B)	4-46
4-77.	Accessory Drive and Starter Shaft Disassembly	4-47
V	CLEANING	5-1
5-1.	General Cleaning	5-1
5-8.	Precleaning	5-1
5-11.	Heavy Sludge Removal	5-2
5-19.	Carbon Removers	5-3
5-33.	Bearings	5-6
5-36.	Internal Passages	5-6
5-39.	Cylinders	5-7
5-47.	Pistons	5-9
5-48.	Magnesium or Aluminum Parts	5-9
5-49.	Oil Strainer	5-9
5-55.	Increased Capacity Rear Oil Pump Scavenge Strainer	5-13
5-59.	Self-Locking Nuts	5-13
5-60.	Push Rod Assembly	5-13
5-62.	Cleaning Table	5-15
5-65.	Specialized Cleaning	5-15
5-66.	Corrosion Preventive	5-15
VI	INSPECTION AND REPAIR	6-1
6-1.	General Inspection and Repair.	6-1
6-9.	Marking Engine Parts for Identification Purposes	6-4
6-19.	Types of Inspection	6-6
6-40.	Special Cases of Magnetic Particle Inspection	6-18
6-57.	Anti-Friction Bearings Inspection	6-23
6-65.	Crankcase Front Section Inspection	6-31
6-67.	Propeller Shaft and Reduction Gear Inspection	6-31
6-74.	Power Section Inspection	6-32
6-76.	Crankcase Main Section Cylinder Decks	6-33
6-81.	Crankshaft Inspection	6-34
6-88.	Master Connecting Rod Inspection	6-36
6-97	Articulated Rod Inspection	6-42
6-101.	Cylinder Inspection	6-42
6-116.	Piston Inspection	6-47
6-122A.	Rocker Box Cover Inspection	6-49
6-123.	Rocker Arm Assemblies	6-50
6-131.	Valve Inspection	6-51
6-143.	Push Rod Housing and Push Rod Inspection	6-60
6-144.	Deflectors Inspections	6-60
6-146.	Supercharger Section and Accessory Drives	6-61
6-181.	Rear Oil Pump Inspection	6-68
6-186.	Oil-In Strainer Inspection	6-70
6-190.	Repair and Replacement	6-72
6-197.	Cutting Oil and Coolants	6-78
6-201.	Miscellaneous Headless Screw Bushings Replacement	6-78
6-206.	Miscellaneous Stud Replacement	6-83
6-214.	Hexagon Head Screw Bushings Replacement	6-84
6-219.	Anti-Friction Bearings - Reconditioning Of	6-85
6-223.	Welding of Engine Parts	6-86
6-225.	Crankcase Front Section - Rework to Prevent Cracking	6-86
6-227.	Crankcase Front Section Attaching Bolt Hole Repair	6-87

TABLE OF CONTENTS

Section		Page
6-228.	Crankcase Front Section to Crankcase Main Section Bolt Hole Spotfaces	6-87
6-229.	Crankcase Front Section Oil Transfer Dowel, Oil Seal Ring, Seating Surface Repair	6-88
6-230.	Propeller Shaft Thrust Bearing Retainer Replacement	6-88
6-236.	Crankcase Front Section Stationary Reduction Gear Seating Surface	6-91
6-237.	Crankcase Front Section Valve Tappet Guide OD and Housing Guide Bores - Reconditioning	6-92
6-243.	Crankcase Front Section Wye Type Hydro Connector (R1820-86A, -86B)	6-95
6-248.	Oil Sump Scavenge Pump Drive Shaft Gear Bushing - Removing and Installing	6-99
6-252.	Governor Drive Gear Shaft Bushing Replacement	6-100
6-258.	Propeller Shaft Bushing Replacement (R1820-76 Series, -86A and -86B)	6-102
6-271.	Propeller Shaft Bushings - Replacement (R1820-80 Series)	6-111
6-280.	Propeller Shaft Sleeve, Rework of	6-116
6-281.	Propeller Shaft Thrust Bearing Spacers, Reconditioning	6-116
6-282.	Stationary Reduction Gear Honing (R1820-76 Series, -86A, -86B)	6-117
6-284.	Stationary Reduction Gear Reconditioning (R1820-76C, -76D, -86A, -86B)	6-117
6-288.	Stationary Reduction Gear Support Sleeve Honing (R1820-80 Series)	6-119
6-290.	Stationary Reduction Gear Support and Sleeve ID - Reconditioning (R1820-80 Series)	6-119
6-297.	Reduction Gear Pinion Bore Grinding (R1820-80 Series)	6-122
6-300.	Reduction Gear Pinion Carrier Trunnion - Grinding (R1820-80 Series)	6-123
6-302.	Reduction Gear Pinion Carrier Trunnion Thrust and End Face Reconditioning (R1820-80 Series)	6-124
6-304.	Balanceweight and Balanceweight Drive Gear Bores - Grinding (R1820-80 Series)	6-124
6-307.	Cam and Oil Sump Pump Drive Gear Support Ring Replacement	6-125
6-310.	Cam and Balanceweights and Oil Sump Pump Drive Support Bearing, Replacement (R1820-80 Series)	6-127
6-313.	Cam and Oil Sump Pump Drive Support Bushings, Replacement (R1820-76 Series, -86A, -86B)	6-127
6-319A.	Cam and Balanceweights and Oil Sump Pump Drive Support Bushings, Removing and Installing	6-132
6-320.	Cam and Balanceweights and Oil Sump Pump Drive Support Trunnions, Grinding (R1820-80 Series)	6-132A
6-323.	Cam and Balanceweights and Oil Sump Pump Drive Support, Balanceweight and Gear Retaining Bolt Holes, Oversize Reaming (R1820-80 Series)	6-134
6-325.	Cam Tracks, Vapor Blasting Procedure	6-135
6-326.	Crankcase Cylinder Deck Grinding	6-135
6-329.	Crankcase Main Section, Cylinder Hold-Down Cap Screw Hole Threads, Reconditioning	6-137
6-333.	Crankcase Main Section Rear Main Bearing Liner Replacement	6-140
6-339.	Crankshaft Front End Extension Journals Grinding	6-146

TABLE OF CONTENTS (Cont)

Section		Page
6-340A.	Crankshaft Crankpin, Reconditioning of	6-147
6-341.	Crankshaft Crankpin, Grind and Lap for Undersize Master Rod Bearing	6-148
6-345.	Crankshaft Crankpin Front Thrust Face Grinding	6-150
6-347.	Front and Rear Counterweight Bushings, Front Crankshaft Counterweight Bushings and Rear Crankshaft Counterweight Bearings, Replacement (R1820-76A, -76B, -80)	6-152
6-359.	Front and Rear Counterweight Bushings, Front Crankshaft Counterweight Bushings and Rear Crankshaft Counterweight Bearings, Replacement (R1820-76C, -76D, -80B, -86B)	6-159
6-373.	Crankshaft Rear End, Removal of Nitride Case Cracks at Clamp Bolt Area	6-166
6-376.	Crankshaft Rear End Salvage When Accessory Drive and Starter Shaft Coupling Splines Are Worn	6-166
6-379.	Rear Crankshaft, Non Functional Oil Hole Plugging	6-168
6-380.	Accessory Drive and Starter Shaft Coupling Installation	6-168
6-383.	Master Rod Knuckle Pin Holes Grinding, Peening and Honing	6-169
6-389.	Piston and Knuckle Pin Bushing Replacement	6-174
6-402.	Master Rod Bearing Bore, Oversize Honing	6-180
6-403.	Master Rod Hub Outside Diameter Reconditioning	6-181
6-408.	Master Rod Anti-Propeller (Spacer) Hub Journal and End Face Reconditioning	6-182
6-410.	Master Rod Oil Seal Disc, Rework (R1820-76C, -76D, -80A, -80B, -86A, -86B)	6-183
6-411.	Piston Pin Inside Diameter Reconditioning	6-184
6-412.	Cylinder Hold-Down Flange Reconditioning	6-184
6-417.	Cylinder Bore Reconditioning	6-187
6-421.	Cylinder Head or Cylinder Barrel Replacement (Timed)	6-189
6-428.	Spark Plug Insert Replacement	6-195
6-438.	Cylinder Head Thermocouple (Bayonet Type) Hole Adapter, Replacement	6-199
6-440.	Outer Push Rod Housing Connection Replacement	6-200
6-442.	Cylinder Head Salvage Rework for Cracks at Target Hole Location	6-200
6-444.	Cylinder Barrel Cooling Fins, Replacement	6-202
6-452.	Cylinder Head Damage, Weld Repair	6-204
6-453.	Cylinder Head Vertical Fins Baffle Attaching Bolt Spaces Solid Boss Salvage	6-206
6-459.	Cylinder Barrel Fin and Head Fin Silastic Fin Braces - Replacement	6-208
6-464.	Intake Valve Seat and Guide Replacement	6-210
6-472A.	Exhaust Valve Guide Rework	6-215
6-473.	Exhaust Valve Seat and Guide Replacement	6-215
6-480.	Exhaust Valve Guide, Aluminum Backed, Installation	6-222
6-496.	Valve Reconditioning	6-227
6-497.	Cylinder Valve Seat Pressure Test	6-229
6-503.	Rocker Box Cover - Intercylinder Deflector Attaching Hole, Rework	6-231
6-505.	Rocker Arm Plain Bushing Replacement - Intake and Exhaust Valve	6-232
6-509.	Rocker Hub Bolt Bushing Replacement	6-233
6-519.	Rocker Arm Assembly Rework	6-237
6-521.	Rocker Arm Bushing Replacement (R1820-80 Series, -86A, -86B)	6-237
6-528.	Rocker Arm Roller Pin Replacement	6-242
6-531.	Rocker Arm Fork Repair Procedure	6-242

TABLE OF CONTENTS (Cont)

Section		Page
6-532.	Rocker Arm Spacer Reconditioning	6-243
6-533.	Rocker Arm Thrust Washer Reconditioning	6-243
6-534.	Intake Pipe Drain Boss (Cylinders No. 4 and No. 6), Salvage	6-243
6-537.	Cylinder Exhaust Pipe Connector or Sleeve, Replacement	6-245
6-542A.	Rework of Exhaust Pipe Connector (P/N 149596 and Oversizes)	6-248
6-544.	Exhaust Pipe Flange to Cylinder Exhaust Port Attaching Stud Replacement (R1820-76 Series)	6-250
6-551.	Cylinder Assembly Exhaust Port Pad Repair	6-251
6-556.	Wedge-Type Piston Ring Grooves Reconditioning	6-252A
6-560.	Valve Tappet Roller Tracks Reconditioning	6-255
6-563.	Valve Tappet Roller ID Reconditioning	6-257
6-570.	Supercharger Front Housing Mounting Face Reconditioning	6-258
6-573.	Supercharger Front Housing Reconditioning at Diffuser Plate Contact Area	6-259
6-576.	Supercharger Front Housing Mounting Bolt Holes Repair	6-260
6-578.	Supercharger Front Housing Wear Groove Repair	6-261
6-580.	Supercharger Front Housing Impeller Shaft Bearing Support and Supercharger Rear Housing Impeller Shaft Sleeve - Replacement, Honing, Oil Seal Ring Fitting	6-261
6-595.	Front and Rear Impeller Shaft Oil Seal Sleeves Groove Grinding for Oversize Widths	6-268
6-597.	Impeller Shaft Bushing Replacement	6-268
6-604.	Impeller Reconditioning and Static Balancing	6-272
6-611.	Inspection and Rework of Inducer and Blades	6-275
6-615.	Supercharger Rear Housing Carburetor Mounting Pad Salvage	6-277
6-617.	Carburetor Adapter Attaching Stud Replacement	6-277
6-622.	Carburetor Air Inlet Screen Reconditioning	6-279
6-626.	Supercharger Rear Housing Drain Valve Extension Tube Replacement	6-280
6-632.	Supercharger Rear Housing Oil Seal Vent Tube Replacement	6-280
6-639.	Oil Sump - Incorporation of Additional Clean-Out Plugs	6-286
6-648.	Oil Sump Machining Assembly Strainer Sleeve Boss, Repair of	6-289
6-650.	Diffuser Plate Vane Salvage and Reconditioning	6-289
6-654.	Diffuser Plate Vane Grooves Repair	6-292
6-656.	Diffuser Plate to Supercharger Rear Section Reconditioning to Obtain Tight Fit	6-292
6-662.	Supercharger Rear Housing Pilot Diameter, Rework by Plasma Spray	6-293
6-663.	Accessory Drive and Starter Shaft Reconditioning	6-293
6-667.	Accessory Drive and Starter Shaft Spherical Oil Seal and Retainer Lapping	6-295
6-672.	Impeller Low Speed Drive Clutch Cam Assembly to Roll Clutch Cage Clearance	6-297
6-673.	Impeller Drive Clutch Housing Machining	6-298
6-674.	Impeller Intermediate Drive Shaft Front and Rear Bushings Replacement (R1820-80 Series)	6-298
6-682.	Impeller Intermediate Drive Shaft Front Bushing Replacement (R1820-76 Series, -86A, -86B)	6-300

TABLE OF CONTENTS (Cont)

Section		Page
6-688.	Intermediate Impeller Drive Gear Bushing Replacement (R1820-76 Series, -86A, -86B)	6-305
6-694.	Intermediate Impeller Shaft Drive Gear Bushing Replacement (R1820-76 Series, -86A, -86B)	6-307
6-700.	Intermediate Impeller Drive Pinion Journal Reconditioning (R1820-76 Series, -86A, -86B)	6-310
6-702.	Impeller Low Speed Clutch Cam Bushing Replacement (R1820-76 Series, -86A, -86B)	6-310
6-706.	Impeller Drive Multi-Plate Clutch Adapter Repair (R1820-76 Series, -86A, -86B)	6-310
6-708.	Impeller Drive Multi-Plate Clutch Plate Reconditioning (R1820-76 Series, -86A, -86B)	6-312
6-710.	Impeller Drive Pinion Gear Bushing Rework	6-312
6-711.	Impeller Drive Multi-Plate Clutch Sleeve Rework	6-312
6-712.	Fuel Pump Drive Shaft Support Bushing Replacement	6-312
6-718.	Supercharger Rear Housing Cover Reconditioning	6-317
6-723.	Supercharger Rear Housing Cover Bushing Replacement	6-317
6-755.	Supercharger Rear Cover, Rework of Left or Right Magneto	6-336
6-756.	Supercharger Rear Housing Cover, Rework of Worn Generator Pads	6-336
6-757.	Supercharger Rear Cover Machining and Studding Assembly, Repair of	6-339
6-759.	Tachometer Drive Shaft Gear Small Bushing Replacement	6-341
6-765.	Dual Accessory Drive Housing Machining Assemblies, Repair of	6-342
6-766.	Dual Accessory Drive Housing and Cover Bushings Replacement	6-342
6-773.	Rear Oil Pump Mating Surface Repair	6-349
6-774.	Oil Strainer By-Pass Valve	6-350
6-775.	Oil Strainer Housings, Repair of	6-350
6-777.	Magnetic Chip Detector Plug Reconditioning	6-351
6-778.	Reconditioning Worn Engine Parts by Plating	6-351
6-783.	Propeller Shaft Reconditioning	6-353
6-783B.	Crankcase Rework	6-356
6-786.	Crankshaft Reconditioning By Chrome Plating	6-357
6-798.	Crankshaft Front and Rear End, Plating and Nitriding	6-365
6-811.	Crankpin Clamping Surface Copper Plating	6-371
6-828.	Plating Information	6-379
6-846.	Silver Plating	6-383
6-862.	Lead-Tin Plate	6-389
6-865.	Chromium Plating	6-392
6-870.	Electroless Nickel Plating and Nickel Sulfamate Plating	6-396
6-878.	Cadmium Plating	6-400
6-881.	Copper Plating	6-401
6-888.	Lead Plating	6-405
6-892.	Tin Plating	6-407
6-897.	Special Applications	6-408
6-919.	Solutions and Mixing Procedures	6-414
6-964.	Solution Analysis Procedures	6-431
6-1022.	Standard Solutions and Indicators	6-441
6-1054.	Sources of Supply for Plating Chemicals	6-445
VII	ASSEMBLY OF SUBASSEMBLIES	7-1
7-1.	General Assembly of Subassemblies	7-1
7-3.	Gaskets	7-1
7-4.	Table of Limits	7-2
7-5.	Lockwiring	7-2
7-7.	Tab Washers	7-4
7-8.	Cotter Pins	7-4
7-9.	Propeller Shaft Assembly (R1820-76 Series, -86A, -86B)	7-6
7-10.	Propeller Shaft Assembly (R1820-80 Series)	7-6

TABLE OF CONTENTS (Cont)

Section		Page
7-11.	Governor Drive Gear Assembly (R1820-76 Series)	7-7
7-12.	Crankcase Front Section Complete Assembly (R1820-76 Series, -86A, -86B)	7-7
7-13.	Crankcase Front Section Complete Assembly (R1820-80 Series)	7-10
7-15.	Propeller Hydraulic Leakage Test	7-11
7-16.	Propeller Shaft Hydro-Oil Connection Substituting Cover and Nut	7-13
7-18.	Crankshaft Rear End Assembly	7-13
7-19.	Crankshaft Front End Assembly	7-14
7-20.	Articulated and Master Rod Assembly	7-15
7-21.	Crankshaft and Master Rod Complete Assembly	7-16
7-22.	Rear Main Bearing Installation	7-20
7-23.	Governor Intermediate Drive Gear and Cam Intermediate Drive Gear Assembly	7-21
7-24.	Cam Assembly (R1820-76 Series, -86A, -86B)	7-21
7-25.	Cam and Second Order Balanceweight Assembly (R1820-80 Series)	7-21
7-26.	Crankcase Main Section Assembly	7-24
7-27.	Cylinder and Valve Assembly	7-28
7-28.	Rocker Arm Assembly	7-29
7-29.	Piston and Piston Rings Assembly	7-29
7-33.	Valve Tappet and Guide Assembly	7-31
7-34.	Supercharger Rear Housing Assembly	7-32
7-40.	Impeller Intermediate Drive Gear Shaft and Pinion Cage Assembly (R1820-76 Series, -86A, -86B)	7-39
7-41.	Accessory Drive and Starter Shaft Assembly	7-39
7-42.	Magneto Drive Gear Assembly	7-39
7-43.	Fuel Pump and Dual Accessory Drive Gear Assembly	7-39
7-44.	Supercharger Clutch Oil Control Valve Assembly (R1820-76 Series, -86A, -86B)	7-41
7-45.	Supercharger Clutch to Rear Housing Cover Installation (R1820-76 Series, -86A, -86B)	7-41
7-46.	Supercharger Clutch Oil Control Valve to Supercharger Rear Housing Cover Installation (R1820-76 Series, -86A, -86B)	7-42
7-47.	Fuel Pump Drive Shaft Support Assembly	7-43
7-48.	Dual Accessory Drive Assembly	7-43
7-49.	Oil Pump Assembly (R1820-76 Series)	7-44
7-50.	Oil Pump Assembly (R1820-80A, -80B, -86A, -86B)	7-48
7-51.	Supercharger Rear Cover Assembly (R1820-80 Series, -86A, -86B)	7-49
7-52.	Impeller Drive and Accessory Drive and Starter Shaft Installation (R1820-76 Series, -86A, -86B)	7-50
7-53.	Impeller Drive and Accessory Drive and Starter Shaft Installation (R1820-80 Series)	7-51
7-54.	Two Speed Impeller Drive Sprag Clutch Assembly (R1820-86A, -86B)	7-52
7-55.	Supercharger Rear Cover Installation (R1820-76 Series, -86A, -86B)	7-52
7-56.	Supercharger Rear Cover Installation (R1820-80 Series)	7-57
7-57.	Manifold Absolute Pressure Regulator Substituting Cover Installation	7-57
7-58.	Gun Synchronizer Substituting Cover Installation	7-58
7-59.	Oil Strainer Installation	7-58
7-60.	Fuel Pump Support Installation	7-58
7-61.	Magnetic Drain Plug Installation	7-58
7-62.	Supercharger Drain Valve Assembly	7-58

TABLE OF CONTENTS (Cont)

Section		Page
7-64.	Rear Oil Pump Installation	7-59
7-65.	Dual Accessory Drive Assembly	7-61
7-66.	Substituting Covers Installation	7-63
7-67.	Supercharger Front Housing Assembly	7-63
7-71.	Front Oil Sump and Pump Assembly	7-64
7-72.	Ignition Manifold Installation	7-65
VIII	ENGINE FINAL ASSEMBLY	8-1
8-1.	General Engine Final Assembly	8-1
8-3.	Supercharger Front Housing to Engine Assembly Stand Installation	8-1
8-4.	Crankshaft and Master Rod Assembly Installation	8-1
8-5.	Crankcase Front Main Section Installation	8-1
8-6.	Cam Assembly Alignment	8-3
8-7.	Reduction Drive Gear Installation	8-3
8-8.	Crankshaft End Play Check	8-4
8-9.	Cam Timing Check	8-6
8-10.	Crankcase Front Section Installation	8-7
8-11.	Valve Tappet and Guide Installation	8-8
8-12.	Piston and Cylinder Installation	8-8
8-13.	External Hydro-Oil Supply Front Tube Installation	8-12
8-14.	Intercylinder Air Deflector Installation	8-12
8-15.	Valve Tappet Socket and Spring Installation	8-13
8-16.	Push Rod Housing and Adapter Installation	8-14
8-17.	Front Oil Pump Installation	8-14
8-18.	Push Rod and Rocker Arm Installation	8-16
8-19.	Cylinder Head Air Deflector Installation	8-18
8-20.	Ignition Cable Assembly Installation	8-18
8-21.	Valve Clearance Adjustment	8-19
8-22.	Rocker Box Covers Installation (R1820-76 Series)	8-21
8-23.	Rocker Box Cover Installation (R1820-80 Series, -86A, -86B)	8-23
8-24.	Rear Spark Plug Installation	8-23
8-25.	Intake Pipes Installation	8-23
8-26.	Supercharger Rear Housing Installation	8-24
8-27.	Oil Sump External Oil Tube Installation	8-24
8-28.	External Hydro-Oil Supply Rear Tube Installation	8-26
8-29.	Magneto Installation	8-26
8-30.	Front Spark Plug and Ignition Lead Installation	8-31
8-31.	Priming System Installation	8-31
8-32.	Carburetor Installation	8-32
8-33.	Propeller Shaft Hydro-Oil Connection Nut Torquing	8-33
8-34.	Propeller Shaft Thrust Bearing Nut, Examination and Rework of	8-33
8-35.	Propeller Shaft Thrust Bearing Nut Torquing	8-33
IX	DIMENSIONAL LIMITS AND TORQUE VALUES	9-1
9-1.	Torque Wrench Instructions	9-1
9-2.	Pre-Lubrication	9-1
9-3.	Torquing Instructions	9-1
9-4.	Torque Wrench Extensions	9-1
9-5.	Alignment of Locking Pin Holes	9-2
9-6.	Table of Tightening Torque Values	9-2
9-7.	Stud Installations	9-2
9-10.	Screw Bushing Installation	9-3
9-11.	Taper Pipe Thread Plug Installation	9-3
9-12.	Limits	9-3
X	FINAL TEST	10-1
10-1.	General Final Test	10-1
10-11.	Engine Pre-Oiling	10-2
10-16.	Engine Starting	10-3
10-18.	Test Warm-Up	10-3
10-19.	Test Stand Curves	10-3
10-20.	Fuel Consumption	10-3
10-21.	Carburetor Setting	10-4
10-22.	Run-In After Major Overhaul	10-4

TABLE OF CONTENTS (Cont)

Section		Page
10-23.	Magneto Check	10-4
10-24.	Engine Operating Limits	10-4
10-25.	Oil Flow and Consumption	10-4
10-27.	Correction of Oil Flow	10-7
10-29.	Clutch Shift (R1820-76 Series, -86A, -86B)	10-7
10-30.	Idle Check Run	10-8
10-31.	Full Throttle Check Run	10-8
10-32.	Run-Out and Aspiration	10-13
10-33.	Penalty Test	10-13
10-34.	Disposition of Engine	10-13
10-35.	Calibrating Modified Curtiss Electric Flight Propellers	10-14
XI	TROUBLESHOOTING	11-1
XII	PRESERVATION AND STORAGE	12-1
12-1.	Engine Preservation and Packing	12-1
12-3.	Corrosion Preventive Compounds and Mixtures	12-1
12-4.	Packing Engine in Metal Containers	12-1
12-5.	Materials for Packing and Storage	12-2
12-6.	Procedures for Handling Engines in Shipping Containers	12-3

LIST OF ILLUSTRATIONS

Number	Title	Page
1-1.	Cylinder Numbering and Firing Order	1-4
1-2.	Cylinder Capscrew Numbering	1-4
1-3.	Three Quarter Left Front View of Typical Engine	1-5
1-4.	Three Quarter Left Rear View of Typical Engine	1-6
1-5.	Three Quarter Right Rear View of Typical Engine	1-7
1-6.	Exploded View of Typical Engine	1-8
1-7.	Oil System Flow Chart (Sheet 1 of 5)	1-14
2-1.	Thrust Bearing Nut Hydraulic Torque Wrench Assembly (Group 104)	2-69
2-2.	Thrust Bearing Nut Wrench (Group 104)	2-69
2-3.	Hydro-Oil Connection Adapter Puller (Group 101)	2-70
2-4.	Piston Pin Puller (Group 96)	2-70
2-5.	Accessory Drive and Starter Shaft Coupling Puller (Group 3)	2-71
2-6.	Valve Spring Compressor (Group 140)	2-71
2-7.	Impeller Shaft Locking Tool (Group 130)	2-71
2-8.	Oil Strainer Element Holder Rack (Group 90)	2-72
2-9.	Cylinder Bore Honing Fixture (Group 33)	2-72
2-10.	Multiple Crimping Tool (Group 36)	2-73
2-11.	Impeller Shaft Retainer Screw Staking Punch (Group 70)	2-73
2-12.	Ignition Lead Puller (Group 61)	2-73
2-13.	Reduction Driving Gear Nut Wrench (Group 112)	2-73
3-1.	Removing Shipping Container Cover	3-3
3-2.	Lowering Engine into Disassembly Stand	3-4
4-1.	Thrust Bearing Nut - Hydraulic Torque Wrench Assembly	4-2
4-2.	Loosening Hydro-Oil Connection Substituting Cover Nut	4-3
4-3.	Priming System	4-4
4-4.	Removing Supercharger Rear Section and Placing in Disassembly Stand	4-5
4-5.	Loosening Intake Pipe Packing Nut	4-5
4-6.	Disconnecting Rear Spark Plug Leads, and Removing Lead from Head Deflector	4-7
4-7.	Removing Ignition Cable Assembly	4-8
4-8.	Removing Rocker Box Cover Washers	4-8
4-9.	Loosening and Pulling Rocker Arm Hub Bolt Nut	4-9
4-10.	Loosening Push Rod Housing Lower Nut	4-10
4-11.	Pulling Valve Tappet Guide	4-10
4-12.	Removing Front Oil Sump Pump	4-12
4-13.	Removing Cylinder Capscrews	4-12
4-14.	Piston Pin Plug Removing Tool	4-13
4-15.	Removing Crankcase Front Section from Engine and Placing in Disassembly Stand	4-13
4-16.	Loosening Reduction Driving Gear Nut	4-15
4-17.	Pulling Reduction Driving Gear	4-16
4-18.	Loosening Crankcase Main Section Bolt Nuts	4-16
4-19.	Removing Typical Crankcase Front Main Section	4-17
4-20.	Crankcase Front Main Section Protector Installed	4-17
4-21.	Pulling Crankshaft Front Main Bearing Inner Race	4-18
4-22.	Removing and Lowering Crankshaft Assembly to Position for Disassembly Stand	4-18
4-23.	Clamping Crankshaft into Disassembly Stand and Loosening Rear Main Bearing Nut	4-20
4-24.	Loosening Crankcheek Screw and Spreading Crankcheek	4-20
4-25.	Removing Master and Articulated Rods Assembly and Pulling Crankpin Oil Sludge Retaining Plug	4-21
4-26.	Pulling Crankshaft Breather Substituting Plug and Loosening Counterweight Bolt Nut	4-21
4-27.	Pulling Crankshaft Rear Main Bearing Inner Race	4-23
4-28.	Pulling Knuckle Pin Locating Plate	4-23

LIST OF ILLUSTRATIONS (Cont)

Number	Title	Page
4-29.	Loosening Cam Intermediate Drive Gear and Pinion Bolt Nut and Pulling Cam and Support	4-24
4-30.	Removing Second Order Balance-weight Drive Gear Nut (R1820-80 Series) and Governor Intermediate Drive Gear to Cam Intermediate Drive	4-24
4-31.	Breaking Crankcase Front Section Loose from Propeller Shaft and Pulling Flange	4-26
4-32.	Removing Reduction Driving Gear Pinion Guard Ring Nuts (R1820-76 Series, -86A and -86B)	4-27
4-33.	Pulling Propeller Shaft Thrust Bearing Spacer and Loosening Reduction Driving Gear Pinion Nuts (R1820-76 Series, -86A and -86B)	4-28
4-34.	Pulling Thrust Bearing Spacer and Placing Propeller Shaft Assembly in Fixture (R1820-80 Series)	4-29
4-35.	Removing Governor Drive Gear to Shaft Screws and Governor Drive Gear Shaft Plug	4-31
4-36.	Installing Valve Holder and Removing Thermocouple Adapter	4-31
4-37.	Removing Rocker Arm Adjusting Screw and Pressing Out Bearing	4-33
4-38.	Removing Core Hold Plug from Supercharger Front Housing	4-33
4-39.	Removing Oil Pump to Rear Cover Nuts and Oil Pump Foot Nut	4-34
4-40.	Removing Dual Accessory Drive Housing to Rear Cover Plain Nuts and Supercharger Clutch Oil Control Valve Sleeve	4-34
4-41.	Supercharger Clutch Oil Control Valve Substituting Cover (R1820-80 Series)	4-35
4-42.	Removing Return Tube from Supercharger Drain Valve Body and Drain Valve Assembly	4-36
4-43.	Pulling Gun Synchronizer Impulse Generator Drive Substituting Cover and Fuel Pump Drive Shaft Support	4-36
4-44.	Removing Recessed Supercharger Rear Cover Attaching Nut and Breaking Rear Cover Loose from Rear Housing	4-38
4-45.	Loosening Impeller Shaft Nut, and Showing Spacer Between Impeller and Supercharger Rear Housing	4-38
4-46.	Pulling Impeller Shaft	4-40
4-47.	Removing Adjusting Screw Lock Nut and Oil Pressure Relief Valve Body	4-41
4-48.	Loosening Oil Pump Drive Coupling Nut	4-42
4-49.	Pulling Tachometer Drive Shaft Gear Oil Seal and Accessory Drive Gear Oil Seal	4-42
4-50.	Removing Dual Accessory Drive Idler Gear to Intermediate Gear Screws	4-43
4-51.	Pulling Fuel Pump Drive Shaft Oil Seal	4-43
4-52.	Impeller Drive Sprag Clutch Assembly	4-45
4-53.	Pulling Multi-Plate Clutch Piston and Sleeve and Impeller Drive Gear Support and Bushing Assembly	4-45
4-54.	Removing Fuel Pump and Accessory Drive Gear Screws and Magneto Drive Gear to Shaft Screws	4-46
4-55.	Removing Impeller Intermediate Drive Shaft Pinion Cage Bolts and Pressing Out Accessory Drive Gear Springs and Pins	4-47
5-1.	Removing Retaining Ring from Strainer Assembly	5-10
5-2.	Screwing Fixture Screw and Sleeve into Strainer Core	5-10
5-3.	Oil Strainer and Fixture Assembly	5-11
5-4.	Oil Pressure Relief Valve	5-11
5-5.	Push Rod Flushing Fixture	5-14
6-1.	Directions of Magnetizing	6-18
6-2.	Penetrant Inspection	6-21
6-3.	Anti-Friction Bearing Nomenclature	6-24
6-4.	Ball and Roller Bearing Internal Radial Looseness Checking	6-30
6-5.	Stationary Reduction Gear Inspection	6-33
6-6.	Crankshaft Front and Rear Main Bearing Thrust Face Reconditioning Limits	6-35

LIST OF ILLUSTRATIONS (Cont)

Number	Title	Page
6-7.	Checking Master Rod Horizontal Alignment	6-36
6-8.	Checking Master Rod Vertical Alignment	6-37
6-9.	Master Rod Bearing Inspection Chart (Sheet 1 of 4)	6-38
6-10.	Adjusting Measuring Finger of Cylinder Bore Gage	6-44
6-11.	Cylinder Barrel Choke and Cylinder Barrel Skirt Dent Limits	6-45
6-12.	Exhaust Pipe Connection Limits	6-48
6-13.	Piston Pin Deflection Test	6-50
6-14.	Designated Valve Areas	6-52
6-15.	Inspection of Valve Stem	6-53
6-16.	Inspection of Valve Dome	6-54
6-17.	Inspection of Valve Face and Underhead	6-56
6-18.	Inspection of Valve Neck and Dome	6-57
6-19.	Valve Reconditioning Limits	6-57
6-20.	Valve Lock Groove Inspection Limits	6-59
6-21.	Checking Valve Guide Wear and Intake Valve Seat Regrind Limit	6-59
6-22.	Modification of Deflector Pads	6-61
6-23.	Impeller and Inducer Reconditioning Limits	6-65
6-24.	Impeller Shaft Oil Seal Front Sleeve Crack Limits	6-65
6-25.	Gage Assembly Setting Procedure	6-67
6-26.	Internal Spline Tooth Measurement	6-69
6-27.	Pre-Oil Check Valve Assembly	6-70
6-27A.	Oil Strainer Pilot Hole Rework	6-70A
6-28.	Oil Strainer By-Pass Valve Pressure Testing Rig	6-71
6-29.	Magnetic Chip Detector Plug Circuit Tester Wiring Diagram	6-72
6-30.	Removing Bent or Damaged Studs and Installing New Studs	6-84
6-31.	Installing New Bushing	6-85
6-32.	Crankcase Front Section - Rework to Prevent Cracking	6-87
6-33.	Crankcase Front Section Bushing	6-88
6-34.	Removing Retainer and Dowel Pin	6-89
6-35.	Boring Base for Oversize Retainer and Installing Retainer and Dowel Pin	6-90
6-36.	Grinding Bore and Inner Flange Face or Retainer	6-91
6-37.	Oversize Valve Tappet Guide Bore Identification	6-92
6-38.	Intake Tappet Guide Oil Feed Hole Plug Installation	6-93
6-39.	Valve Tappet Guide Copper Plated Areas	6-94
6-40.	Valve Tappet Guide Chromium Plated Areas	6-95
6-41.	Remachining Crankcase	6-96
6-42.	Remachining Front Crankcase	6-97
6-43.	Remachining Crankcase at Tube Connector Hole	6-98
6-44.	Reworking Propeller End of Assembly	6-98
6-45.	Assembling Hydro Oil Tube	6-99
6-46.	Removing Scavenge Pump Drive Shaft Gear Bushing and Installing New Bushing	6-100
6-47.	Finish Bore and Face Bushing Flange	6-101
6-48.	Removing Governor Drive Gear Shaft Bushing and Installing New Bushing	6-101
6-49.	Counterboring and Finish Reaming Bushing	6-102
6-50.	Facing and Chamfering Bushing	6-103
6-51.	Removing Rear Bushing and Pinion Bushing	6-103
6-52.	Removing Propeller Shaft Front Bushing and Sleeve	6-105
6-53.	Installing and Pressure Checking Propeller Shaft Sleeve and Front Bushing	6-106
6-54.	Installing Propeller Shaft Rear Bushing and Pinion Bushing	6-107
6-55.	Installing Rear Bushing Lock Pin and Pinion Bushing Lock Pin	6-107
6-56.	Finish Bore Propeller Shaft Front and Rear Bushing and All Pinion Bushings	6-109
6-57.	Boring Taper in Rear Bushing	6-110
6-58.	Removing Propeller Shaft Bushing	6-111
6-59.	Removing and Installing Propeller Shaft Sleeve	6-112
6-60.	Installing Propeller Shaft Rear Bushing and Lock Pin	6-114
6-61.	Finish Bore Front and Rear Bushings	6-115
6-62.	Form Taper in Rear Bushing	6-116
6-63.	Plating Propeller Shaft Thrust Bearing Spacers	6-117

LIST OF ILLUSTRATIONS (Cont)

Number	Title	Page
6-64.	Honing Bore and Reconditioning Stationary Reduction Gear	6-118
6-65.	Honing Stationary Reduction Gear Support Sleeve (R1820-80)	6-119
6-66.	Machining and Grinding Stationary Reduction Gear Support	6-120
6-67.	Installing and Finish Grinding Stationary Reduction Gear Support Sleeve	6-122
6-68.	Grinding and Checking Concentricity of Pinion Bore with Pitch Diameter	6-123
6-69.	Grinding Reduction Gear Pinion Carrier Trunnions and Thrust End Faces	6-124
6-70.	Reduction Gear Pinion Carrier Trunnion Reconditioning	6-125
6-71.	Grinding Balanceweight Bore and Drive Gear Bore	6-126
6-72.	Remove and Install Cam Support Ring	6-126
6-73.	Remove Cam Bearing and Install Support Bearings	6-127
6-74.	Removing Bushing	6-128
6-75.	Reboring Bushing Holes	6-129
6-76.	Facing Flange and Semi-Finish Boring Bushing	6-129
6-77.	Installing Bushings	6-130
6-78.	Finish Bore Bushing	6-131
6-79.	Balanceweight Drive Gear Trunnion Reconditioning Limits	6-132
6-80.	Balanceweight Trunnion Reconditioning Limits	6-133
6-81.	Ream Balanceweight and Gear Retaining Bolt Holes	6-134
6-82.	Reconditioning Cylinder Mounting Deck Faces	6-136
6-83.	Crankcase Main Section Cap Screw Hole Reconditioning Limits	6-138
6-84.	Dimensions for Altering 90 Degree Countersink and Pilot	6-139
6-85.	Grooving Tool Cutter Dimensions	6-139
6-86.	Grinding Crankcase Main Section Rear Bearing Surfaces	6-141
6-87.	Grinding Rear Main Bearing Liner	6-143
6-88.	Installing Crankcase Rear Main Section Bearing Liner	6-144
6-89.	Finish Grinding Rear Main Bearing Liner	6-145
6-90.	Recondition Propeller Shaft Pilot Journals	6-147
6-91.	Crankshaft Crankpin Grinding	6-148
6-92.	Crankshaft Thrust Face Material	6-151
6-93.	Crankshaft Crankpin Front Thrust Face Grinding	6-151
6-94.	Remove and Grind Front and Rear Counterweight Bushing	6-153
6-95.	Installing Bushings on Front and Rear Counterweights	6-155
6-96.	Removing Front Counterweight Bushing and Rear Counterweight Bearing	6-156
6-97.	Aligning Crankshaft in Fixture Prior to Grinding Counterweight Bushing Holes	6-156
6-98.	Installing Front Crankcase Counterweight Bushing and Rear Crankcase Counterweight Bearings	6-157
6-99.	Finish Ream Rear Crankshaft Counterweight Bearing	6-158
6-100.	Removing Front and Rear Counterweight Bushings and Grinding Holes	6-160
6-101.	Installing Bushings in Front and Rear Counterweights	6-161
6-102.	Removing Front Crankshaft Counterweight Bushing and Rear Crankshaft Counterweight Bearing	6-162
6-103.	Front Crankcase Counterweight Bushing and Rear Crankcase Counterweight Bearings	6-163
6-104.	Finish Reaming Crankshaft Counterweight Bearing	6-164
6-105.	Rear Crankshaft Crankpin Bore Front Thrust Face Grinding	6-165
6-105A.	Rear Crankshaft Crankpin Bore Front Thrust Face Finishing	6-166A
6-106.	Remove Nitride Case Cracks at Clamp Bolt Area	6-167
6-107.	Remove ID Splines and Cut Retaining Ring Groove	6-167
6-108.	Machining Lock Pin Holes and Installing Pin	6-169
6-109.	Shot Peening Knuckle Pin Holes	6-171
6-110.	Regrind Oversize Knuckle Pins	6-173
6-111.	Removing Bushings	6-175

LIST OF ILLUSTRATIONS (Cont)

Number	Title	Page
6-112.	Shot Peening Knuckle/Piston Pin Holes	6-177
6-113.	Install and Burnish New Bushing	6-177
6-114.	Spinning and Facing Bushing	6-178
6-115.	Lead-Tin Plating ID of Bushing	6-180
6-116.	Honing Master Rod Bore for Oversize Bearing	6-181
6-117.	Master Rod Grinding Limits Locking Plate Side and Spacer Side	6-182
6-118.	Grinding Master Rod Hub Journal and End Face	6-183
6-119.	Master Rod Oil Seal-Disc Reconditioning	6-184
6-120.	Crack Inspection Area	6-185
6-121.	Cylinder Flange Reconditioning Limits	6-185
6-122.	Cylinder Barrel Flange to Dome Flush Pin Gage	6-187
6-123.	Cylinder Bore Honing and Lapping Pattern	6-188
6-124.	Lapping Head and Reworked Rings	6-188
6-125.	Cylinder Head Heating and Removal	6-190
6-126.	Cylinder Head Inspection	6-192
6-127.	Checking Master Gage Body and Cylinder Thread Timing Gage	6-193
6-128.	Assembling Cylinder Head and Barrel	6-193
6-129.	Checking Cylinder Barrel Flange Face to Cylinder Head Dome Dimension	6-195
6-130.	Spark Plug Insert Replacement (Sheet 1 of 2)	6-196
6-131.	Installing Cylinder Head Thermocouple Adapter	6-200
6-132.	Removing and Installing Upper Push Rod Housing Connection	6-201
6-133.	Reworking Cracked Cylinder Heads at Target Hole Location	6-201
6-134.	Removing Damaged Cylinder Barrel Fin	6-202
6-135.	Removing and Installing Cylinder Barrel Attaching Fin	6-203
6-136.	Cylinder Head Quadrants	6-205
6-137.	Removing Damaged Cylinder Head Fin	6-205
6-138.	Machine Fins and Weld to Form a Solid Boss	6-206
6-139.	Remachine the Spacer Hole	6-207
6-140.	Installing Thermocouple and Deflector Spacer	6-208
6-141.	Silastic Cylinder Barrel Fin Braces	6-209
6-142.	Silastic Fin Brace at Rear Spark Plug Location	6-210
6-143.	Intake Valve Seat and Guide Replacement (Sheet 1 of 2)	6-213
6-144.	Remove Exhaust Valve Guide Retainer Sleeve	6-216
6-145.	Remove Exhaust Valve Seat and Guide	6-217
6-146.	Bore Valve Seat Recess Back Spotface and Chamfer Bottom of Valve Guide Boss	6-218
6-147.	Exhaust Guide Machining Dimensions	6-221
6-148.	Aluminum Backed Exhaust Valve Guide Chamfer Dimensions	6-222
6-149.	Installing Exhaust Valve Guide and Seat	6-223
6-150.	Installing, Rolling and Chamfering Exhaust Guide Retainer Sleeve	6-224
6-151.	Exhaust Valve Seat Grinding Limits (45 Degrees and 38 Degrees)	6-225
6-152.	Valve Face and Tip Regrind Limits	6-228
6-153.	Valve Face Angle	6-228
6-154.	Cylinder Valve Seat Pressure Test by Pressure Drop	6-229
6-155.	Cylinder Valve Seat Pressure Test by Differential Pressure Drop	6-230
6-156.	Bushing for Intercylinder Deflector Attaching Hole of Rocker Box Covers	6-231
6-157.	Install Bushing in Rocker Arm	6-232
6-158.	Finish Bore Bushing ID	6-233
6-159.	Removing Bushing from Bolt Head and Nut End Sides	6-234
6-160.	Reaming Cylinder for Oversize Bushing	6-234
6-161.	Installing New Bushing in Bolt Head and Nut End Sides	6-235
6-162.	Hand Line Reaming Bushing Holes	6-236
6-163.	Face Bushings Flange in Bolt Head and Nut End Sides	6-236
6-164.	Counterboring Rocker Hub Bolt Bushing	6-237
6-165.	Rocker Arm Assembly Rework	6-238
6-166.	Rocker Arm Bushing Replacement (Sheet 1 of 2)	6-239

LIST OF ILLUSTRATIONS (Cont)

Number	Title	Page
6-167.	Removing Old Roller Pin	6-242
6-168.	Installing New Roller Pin	6-243
6-169.	Weld Drain Boss Detail to Intake Pipe	6-244
6-170.	Drill and Tap Intake Pipe Drain Boss Hole	6-245
6-171.	Cylinder Exhaust Pipe Tooling and Heating	6-246
6-172.	Cylinder Exhaust Pipe Connector or Sleeve Removal	6-246
6-173.	Exhaust Port Machining Limits for Oversize Connection	6-247
6-174.	Cylinder Exhaust Port Connector or Sleeve Machining Limits	6-249
6-175.	Machining Clearance Radius in Exhaust Connection	6-249
6-176.	Cylinder Exhaust Port Connector or Sleeve Installation	6-250
6-177.	Resurfacing Exhaust Port Pad	6-252
6-178.	Reconditioning Wedge-Type Piston Ring Grooves	6-253
6-179.	Inspection of Wedge-Type Ring Grooves After Reconditioning	6-255
6-180.	Grind Valve Tappet Roller Tracks	6-256
6-181.	Grind Valve Tappet Roller ID	6-257
6-182.	Valve Tappet Socket Salvage Reconditioning Limits	6-259
6-183.	Supercharger Front Housing Face Machining	6-260
6-184.	Reworking Supercharger Front Housing Assembly	6-261
6-185.	Honing and Grinding Inside Diameter of Housing Support	6-262
6-186.	Fitting Oil Seal Ring In Front Housing	6-264
6-187.	Replacement of Rear Housing Sleeve	6-264
6-188.	Polishing Face and Honing Inside Diameter of Rear Housing Sleeve	6-266
6-189.	Fitting Oil Seal Ring in Rear Housing	6-267.
6-190.	Front and Rear Impeller Shaft Oil Seal Sleeve Dimensions and Holding Fixture	6-269
6-191.	Removing Impeller Shaft Front and Rear Bushings	6-270
6-192.	Installing Front and Rear Bushings	6-271
6-193.	Finish Bore Front and Rear Bushings	6-272
6-194.	Impeller, Impeller Blade and Inducer Reconditioning Limits	6-274
6-195.	Machining and Balancing Assembly Dimensional Limits	6-276
6-196.	Method of Static Balancing the Impeller	6-277
6-197.	Carburetor Mounting Pad Salvage	6-278
6-198.	Aligning Carburetor Air Inlet Screen and Soldering Intersection	6-279
6-199.	Drain Valve Extension Tube Replacement	6-281
6-200.	Removing Oil Seal Vent Tube and Reaming Diaphragm Bore	6-282
6-201.	Rechasing 9M/M - 1.25M/M Thread	6-283
6-202.	Oil Seal Vent Tube Machining Limits	6-284
6-203.	Installing and Expanding Oil Seal Vent Tube	6-285
6-204.	Oil Sump - Incorporation of Additional Clean-Out Plugs (Sheet 1 of 2)	6-287
6-205.	Installing Oil Sump Strainer Hole Bushing	6-290
6-206.	Diffuser Plate Vane Salvage and Reconditioning	6-291
6-207.	Diffuser Plate Reconditioning	6-294
6-208.	Reworking Supercharger Rear Housing to Diffuser Plate Pilot Diameter	6-295
6-209.	Accessory Drive and Starter Shaft Coupling Spline Rework	6-296
6-210.	Accessory Drive and Starter Shaft Spherical Oil Seal and Retainer Lapping	6-297
6-211.	Grinding Accessory Drive and Starter Shaft Coupling	6-298
6-212.	Impeller Drive Clutch Housing, Machining	6-299
6-213.	Impeller Intermediate Drive Shaft Front and Rear Bushing Replacement (R1820-80 Series) (Sheet 1 of 3)	6-301
6-214.	Impeller Intermediate Drive Shaft Front Bushing Replacement (R1820-76 Series, -86A, -86B)	6-304
6-215.	Intermediate Impeller Drive Gear Bushing Replacement (R1820-76 Series, -86A, -86B)	6-306

LIST OF ILLUSTRATIONS (Cont)

Number	Title	Page
6-216.	Intermediate Impeller Shaft Drive Gear Bushing Replacement (R1820-76 Series, -86A, -86B) (Sheet 1 of 2)	6-308
6-217.	Impeller Low Speed Drive Clutch Cam Bushing Replacement (R1820-76 Series, -86A, -86B)	6-311
6-218.	Reworking Supercharger Impeller Drive Pinion Gear Bushing	6-312
6-219.	Fuel Pump Drive Shaft Support Bushings Replacement (Sheet 1 of 2)	6-313
6-219A.	Fuel Pump Drive Gear Support Assembly Repair	6-316
6-220.	Machining Drain Slot in Supercharger Rear Cover	6-318
6-221.	Reconditioning Supercharger Rear Housing Cover at Plug Boss	6-319
6-222.	Supercharger Rear Housing Rework at Magnetic Drain Plug Adapter Boss	6-320
6-223.	Supercharger Rear Cover Oil Strainer Pilot Hole, Rework	6-321
6-223A.	Oil Strainer Pilot Hole Bushing	6-321
6-224.	Supercharger Rear Housing Cover Bushings	6-322
6-225.	Remove, Install and Finish Bore Bushing at Pad A	6-322
6-226.	Tap Drill, Tap and Remove Thrust Button at B and C	6-324
6-227.	Remove, Install, Finish Bore and Quarter Cut Bushings at Pads D and E	6-325
6-228.	Enlarging Bore and Installing Thrust Button at Pads B and C	6-327
6-229.	Removal, Installation and Finish Bore Bushing at Pad F	6-328
6-230.	Tap Drill, Tap and Remove Thrust Button at Pad G	6-330
6-231.	Remove, Install, Finish Bore and Quarter Cut Bushing at Pad H	6-331
6-232.	Enlarge Bore and Install Thrust Button at Pad G	6-332
6-233.	Removal, Installation, Finish Facing and Countersink and Finish Bore at Pad I	6-334
6-234.	Remove, Install, and Finish Bore Bushing at Pad J	6-335
6-235.	Installing Bushing and Reworking Supercharger Rear Cover Magneto Pads	6-337
6-236.	Manufacturing Steel Shims for Generator Pad	6-339
6-237.	Reworking and Reconditioning Worn Generator Mounting Pads	6-340
6-238.	Installation and Rework of Bushing for Impeller Drive Gear Support or Supercharger Clutch Counterbore	6-341
6-239.	Tachometer Drive Shaft Gear Small Bushings Replacement (Sheet 1 of 2)	6-343
6-240.	Reworking Hydraulic and Tachometer Pads on Engine Dual Accessory Drain Housing	6-345
6-241.	Dual Accessory Drive Housing and Cover Bushings Replacement (Sheet 1 of 2)	6-347
6-242.	Oil Strainer By-Pass Valve Reconditioning	6-350
6-243.	Reworking Oil Strainer Housings	6-351
6-244.	Magnetic Chip Detector Plug Reconditioning	6-352
6-245.	Propeller Shaft Thrust Bearing Nut	6-352
6-246.	Supercharger Clutch Oil Control Valve Rework	6-353
6-247.	Propeller Shaft Reconditioning by Chrome Plating	6-354
6-248.	Propeller Shaft Machining Dimensions	6-355
6-249.	Crankcase Front Section Flange	6-356
6-250.	Grinding Crankcase Front Main Section Retaining Ring	6-357
6-251.	Crankshaft Main Bearing Journals and Thrust Faces	6-358
6-252.	Crankshaft Salvage Limits	6-359
6-253.	Master Rod	6-360
6-254.	Crankcase Main Section	6-360
6-255.	Supercharger Drain Valve Return Tube	6-361
6-256.	Fuel Pump Drive Gear Shaft	6-361
6-257.	Generator Drive Gear	6-362
6-258.	Dual Accessory Drive Gear	6-362
6-259.	Magneto Drive Shaft	6-363
6-260.	Accessory Drive and Starter Shaft Reconditioning Limits	6-363

LIST OF ILLUSTRATIONS (Cont)

Number	Title	Page
6-261.	Reconditioning Accessory Drive and Starter Shaft Oil Retaining Plug	6-364
6-262.	Accessory Drive and Starter Shaft Pilot	6-364
6-263.	Front and Rear Counterweights Copper Plating Limits	6-365
6-264.	Crankshaft Identification and Hardness Check	6-366
6-265.	Crankshaft Rear End Reconditioning	6-366
6-266.	Insulating Crankshaft for Resin Coating and Chromium Plating Stripping	6-367
6-267.	Insulating Crankshaft for Bronze Plating Stripping	6-368
6-268.	Nitriding Crankshaft Front and Rear	6-369
6-269.	Chromium Plate Crankshaft Main Bearing Journals	6-370
6-270.	Polish Nitrided Wear Surfaces	6-371
6-271.	Crankshaft Crankpin Clamping Surface, Copper Plating	6-372
6-272.	Knuckle Pin Lock Plate	6-374
6-273.	Copper and Chrome Plating Valve Tappet Guide	6-375
6-274.	Machining Cam Support After Plating	6-376
6-275.	Copper Plating Supercharger Clutch Oil Control Valve Sleeve and Pin Assembly	6-377
6-276.	Thickness of Silver Plate Prior to Shot-Peen Bond Testing	6-389
6-277.	Alman A-2 Arc Height-Inches	6-390
6-278.	Volume Percent Baume' Chart	6-442
7-1.	Magnetic Field Indicator Scales, Acceptable Limits	7-2
7-2.	Various Lockwiring Procedures	7-3
7-3.	Tabwasher and Cotter Pin Applications	7-5
7-4.	Torquing Reduction Driving Gear Pinion Lock Nut and Checking Side Clearance (R1820-76 Series, -86A and -86B)	7-6
7-5.	Reduction Drive Gear Pinion Nut Cotter Pin Installed (R1820-76 Series, -86A and -86B)	7-7
7-6.	Propeller Shaft Assembly in Fixture (R1820-80 Series)	7-8
7-7.	Torquing Governor Drive Gear to Shaft Screws	7-8
7-8.	Torquing Stationary Reduction Gear Slotted Nuts (R1820-76 Series, -86A and -86B)	7-9
7-9.	Installing Propeller Shaft Thrust Bearing Spacer	7-10
7-10.	Installing Stationary Gear Support and Thrust Bearing Spacer on Propeller Shaft Assembly (R1820-80 Series)	7-11
7-11.	Stand Assembly for Propeller Hydraulic Leakage Test	7-12
7-12.	Adapter Plate for Checking Propeller Hydraulic Passages	7-12
7-13.	Torquing Counterweight Attaching Bolt Nuts	7-14
7-14.	Tightening Knuckle Pin Bolt Nuts and Measuring Width of Master Rod Assembly	7-16
7-15.	Installing Spreader Screw, Plug and Stop	7-17
7-16.	Measuring Distance from Front Main Bearing Journal to Rear Main Bearing Journal and Rear Surface of Front Crankcheek and Front Surface of Rear Crankcheek	7-18
7-17.	Setting Master Rod End Clearance and Measuring Free Length of Crankcheek Screw	7-19
7-18.	Checking Crankshaft Runout	7-19
7-19.	Tightening Crankcheek Screw and Installing Cotter Pin	7-20
7-20.	Torquing Governor Driving Gear to Cam Intermediate Drive Gear Screws	7-22
7-21.	Timing Marks Aligned on Cam Assembly (R1820-76 Series, -86A and -86B)	7-22
7-22.	Installing Cam Retainer and Proper Placement of Timing Mark on Assembly (R1820-80 Series)	7-23
7-23.	Cam and Second Order Balance-weight Mechanism Correctly Timed (R1820-80 Series)	7-25
7-24.	Installing Crankcase Main Section Dowels	7-26
7-25.	Checking the Gap and Side Clearance of Reduction Drive Gear Spacer Oil Seal Rings	7-26

LIST OF ILLUSTRATIONS (Cont)

Number	Title	Page
7-26.	Installing Reduction Drive Gear Spacer in Crankcase Front Main Section	7-27
7-27.	Installing Cam and Second Order Balanceweight Assembly (R1820-80 Series)	7-28
7-28.	Installing Rocker Arm Bearing	7-29
7-29.	Checking Piston Ring Side Clearance at Nos. 1, 2 and 3 Ring Grooves	7-30
7-30.	Piston Pin Plug Installing Tool	7-31
7-31.	Measuring Distance Between Supercharger Front and Rear Housings	7-32
7-32.	Torquing Diffuser Plate Nuts	7-34
7-33.	Measuring Impeller Side Clearance (A) and Impeller to Diffuser Plate Forward Clearance (B) Inspection Report	7-35
7-33A.	Impeller Clearance Inspection Report	7-36A
7-34.	Impeller Shaft Tri-Segmented Carbon Oil Seal Ring	7-36
7-35.	Impeller and Inducer Tied Together	7-38
7-36.	Torquing Impeller Shaft Nut	7-38
7-37.	Installing Springs and Pins in Accessory Drive and Starter Shaft	7-40
7-38.	Torquing Magneto Drive Gear to Shaft Screws	7-40
7-39.	Torquing Fuel Pump and Dual Accessory Drive Gear to Shaft Screws	7-41
7-40.	Using Multi-Plate Clutch Housing Installing Tool (R1820-76 Series, -86A, -86B)	7-42
7-41.	Installing Fuel Pump Drive Shaft Oil Seal and Drive Shaft	7-43
7-42.	Installing Dual Accessory Drive Oil Seals	7-44
7-43.	Installing Oil Pressure Relief Valve Body	7-45
7-44.	Finish Machining Oil Pump Check Valve Body	7-46
7-45.	Checking End Clearance of Oil Pump Drive Shaft Gear and Driven Gear	7-47
7-46.	Tightening Oil Pump	7-47
7-47.	Installing Tachometer Drive Shaft Oil Seal	7-49
7-48.	Impeller Drive Gear Shaft and Pinion Support Installed (R1820-80 Series)	7-50
7-49.	Checking Impeller Shaft End Movement	7-51
7-50.	Impeller Drive Sprag Clutch	7-53
7-51.	Installing Supercharger Rear Cover	7-54
7-52.	Checking End Clearance of Impeller Intermediate Drive Shaft (R1820-76 Series, -86A, -86B)	7-55
7-53.	Installing Magneto Drive Gear Oil Seal	7-55
7-54.	Checking End Play of Accessory Drive and Starter Shaft	7-56
7-55.	Measuring Distance from Starter Pad to Face of Starter Coupling	7-56
7-56.	Puller Screw Washer, Head and Strainer Cover Location	7-59
7-57.	Supercharger Drain Valve Assembly	7-60
7-58.	Supercharger Drain Valve Circlet Installation	7-60
7-59.	Torquing Oil Pump to Supercharger Rear Cover Nuts and Foot Nut	7-61
7-60.	Installing Tachometer Drive Shaft Gear Housing Cover	7-62
7-61.	Dual Accessory Drive Housing Attaching Nuts and Cover Installing Tools in Place	7-62
7-62.	Compressor, Impeller Shaft Bearing Support Attaching Screws	7-63
7-63.	Torquing Supercharger Front Housing to Crankcase Rear Main Section Bolts	7-65
7-64.	Checking End Clearance of Front Oil Pump Gears	7-66
8-1.	Raising Crankshaft Assembly from Stand	8-2
8-2.	Lowering Crankshaft Assembly into Crankcase Rear Main Section	8-2
8-3.	Typical Installation of Cam Aligning Tool	8-3
8-4.	Induction Heater Wiring Diagram	8-5
8-5.	Reduction Driving Gear Lock Nut Screw Cotter Pin	8-6
8-6.	Checking Cam Timing	8-7
8-7.	Lowering Crankcase Front Section	8-9
8-8.	Installing Cylinder	8-10
8-9.	Installing Cylinder Capscrews	8-11

LIST OF ILLUSTRATIONS (Cont)

Number	Title	Page
8-10.	Installing Cylinder Capscrew Locking Plate	8-12
8-11.	Method of Lockwiring Cylinder Hold-Down Capscrew	8-13
8-12.	Push Rod Housing Inner Packing Ring and Washer Installing Tool	8-14
8-13.	Torquing Push Rod Housing Adapter Nuts	8-15
8-14.	Torquing Push Rod Housing Outer Nut	8-16
8-15.	Front Oil Sump Drive Shaft Aligning Tool Installed	8-17
8-16.	Aligning Front Oil Sump Drive Shaft and Driving Gear	8-17
8-17.	Torquing Rocker Arm Hub Bolt Nut	8-18
8-18.	Adjusting Valve Clearance	8-20
8-19.	Torquing Adjusting Screw Lock Screw	8-22
8-20.	Checking Valve Clearance Adjusting Screw Breakaway Torque	8-22
8-21.	Upper Intake Pipes, Height Check	8-23
8-22.	Aligning Impeller Front Oil Seal Rings	8-25
8-23.	Installing Oil Sump External Oil Tube	8-26
8-24.	External Hydro-Oil Supply Rear Tube and Clamp	8-27
8-25.	Pivot Arm Template	8-28
8-26.	Piston Position Indicator at 20 Degrees Before Top Center	8-29
8-27.	Aligning Step on Cam to Timing Post With Straight Edge	8-2 9
8-28.	Removing Magneto Drive Shaft Coupling Nut	8-3 J
8-29.	Lead Attached to Primary Coil Attaching Screw	8-3 J
8-30.	Priming Tube Installation	8-32
8-31.	Tightening Thrust Bearing Nut	8-34
9-1.	Torque Wrench Extension Calibration	9-2
9-2.	Limits and Lubrication Chart (Sheet 1 of 10)	9-38
10-1.	Test Stand Curve (R1820-76 Series, -86A, -86B)	10-5
10-2.	Test Stand Curve (R1820-80 Series)	10-6
10-3.	Oil Flow Correction Curve	10-8
10-4.	Post Overhaul Acceptance Curve (R1820-76 Series, -86A, -86B) (Sheet 1 of 2)	10-9
10-5.	Post Overhaul Acceptance Curve (R1820-80 Series) (Sheet 1 of 2)	10-1
10-6.	Air Density - Black Angle Curve	10-15

LIST OF TABLES

Number	Title	Page
List of Applicable Change Directives		
1-1.	Engine Specification	1-1
2-1.	AGE Functional Tool List	2-1
2-2.	AGE Numerical Tool List	2-74
5-1.	Cleaning Chart	5-16
6-1.	Inspection Index	6-2
6-2.	General Inspection Terminology	6-7
6-3.	Special Inspection of Engine Subjected to Overspeed	6-10
6-4.	Parts to be Magnetic Particle Inspected	6-14
6-5.	Magnetic Particle Inspection Limits for Anti-Friction Bearings	6-20
6-6.	Anti-Friction Bearing Inspection Limits	6-25
6-7.	Cage Clearance and Internal Radial Looseness Limits	6-29
6-8.	Repair and Replacement	6-73
6-9.	Blend Symbol	6-79
6-10.	Blending Chart	6-80
6-11.	Materials Identification and Sources of Supply	6-81
6-12.	Counterweight Bushing Grinding Limits	6-154
6-13.	Knuckle Pin Grinding Limits	6-174
6-14.	Calculation Formulas	6-432
9-1.	Torque Values - Stepped Studs and Straight Studs	9-4
9-2.	Studs	9-5
9-3.	Screw Bushings	9-7
9-4.	Taper Pipe Thread Plugs	9-7
9-5.	Slotted Head Screws	9-8
9-6.	Hexagon Head Screw Nuts (Plain, Slotted, Self Locking)	9-8
9-7.	Straight Thread Plugs (Solid Metal Gasket)	9-8
9-8.	Fluid Fittings, Jam Nuts and Bolts Used With Gaskets in Boss Type Applications	9-8
9-9.	Nuts - Retaining	9-9
9-10.	Coupling Nuts	9-9
9-11.	Standard Practices for Special Applications	9-10
9-12.	Straight Thread Plugs (Metal-Fibre Gasket)	9-10
9-13.	Nuts - Ignition Connections	9-11
9-14.	Cylinder Hold-Down Screw	9-11
9-15.	Table of Limits	9-12
10-1.	Test Schedule	10-4
10-2.	Acceptance Schedule	10-4
10-3.	Engine Operating Limits for Block Test of Overhauled Engines	10-7

INTRODUCTION

This manual was prepared under the technical cognizance of Naval Air Rework Facility, Jacksonville. Comments and recommendations pertaining to this manual shall be submitted to Commanding Officer, Naval Air Rework Facility (Code 312), Naval Air Station, Jacksonville, Florida 32212.

This manual contains overhaul instructions for Models R1820-76A, -76B, -76C, -76D, -80, -80A, -80B, -86A and -86B aircraft engines manufactured by the Curtiss-Wright Corporation, Wright Aeronautical Division, Wood-Ridge, New Jersey. All instructions contained herein will apply to all models, unless otherwise specified.

TABLE OF CONTENTS. The table of contents presents, in sequence, the numbers and titles of sections and primary paragraphs with the initial page numbers.

LIST OF ILLUSTRATIONS. This list presents, in numerical sequence, the title and initial page number of each figure.

LIST OF TABLES. This list presents, in numerical sequence, the title and initial page number of each table.

INTRODUCTION. The introduction is a statement covering the purpose, scope, and arrangement of this manual, and a numerical list of modification directives.

SECTION I - GENERAL INFORMATION. This section contains general information designed to further the understanding of depot level maintenance personnel in regard to the engine plus an engine description that has been coordinated with latest available Illustrated Parts Breakdown.

SECTION II - LISTING OF AEROSPACE GROUND EQUIPMENT (AGE). This tabular list presents all AGE approved by the using service in performing depot level work. Common tools are not listed. Reference to AGE in other parts of the manual are by group number. The main control of the list is determined by its function. The group and the tools within a group are listed alphabetically. Following the tabular list is a numerical index by part number showing what group that tool is used in. Following the numerical index, any necessary illustration pertaining to AGE tools may be found.

SECTION III - DISMANTLNG. This section covers special procedures of removing the engine from the shipping container and the sequence of dismantling into major subassemblies.

SECTION IV - DISASSEMBLY OF SUBASSEMBLIES. This section is limited in scope to the extent necessary to clean, inspect, and test parts, assemblies and subassemblies. Illustrations used show the sequence of disassembly.

SECTION V - CLEANING. This section describes peculiar cleaning methods and materials not covered in existing technical manuals.

SECTION VI - INSPECTION AND REPAIR. Special inspection procedures and regular inspection procedures including methods and equipment are presented. Repair procedures are sub-sectioned independently following the inspection procedures.

SECTION VII - ASSEMBLY OF SUBASSEMBLIES. Including safetying methods and devices, plus inwork progress testing of subassemblies are presented.

SECTION VIII - FINAL ENGINE ASSEMBLY. This completes the assembly necessary prior to engine performance test.

SECTION IX - DIMENSIONAL LIMITS AND TORQUE VALUES. This tabularized section contains maximum and minimum dimensional limits and torque values by reference number.

Reference numbers are used in sequence as they occur, throughout the text.

SECTION X - FINAL TEST. This section contains the depot level instructions for conducting tests of the complete engines, including testing conditions, test set-up and operating procedures of applicable AGE.

SECTION XI - TROUBLESHOOTING. This section provides detailed instructions to determine, isolate, and remedy performance difficulties on the engine and engine systems. The information is arranged in order of most likely occurence.

SECTION XII - PRESERVATION AND STORAGE. This section includes instructions for preserving the engine and preparing it for storage.

ALPHABETICAL INDEX. To facilitate ready reference to various operations for any system, component or accessory, this section includes both noun nomenclature and functional operation which implies some cross-referencing. Only paragraph numbers are given.

ABBREVIATIONS. The abbreviations used throughout this manual are as follows:

ABBREVIATIONS	FULL NAME
ABC	After Bottom Center
ATC	After Top Center
BBC	Before Bottom Center
BMEP	Break Mean Effective Pressure
BTC	Before Top Center
CAT	Carburetor Air Temperature
CHT	Cylinder Head Temperature
dia	Diameter
fir	Full Indicator Reading
gal	Gallon
ID	Inside Diameter
in.	Inch
in.-lb	Inch-pound
MAP	Manifold Absolute Pressure
max	Maximum
min	Minimum
No.	Number
OD	Outside Diameter
OS	Oversize
oz	Ounce
psi	Pounds Per Square Inch
Ref	Reference
rms	Root Mean Square
RPM	Revolutions Per Minute (Engine Speed)
rpm	Revolutions Per Minute (Machine Speed)
std	Standard
TDC	Top Dead Center
thd	Thread

LIST OF APPLICABLE CHANGE DIRECTIVES

ACTIVITY AND TD NUMBER	DATE	TITLE	REISSUE/ REV. DATE
EB 490 Amend I	31 Jun 62	Magneto Drive Gear, Plugging	1 Sep 77
EB 500	27 Jan 58	Supercharger Front Housing Mounting Bolt Bushing; Provision for	15 May 70
EB 511 Rev B	15 May 67	Crankshaft Rear End, Removal of Nitride Case Cracks at Clamp Bolt Area (ECP 28210 A, R, AH, 31909C, 34107, A)	1 Sep 77
EB 523	13 Nov 59	Cylinder Head Baffle Bolt Spacer-Boss; Rework of (ECP 30453A)	15 May 70
EB 533 Amend 2	4 Jun 65	Cannon Type Magnetic Chip Detector Sump Plug; Installation of (ECP 21465)	1 Sep 77
EB 561 Rev A	16 Apr 65 18 Oct 68	Pre-Oil Check Valve; Provision for	15 May 70 15 May 70
EB 566 Rev A	20 Oct 61	Application of Silastic Compound to Cylinder Barrel Cooling Fins	15 May 70 1 Sep 77
EB 567	3 Nov 61	Cylinder Machining and Studding Assemblies-Incorporation of Additional Fin Bracing and Breakedge and Blend Requirements	15 May 70
EB 580	25 Jul 61	Crankcase Front Section; Rework to Prevent Cracking	1 Sep 77
EB 594	23 Jul 62	Supercharger Rear Cover Rework at Dual Accessory Drive Pad; Provision For Drain Slot (ECP 33595)	1 Sep 77
EB 612 Amend I	27 Sep 65	Conversion of R1820-76A/B, -80 Model Engines to -76C/D, -80A and -80B Models; Information Pertaining to (ECP 33759D)	1 Sep 77
PPB 637 Amend I Rev A	13 Mar 67 15 Apr 68	Rocker Arm Adjusting Screw Lock-screw Tightening Procedure and Revised Valve Clearance Limits	15 May 70 1 Sep 77
PPC 21 Amend I	8 Mar 68 4 Sep 73	Impeller Drive Sprag Clutch (ECP 32805P, U)	15 May 70 1 Sep 77
PPC 25	29 Apr 68	Rocker Arm Complete Assemblies Incorporating Improved Sleeve Type Bearing; Provision for	15 Sep 73
PPC 27	15 Jun 67	Rocker Arm Hub Bolt, Inspection (ECP 4461)	15 May 70

LIST OF APPLICABLE CHANGE DIRECTIVES (CON'T)

ACTIVITY AND TD NUMBER	DATE	TITLE	REISSUE/ REV. DATE
PPC 42	28 Apr 69	Accessory Drive and Starter Shaft Coupling, Increases Spline Chamfer and Breakedge Radius; Provision of	1 Sep 77
PPC 47	31 Aug 70	Impeller Shaft Oil Seal Ring and Sleeve Assembly; Provision for a Tri-Segmented Carbon Ring Configuration (ECP 34368L, M)	1 Oct 70
PPC 55	1 Apr 71	Cam Retainer to Cam, Balance weight and Oil Sump Scavenge Pump Drive Support Bolt; Provision for Stronger (ECP 34368L)	1 Dec 71
PPC 56	12 Feb 73	Oil Sump; Provision for Additional Clean-Out Plugs (ECP 33863 C, F, G)	1 Dec 71
PPC 57	7 Aug 72	Balanceweight and Gear Retaining Bolt Nut Lock (ECP 34388A)	15 Jun 72
PPC 58 Amend I	11 Dec 72 11 Sep 75	Generator Attaching Nut; Provision for a 12-Point Self-Locking Nut with a Captive Washer (ECP 34471A)	1 May 72 1 Sep 77
PPC 60	11 Sep 72	Cylinder Air Deflector With Provision for Propeller Control Cable (ECP 32756AP)	15 Aug 72
PPC 61 Rev A	18 Aug 72 3 Dec 73	Exhaust Pipe Connection; Provision for Longer Pilot and Three Bolt Attachments (ECP 32756BB)	15 Aug 72 1 Sep 77
PPC 63	15 Oct 71	Spark Plug Insert; Improved Retension of (ECP 32461BH)	15 Jul 72
PPC 65	15 Apr 72	Oil Pump Assembly; Provision for Increased Capacity (ECP 33706M)	15 Aug 72
PPC 66	13 Nov 72	Aluminum Backed Exhaust Valve Guide; Provision for (ECP 33547AH)	15 Aug 72
PPC 67	18 Dec 72	Modernize R1820 Engine Models, Provision for (ECP 34599)	1 Sep 77
ALAMEDA			
LES 60-0-0050	8 Nov 66	Supercharger Rear Cover Gasket; Installation of	1 Jun 67
JACKSONVILLE			
LES 312-68	16 Oct 68	Cylinder Head Exhaust Valve Guide; Replacement by Alternate Method	15 May 70
LES 322-68	17 Oct 68	Supercharger Impeller; Rework of	15 May 70

LIST OF APPLICABLE CHANGE DIRECTIVES (CON'T)

ACTIVITY AND TD NUMBER	DATE	TITLE	REISSUE/ REV. DATE
LES 3-69	17 Jan 69	Post Overhaul Test Run Oil Flow limits	15 May 70
LES 55-69	11 Feb 69	Cam and Balanceweight Support Assembly; Reconditioning	15 May 70
LES 232-69	3 Jul 69	Valve Rocker Arm Spacer (P/N 139153); Rework of	15 May 70
LES 311-69	10 Sep 69	Supercharger Impeller Drive Pinion Gear Bushing; Rework of	15 May 70
LES 344-70	10 Nov 70	Tri-segmented Oil Seal Ring; End Gap Check of	1 Sep 77
LES 97-72	10 Jul 72	Impeller Shaft Oil Seal Ring; End Clearance Change	15 Sep 73
LES 41-73	13 Aug 73	Increased Capacity Rear Oil Pump; Overhaul Instructions	1 Sep 77
LES 169-73	14 Jun 73	Rear Oil Pump Check Valve; Retaining Ring	1 Sep 77
LES 189-73	5 Jul 73	Intake Pipe to Cylinder Attaching Flange Bolt Hole; Helicoil Insert	1 Sep 77
LES 237-73	3 Dec 73	Engine Fuel Pump Drive Gear Support Assembly; Repair of	1 Sep 77
LES 21-74 REV A	4 Dec 74	Crankshaft Rear End; Oil Passage Cleaning	1 Sep 77
LES 29-74	15 Mar 74	Exhaust Valve Guides; Reuse of	1 Sep 77
LES 38-74	20 Mar 74	Exhaust Valve Seats; Limited Oversizes for	1 Sep 77
LES 52-74	10 Apr 74	Master Connector Rod Hub; Reconditioning of	1 Sep 77
LES 52-74 Amend 2	4 Sep 74		
LES 65-74	6 May 74	Crankshaft Crankpin; Increased Grinding Limits	1 Sep 77
LES 68-74	7 May 74	Rear Crankshaft Oil Hole; Nonfunctional-Plugging	1 Sep 77
LES 80-74	4 Jun 74	Bushings; Pressing Out in lieu of Boring	1 Sep 77
LES 113-74 Amend I	14 Aug 74	Crankshaft Crankpin; Reconditioning of	1 Sep 77
LES 114-74	5 Aug 74	Cylinder Heads; Additional Inspection of	1 Sep 77
LES 163-74	24 Oct 74	Cylinder Head Combustion Chamber; Acceptable Surface Damage Limits of	1 Sep 77
LES 167-74	1 Nov 74	Engine Test Cell Oil Filteration; Requirements for	1 Sep 77

LIST OF APPLICABLE CHANGE DIRECTIVES (CON'T)

ACTIVITY AND TD NUMBER	DATE	TITLE	REISSUE/ REV. DATE
LES 182-74	26 Nov 74	Cylinder Head Exhaust Connection Boss Thread; Repair of	1 Sep 77
LES 195-74	4 Dec 74	Intake Valves; Reconditioning of	1 Sep 77
LES 207-74	17 Dec 74	No. 5 and No. 6 Air Deflector, Crack Rework	1 Sep 77
LES 208-74	17 Dec 74	Supercharger Rear Housing Sleeve and Impeller Shaft Bearing Support; Finish Machining of	1 Sep 77
LES 210-74	18 Dec 74	Cylinder Head Spark Plug Boss; Rework of	1 Sep 77
LES 9-75	15 Jan 75	Cylinder Head Damage; Repair of	1 Sep 77
LES 14-75	23 Jan 75	Magnetic Particle Fluid Application Technique	1 Sep 77
LES 22-75	28 Feb 75	Crankshaft Crankpin Clamping Surface; Copper Plating of	1 Sep 77
LES 29-75	10 Mar 75	Valve Tappet Rollers; Magnaflux Inspection of	1 Sep 77
LES 31-75	10 Mar 75	Sludge Plug Installation; Revised Procedure	1 Sep 77
LES 92-75	18 Jun 75	Post Overhaul Run-in Schedule; Change In	1 Sep 77
LES 95-75	18 Jun 75	Exhaust Port Studs; Replacement of	1 Sep 77
LES 96-75	18 Jun 75	Crankshaft Extension Journals; Undersize Grinding of	1 Sep 77
LES 102-75	31 Jul 75	Intake Valve; Ultrasonic inspection of	1 Sep 77
LES 110-75	22 Jul 75	Cylinder Barrel Bore; Reconditioning	1 Sep 77
LES 111-75	22 Jul 75	Exhaust Guide Boss Hole; Increase in Surface Finish Limits	1 Sep 77
LES 113-75	22 Jul 75	Knuckle Pin Retaining Bolts; Crimping of	1 Sep 77
LES 117-75	30 Jul 75	Exhaust Valve Guide; Replacement Criteria of	1 Sep 77
LES 152-75	15 Sep 75	Spacer, Master Connecting Rod; Reconditioning	1 Sep 77
LES 330-10	3 Dec 75	Gear Dual Accessory Drive; Reconditioning of	1 Sep 77
LES 330-15	15 Dec 75	Cam Support Assembly; Reconditioning of	1 Sep 77
LES 330-20	4 Mar 76	Spark Plug Insert; Integrity Check of	1 Sep 77
LES 330-22	5 Mar 76	Cam Support Assembly, Plasma Spray; Reconditioning of	1 Sep 77

LIST OF APPLICABLE CHANGE DIRECTIVES (CON'T)

ACTIVITY AND TD NUMBER	DATE	TITLE	REISSUE/ REV. DATE
LES 330-27	15 Dec 75	R1820-80A, -80B Engine Overhaul; Incorporation of PPC 4 Cylinders	1 Sep 77
LES 330-28	15 Dec 75	Engine Intake Pipes; Selection of Nos. 3 and 7 Locations	1 Sep 77
LES 330-41	14 Jan 76	External Hydro Oil Supply Extension; Moisture; Abrasion Protection for	1 Sep 77
LES 330-46	22 Jan 76	Supercharger Rear Cover and Pressure Oil Strainer Mating Surfaces; Rework of	1 Sep 77
LES 330-61	6 Feb 76	Crankshaft Rear; Retaining Ring Groove Correction	1 Sep 77
LES 330-65	5 Mar 76	Impeller Clutch Cam; Inspection of	1 Sep 77
LES 330-72	4 Mar 76	R1820-86 A/B Oil Drain Hole, Supercharger Rear Cover; Opening of	1 Sep 77
LES 330-75	4 Mar 76	R1820-76/-86 Valve Tappet Guide; Substitute for	1 Sep 77
LES 330-77	8 Mar 76	Master Connecting Rod Bearing Bore; Inspection and Wear Limits of	1 Sep 77
LES 330-79 Rev A	7 May 76	Reduction Gearing, Inspection (R1820-76 Series, -80 Series, -86A, -86B).	1 Sep 77
LES 330-80	12 Mar 76	Crankcase Front Section Liners and Retainers; Grinding of	1 Sep 77
LES 330-83	7 Apr 76	Pistons; Revised Criteria for Reuse	1 Sep 77
LES 330-91	14 Apr 76	Cylinders; Air Leakage Test	1 Sep 77
LES 330-92	13 May 76	Oil Pressure; Requirements for R1820-80A, -80B Engines	1 Sep 77
LES 330-93 Rev A	10 Aug 76	Generator Drive Gear; Service Wear Limits for	1 Sep 77
LES 330-97	5 Aug 76	Oil Strainer Cover; Lockwiring of	1 Sep 77
LES 330-100	5 May 76	Supercharger Clutch Oil Control; Repair of	1 Sep 77
LES 330-102	10 Aug 76	Impeller Multi-clutch Plate and Disc; Inspection of	1 Sep 77
LES 330-103	20 May 76	Master Connecting Rod; Rework of Bearing Bore	1 Sep 77
LES 330-106	13 Aug 76	Supercharger Clutch Oil Control System; Rework of	1 Sep 77
LES 330-121	31 Aug 76	Clutch Oil Pressure; Requirements to Increase	1 Sep 77

LIST OF APPLICABLE CHANGE DIRECTIVES (CON'T)

ACTIVITY AND TD NUMBER	DATE	TITLE	REISSUE/ REV. DATE
LES 330-127	13 Sep 76	Crankcase Main Section; Plasma Spray Repair of	1 Sep 77
LES 330-132	28 Jul 76	Propeller Shaft, Thrust Bearing Spacer Journal Inspection	1 Sep 77
LES 330-134	5 Aug 76	Spark Plug Insert; Integrity Check of	1 Sep 77
LES 330-136	4 Aug 76	Impeller Shaft (P/N 148034); Spline Plating	1 Sep 77
LES 330-139	11 Aug 76	Impeller Shaft Rear Oil Seal Sleeve, (P/N 149575); Inspection for Misidentified Parts	1 Sep 77
LES 330-141	18 Aug 76	Impeller Drive Shaft Gear Washer (P/N 145206); Inspection Criteria	1 Sep 77
LES 330-142	23 Aug 76	Spark Plug Insert; Leakage Check	1 Sep 77
LES 330-147	31 Aug 76	Impeller Shaft Thrust Ring (P/N 134956N1); Conical Surface Wear	1 Sep 77
LES 330-152	28 Sep 76	Clutch Oil Control Valve; Rework of	1 Sep 77
LES 330-158	17 Sep 76	Master Rod; End Clearance	1 Sep 77
LES 330-169	14 Oct 76	Spark Plug Insert; Installation of	1 Sep 77
LES 330-171	26 Oct 76	Parts Reconditioning; Plasma Spray Requirements for	1 Sep 77
LES 330-180	15 Nov 76	Crankshaft Rear Main Bearing Nut; Rework and Installation of	1 Sep 77
LES 330-188	30 Nov 76	Governor Drive Gear Shaft Plug (P/N 120678); Deletion of	1 Sep 77
REI 987-66	25 Oct 66	Cylinder Air Deflector Clamp; Wear Limits	1 Jun 67
REI 1153-66	10 Nov 66	Ignition Harness; Cleaning	1 Jun 67
REI 53-67	30 Jan 67	Rocker Arm Hub Bolt; Inspection	15 May 70
REI 174-67	1 May 67	Inspection/Disposition of Rocker Arm Hub Bolts with Ground Threads	1 Jun 67
REI 178-67	7 Apr 67	Rocker Arm Hub Bolt; Inspection	1 Jun 67
REI 512-68	10 Oct 68	Cylinder Head Exhaust Valve Guide Replacement by Alternate Method	1 Dec 70

LIST OF APPLICABLE CHANGE DIRECTIVES (CON'T)

ACTIVITY AND TD NUMBER	DATE	TITLE	REISSUE/ REV. DATE
REI 51-69	8 Feb 69	Magnetic Inspection Requirements; Engine Parts	1 Oct 70
REI 17-73	1 Aug 73	Aluminum Backed Exhaust Guide; Installation Aid of	15 Sep 73
REI 31-73	1 Aug 73	High Capacity Oil Pump Scavenger Oil Screen; Cleaning of	15 Sep 73
REI 44-73	11 Apr 73	Valve Tappet Rollers; Hardened (P/N 149416)	1 Sep 77
REI 179-73	27 Feb 73	Pistons; Corrision Limits	1 Sep 77
REI 1137-73	26 Sep 73	Accessory Drive & Starter Shaft; Inspection of	1 Sep 77
REI 1312-73	16 Nov 73	Rocker Arm; Reconditioning	1 Sep 77
REI 215-74	25 Feb 74	Crankshaft Rear Coupling Locking Pin Holes; Machining of	1 Sep 77
REI 553-74	26 Apr 74	Engine Parts, Chrome Plating; Penetrant Inspection of	1 Sep 77
REI 580-74	7 May 74	Master Rod (Spacer Side); Grinding of Hub	1 Sep 77
REI 1047- 74	21 Aug 74	Coupling Starter, Root Jaw Cracks; Rework of	1 Sep 77
MCR No. 1	1 Jul 74	Worn Engine Parts; Reconditioning by Plating	1 Sep 77
MCR No. 2	1 Aug 74	Exhaust Valve Guide O.D.; Insufficient Breakedge Radius of	1 Sep 77
MCR No. 3	1 Sep 75	Exhaust Valve Guide; Machining Limits Change of	1 Sep 77
MCR No. 4	1 Sep 75	Cylinder Head Fins; Inspection Criteria	1 Sep 77
MCR No. 5	1 Sep 75	Stationary Reduction Gear Support Sleeves; Rework of	1 Sep 77
MCR No. 6	1 Sep 74	Starter Coupling Thrust Face; Reconditioning of	1 Sep 77
MCR No. 149	22 May 72	Rocker Arm; Reconditioning	15 Aug 72
MCR No. 232	2 Aug 72	Impeller Shaft Segmented Oil Seals; End Clearance for	15 Sep 73
MCR No. 233	2 Aug 72	Impeller Shaft Oil Seal Front and Rear Sleeves and Rings; Limits for	15 Sep 73
MCR No. 235	28 Jul 72	Intermediate Impeller Drive Pinion Journals; Rework of	15 Sep 73

LIST OF APPLICABLE CHANGE DIRECTIVES (CON'T)

ACTIVITY AND TD NUMBER	DATE	TITLE	REISSUE/ REV. DATE
MCR No. 236	28 Jul 72	Starter Coupling Thurst Face; Reconditioning of	15 Sep 73
MCR No. 237	28 Jul 72	Master Connecting Rod Knuckle Pin Holes; Reconditioning	15 Sep 73
MCR No. 238	29 Jul 72	Propeller Shaft Reduction Driving Gear; Installation of	15 Sep 73
MCR No. 242	27 Jul 72	Reduction Gear Pinion; Reconditioning	15 Sep 73
MCR No. 260	5 Oct 72	Rocker Arm Hub Bolt; Time Coding of	15 Sep 73
MCR No. 285	15 Aug 72	Crankcase Main Section Rear Main Bearing Liner; Reconditioning of Splined Type	15 Sep 73
MCR No. 307-1	2 Oct 72	Cylinder Head Exhaust Connection Pad; Reconditioning of	15 Sep 73
MCR No. 319	30 Oct 72	Cylinder Exhaust Port Pad; Use of Spacers	15 Sep 73
MCR No. 331	30 Oct 72	Disposition of Test Equipment	15 Sep 73
MCR No. 337	17 Oct 72	Time-Rite Piston Position Indicator; Use of Scales	15 Sep 73
MCR No. 428	21 Nov 72	Exhaust Pipe Connections; Wear Limits for	15 Sep 73
MCR No. 494	12 Jan 73	Valve Reconditioning; Limits for	15 Sep 73
MCR No. 545	22 Feb 73	High Capacity Oil Pump Strainer; Cleaning and Repair of	15 Feb 73
MCR No. 674	8 May 73	Cam and Oil Sump Pump Drive Support Assembly; Reconditioning of	15 Sep 73
MCR No. 691	1 May 73	Pre-Oil Check Valves; Overhaul of	15 Sep 73
MCR No. 699	10 Jul 73	Oil Sump Scavenge Pump Drive Shaft Gear Bushing; Bore Limits for	15 Sep 73
MCR No. 809	8 Aug 73	Master Rod to Crankpin Bearing Clearance; Measuring of	15 Sep 73
MCR No. 811	8 Aug 73	Cylinder Exhaust Guide Boss; Erosion Limits	15 Sep 73
MCR No. 815	17 Aug 73	Valve Clearance; Revised Limits	15 Sep 73
MCR No. 817	26 Sep 73	Increased Capacity Oil Pump	1 Sep 77

LIST OF APPLICABLE CHANGE DIRECTIVES (CON'T)

ACTIVITY AND TD NUMBER	DATE	TITLE	REISSUE/ REV. DATE
PENSACOLA			
ECN 545-63	12 Jun 63	Crankcase Front Section; Breakedge At Intersection Of Crankcase Attaching Bolt Holes	15 Oct 64
ECN 331-65A	29 Apr 65	Vapor Blasting; use of Alternate Material	1 May 66
ECN 367-65	10 May 65	Stationary Reduction Gear Bolt Torque; Revision	1 May 66
ECN 963-65	1 Nov 64	Intermediate Impeller Drive Pinion Journal-Reconditioning	1 Apr 65
ECN 143-66	7 Mar 66	Alternate to Fluorescent Penetrant Instpection	1 May 66
ECN 192-66A	16 Mar 66	Alternate synthetic Resin Stripping Material	1 May 66
ECN 196-66	22 Mar 66	Propeller Shaft Overhaul Instructions; Clarification of	1 May 66
ECN 204-66		Crankcase Rear End Bore Front Thrust Face; Grinding	1 May 70
ECN 219-66	22 Mar 66	Piston Oil Check Valve Leakage and Operation Test; Alternate Test Fluid	1 May 66
ECN 609-66	28 Jul 66	Accessory Drive and Starter Shaft; Recondition by Chrome Plating	15 Nov 66
ECN 712-66	25 Aug 66	TT-A-580a Anti-Seize Compound-Use of	15 Nov 66
ECN 1093-66	16 Dec 66	Valve Adjusting Limits	1 Jun 67
ECN 1103-66	9 Feb 67	Cam And Oil Sump Drive Support to Crankcase Main Front Section Attaching Screw	1 Jun 67
ECN 83-67	26 Jan 67	Valve Clearance Adjusting Screw Lock Screw Wrench; 7/16 Inch Hex	1 Jun 67
ECN 318-67	24 Mar 67	Accessory Drive and Starter Shaft Spherical Oil Seal and Retainer Lapping	1 Jun 67
ECN 466-67	28 Sept 67	Spacer Heating Tool Heating; Alternate Method	15 May 70
ECN 475-67	1 May 67	Cylinder Deck Reconditioning	1 Jun 67
ECN 476-67	5 May 67	Supercharger Impeller Inspection	1 Jun 67
ECN 703-67	23 Jun 67	Front and Rear Counterweight Holes-Grinding	15 May 70
ECN 748-67	3 Jul 67	Impeller Shaft Bearing Support	15 May 70

LIST OF APPLICABLE CHANGE DIRECTIVES (CON'T)

ACTIVITY AND TD NUMBER	DATE	TITLE	REISSUE/ REV. DATE
ECN 934-67	23 Aug 67	Identification of Undersize Front/Rear Crankshaft Journals After Grinding	15 May 70
ECN 958-67	25 Aug 67	Tool Group Number-Reference	15 May 70
ECN 995-67	13 Sep 67	Impeller Drive, Accessory Drive and Starter Shaft-Installation	15 May 70
ECN 934-68	8 July 68	Crankshaft Front End Extension Journals-Grinding	15 May 70
ECN 418-72	26 Oct 72	Impeller Drive Disc; Cleaning Procedure	15 Sep 73
ECN 243-73	30 Jun 72	Crankcase Front Section to Crankcase Main Front Section Bolt Hole Spot Faces; Reconditioning of	15 Jul 72
FAC 117-72 GP 1		Crankcase Front Section Intake Valve Tappet Guide Bore Oil Feed Holes; Plugging of	15 Aug 72
FAC 117-72 GP-2		Crankcase Front Section Oil Transfer Dowel Holes Area; Repair of	15 Aug 72
FAC 117-72 GP-3		Cylinder Exhaust Valve Guides; Oversize	15 Aug 72
FAC 117-72 GP-4		Ignition Harness Clearance; Provision for	15 Aug 72
FAC 117-72 GP-5		Pre-Oil Check Valve; Pressure Test of	15 Aug 72
FAC 117-72 GP-6		Rocker Box Covers; Reconditioning of	15 Aug 72
FAC 117-72 GP-7		Impeller and Inducer Assembly; Dimensional Limits	15 Aug 72
FAC 117-72 GP-8		Piston Pin; Reconditioning of	15 Aug 72

LIST OF APPLICABLE CHANGE DIRECTIVES (CON'T)

ACTIVITY AND TD NUMBER	DATE	TITLE	REISSUE/ REV. DATE
FAC 117-72 GP-9		Rear Crankshaft Counterweight Bearings; Inspection and Marking of	15 Aug 72
FAC 117-72 GP-10		Accessory Drive and Starter Shaft; Spline Wear Limits	15 Aug 72
FAC 117-72 GP-11		Rocker Arm Assembly; Hub Face Wear	15 Aug 72
FAC 117-72 GP-12		Rocker Arm Assembly; Bushing and Bearing (Plain) Side Clearance	15 Aug 72
FAC 117-72 GP-13		Bearing; Reconditioning of	15 Aug 72
FAC 117-72 GP-13A		Numerical Tool Index Clarification of	15 Aug 72
FAC 117-72 GP-14		Cylinder Barrel Hold-Down Flange; Reconditioning of	15 Aug 72
FAC 117-72 GP-15		Bearing Internal Radial Looseness Revised	15 Aug 72
FAC 117-72 GP-16		Crankcase Front Section Flange; Chrome Plating of	15 Aug 72
FAC 117-72 GP-17		Crankshaft Counterweight Bushings; Inspection of	15 Aug 72
FAC 117-72 GP-18		Master Rod Knuckle Pin Holes; Grinding Limits	15 Aug 72
FAC 117-72 GP-19		Intermediate Cam Drive Gear Bushing and Cam and Oil Sump Scavenge Pump Drive Support; Service Limit	15 Aug 72
FAC 117-72 GP-20		Exhaust Valve Seat Cutters; Deletion of	15 Aug 72
FAC 117-72 GP-21		Reduction Gear Pinion Carrier Trunnions and Trunnion Thrust Faces; Inspection Criteria	15 Aug 72
FAC 117-72 GP-22		Supercharger Rear Cover; Inspection of	15 Aug 72
FAC 117-72 GP-23		Propeller Shaft Thrust Bearing Nut; Inspection and Rework of	15 Aug 72

LIST OF APPLICABLE CHANGE DIRECTIVES (CON'T)

ACTIVITY AND TD NUMBER	DATE	TITLE	REISSUE/ REV. DATE
FAC 117-72 GP-24		Intake and Exhaust Valve Spring Upper Washer Split Locks; Inspection of	15 Aug 72
FAC 117-72 GP-25		Valve Tappet Roller; ID Reconditioning	15 Aug 72
FAC 117-72 GP-26		Supercharger Clutch Oil Control Valve and Pin Assembly; Copper Plating of	15 Aug 72
FAC 117-72 GP-27		Impeller Inducer and Blades; Inspection and Rework of	15 Aug 72
FAC 117-72 GP-28		Stationary Reduction Gear; Inspection and Reconditioning of	15 Aug 72
FAC 117-72 GP-29		Crankcase Front Section; Repair	15 Sep 73
FAC 117-72 GP-30		Exhaust Connection Clamp Assembly; Inspection of	15 Aug 72
FAC 117-72 GP-31-1		Sealing Compound; Change of	15 Aug 72
FAC 117-72 GP-31-2		Removal of Wax or Parraffin; Alternate Method	15 Aug 72
FAC 117-72 GP-31-3		Masking of Rubber Components; Deletion	15 Aug 72
FAC 117-72 GP-31-4		Preservative Hydraulic Oil-Use of	15 Aug 72
FAC 117-72 GP-31-5		Inspection Requirements; Additional	15 Aug 72
FAC 117-72 GP-31-6		Shot Peening; Alternate Size Shot	15 Aug 72
FAC 117-72 GP-31-7		Propeller Hydraulic Leakage Test; Alternate Test Fluid	15 Aug 72
FAC 117-72 GP-31-8		Resin Coated Internal Engine Parts	15 Aug 72
FAC 117-72 GP-31-9		Nital Etch Inspection; Use of Ethyl Alcohol	15 Aug 72

LIST OF APPLICABLE CHANGE DIRECTIVES

ACTIVITY AND TD NUMBER	DATE	TITLE	REISSUE/ REV. DATE
FAC 117-72 GP-31-10		Crankcase Cylinder Deck Copper Plating; Corrosion Protection for	15 Aug 72
FAC 117-72 GP-31-11		Preservation Compounds; Use of	15 Aug 72
FAC 117-72 GP-31-12		Vacu-Blasting; Use of	15 Aug 72
FAC 117-72 GP-31-13		Crankcase Front Main Bearing Retainer Ring; Reconditioning of	15 Aug 72
FAC 117-72 GP-31-14		Oil-In Strainer Inspection	15 Aug 72
FAC 119-72		Propeller Shaft Sleeves; Rework of	15 Aug 72
FAC 120-72		Propeller Shaft Thrust Bearing Spacers; Reconditioning of	15 Aug 72
FAC 121-72		Master Rod Oil Seal Disc; Rework of	15 Aug 72
FAC 39-73		Oil Sump Assembly; Repair of Strainer Sleeve Boss	15 Sep 73
FAC 41-73		Oil Strainer Housing; Repair of	15 Sep 73
FAC 42-73		Supercharger Rear Cover Magneto Pads; Rework of	15 Sep 73
FAC 43-73		Rear Cover Machining and Studding Assembly; Repair of	15 Sep 73
FAC 44-73		Dual Accessory Drive Housing Machining Assembly; Repair of	15 Sep 73
FAC 54-73		Cylinder Exhaust Port Connection or Sleeve; Replacement	15 Aug 72
FAC 62-73		Supercharger Rear Housing Cover Generator Pads; Rework of	15 Sep 73
FAC 63-73		Anti-Seize Compound; Use of	15 Sep 73
FAC 64-73		Crankcase Front Section Oil Transfer Dowel/Oil Seal Ring/ Seating Surface; Repair of	15 Sep 73
FAC 66-73		Supercharger Rear Housing Magnetic Drain Plug Adapter Boss; Rework of	15 Sep 73
FAC 67-73		Supercharger Rear Housing Pilot Diameters; Rework of	15 Sep 73
FAC 68-73		Valve Tappet Guides; Plasma Spray Coating of	15 Sep 73

LIST OF APPLICABLE CHANGE DIRECTIVES (CON'T)

ACTIVITY AND TD NUMBER	DATE	TITLE	REISSUE/ REV. DATE
FAC 69-73		Vapor Blasting; Alternate Material for	15 Sep 73
FAC 98-74		Crankshaft Crankpin Reconditioning	1 Sep 77
LES 15502.12A		Supercharger Front Housing Repair of Wear Grooves	25 Jul 67
LES 15502.55		Impeller Drive Multi-Plate Clutch Plate; Reconditioning	15 Jun 56
LES 15502.56A		Supercharger Roller Clutch Inspection Criteria	11 May 67
LES 15502.60		Cylinder Assembly Exhaust Port Pad; Repair of	7 Apr 69
PN-1		Rocker Arm and Rocker Box-Interference	17 Jun 68
PN-2		Oil Pump Check Valve Body and Oil Pump Check Valve; Clearance	17 Jun 68
PN-3		Supercharger Impeller Inspection and Repair Limits	17 Jun 68
PN-4		Crankshaft Front End Extension; Inspection Procedure	17 Jun 68
PN-5		Generator Drive Gear and Bushing; Clearance	17 Jun 68
PN-7A		Oil Pump Check Valve Body; Rework of	5 Oct 70
PN-11		Engine Post Overhaul and Test Limits	10 Jan 69
PN-12		Crankcase Front Section Main Bearing Ring; Reclamation of	16 Apr 69
PN-12A		Crankcase Main Bearing Retaining Ring; Reconditioning	22 Aug 68
PN-13		Cylinder Barrel Fins Silastic	18 Feb 69
PN-14		Rebarreled Cylinder Heads; Identification of	7 Apr 69
PN-15A		Anti-Friction Bearing; Reconditioning	15 Jul 69
PN-19		Impeller Drive Sprag Clutch Component Matching Designators; Use of	5 Jun 69
PN-21		Accessory Drive and Starter Shaft, and Accessory Drive and Starter Shaft Oil Retainer Plug; Reconditioning	10 Oct 69
PN-24		Table of Limits Changes	5 Feb 70
PN-33		Valve Tappet Guides; Plasma Spray Coating of	26 Feb 71
PN-34		Supercharger Rear Housing Sleeve; Rework of	2 Mar 71

LIST OF APPLICABLE CHANGE DIRECTIVES (CON'T)

ACTIVITY AND TD NUMBER	DATE	TITLE	REISSUE/ REV. DATE
REI 429-63	10 Apr 63	Oil Pump Spring; Installation of	15 Sep 73
REI 1138-63	30 Aug 63	Identification of Engine Components Prior to Assembly	1 May 66

SECTION I

GENERAL INFORMATION

1-1. GENERAL DESCRIPTION. The R1820-76 Series, -80 Series, -86A and -86B engines are nine cylinder, air-cooled, single row static radial, reciprocating power plants. Models R1820-76A and -76B differ from each other only in the type of ignition harness used. The R1820-76C and -76D models are similar to the -76A and -76B, respectively except that they incorporate a heavyweight piston, cylinder and crankshaft assembly configuration. The R1820-80 model differs from the -76B because of the incorporation of improved cylinders, stellite exhaust valve seats, spun on exhaust valve guide locks, and second order balancers. The R1820-80A, -80B models differ from the -80 model because of the incorporation of a heavyweight piston and crankshaft configuration. The R1820-86A, -86B models are similar to the -76A except for the carburetor, ignition harness and the -80A, -80B type heavyweight piston and crankshaft assembly. The R1820-76 Series models use the four stud sleeve type exhaust port connector. The R1820-80, -80A, -80B, -86A and -86B models incorporate cylinders with beaded exhaust port connectors. The R1820-80, -80A and -80B models incorporate a single speed impeller drive and all other models include a two speed drive. Table 1-1 lists specific engine specifications.

TABLE 1-1. ENGINE SPECIFICATION

GENERAL	
Series	R1820-76 Series, -80 Series, -86A and -86B
Type	Air Cooled, Single Row, Radial
Number of Cylinders	9
Bore	6.125 in.
Stroke	6.875 in.
Piston Displacement	1823 cu. in.
Compression Ratio	6.80:1
Impeller Diameter	11.40 in.
Impeller Gear Ratio (R1820-76 Series, -86A and -86B)	7.21 and 10.14:1
(R1820-80 Series)	7.21:1
Rotation of Crankshaft (from rear of engine)	Clockwise
Rotation of Propeller Shaft (from rear of engine)	Clockwise
Propeller Gear Ratio (R1820-76 Series, -86A and -86B)	0.666:1
(R1820-80 Series)	0.5625:1
Propeller Shaft Spline	No. 50
DIMENSIONS	
Overall Diameter (over cowl seal)	54.95 in.
Overall Length	48.50 in.
WEIGHTS	
Total Dry Weight of Engine (pounds) R1820-76A and -76B	1380 Max.
R1820-76C, -76D, -86A and -86B)	1385 Max.
R1820-80	1404 Max.
R1820-80A and -80B)	1409 Max.
Total Weight Packed for Shipment (pounds)	Average (metal container) 2900

TABLE 1-1. - Continued

LUBRICATION SYSTEM

Type	Dry Sump
Oil Specification	MIL-L-6082, Grade 1100 MIL-L-22851, Grade 1120
Main Oil Pressure at 1800 RPM, Oil at 85°C (185°F)	65-75 psi
Oil Pressure at 1450 RPM (Minimum)	50 psi
Oil Pressure at Idle Speed (Minimum)	15 psi
Oil Pressure at Nose	20 psi

VALVES AND TIMING

Intake Opens	40° B. T. C.
Intake Closes	49° A. B. C.
Exhaust Opens	69° B. B. C.
Exhaust Closes	30° A. T. C.
Valve Rocker Clearance	
Set For Timing Check (intake and exhaust)	0.079 in.
Set For Operation	0.010 in.

IGNITION SYSTEM

Type	High Tension
Magneto	Bosch S9LU-3
Ignition Harness	Titeflex
Spark Advance	All Plugs 20° B. T. C.

FUEL SYSTEM

Carburetor	Bendix PD12K18
Fuel Specification	MIL-F-5572
Fuel Grade	100/130
Fuel Pressure Required	21-25 psi

CYLINDER HEAD TEMPERATURE

Ground Operation	260°C (500°F) Max.

CAUTION

Hold all ground operations to an absolute minimum.

TABLE 1-1 - Continued

ACCESSORY DRIVES

Accessory Drive	No. of Drives	Ratio	Max. Cont. Torque Lb. -In.	Max. Stat. Torque Lb. -In.	Rotation
Fuel Pump	1	1.000:1	25	450	Counterclockwise
Vacuum or Hydraulic Pump Type I -76 Series Type X -80 Series, -86A, -86B	1	1.500:1	100	800	Counterclockwise
Vacuum or Hydraulic Pump Type II -76 Series Type XIA -80 Series, -86A. -86B	1	1.500:1	250	1650	Counterclockwise
Generator and Power Take-Off Type IA -76 Series Type XIIA -80 Series, -86A, -86B	1	3.310:1	500	2200	Clockwise
Tachometer Type II -76 Series Type XVA -80 Series, -86A, -86B	2	0.500:1	7	50	Clockwise
Starter Type III -76 Series Type XIVA -80 Series, -86A, -86B	1	1.000:1		25800	Clockwise
Propeller Governor Type XX -76 Series -80 Series, -86A, -86B	1	1.000:1	125	825	Clockwise
Propeller Governor -80 Series	1	0.883:1	125	825	Clockwise

1-2. GENERAL TERMS DEFINED.

a. Front	Propeller End
b. Rear	Anti-Propeller End
c. Right and Left	Viewed facing rear of engine
d. Horizontal	Position as in normal flight
e. Rotation of Crankshaft and Propeller Shaft	Clockwise as viewed facing rear of engine
f. Rotation of Accessory Drives	Clockwise or counterclockwise as viewed facing accessory mounting pad

1-3. The turning speed of a gear or shaft is expressed in terms of the number of revolutions of the gear or shaft in relation to one revolution of the engine crankshaft. The ratio between a gear or shaft and the engine crankshaft is given in decimal form.

1-4. The cylinder numbers and their firing order are shown in figure 1-1. Cylinder capscrews are numbered in a clockwise direction facing the cylinder mounting pad with the front of the engine pointing upward. See figure 1-2. Cylinder mounting pads are numbered the same as cylinders they accommodate.

1-5. Figures 1-3 through 1-5 are three quarter views of a typical engine. An exploded view of a typical engine is shown in figure 1-6. Figures 1-3 through 1-6 have call-outs calling attention to the various parts and major sections of the engine.

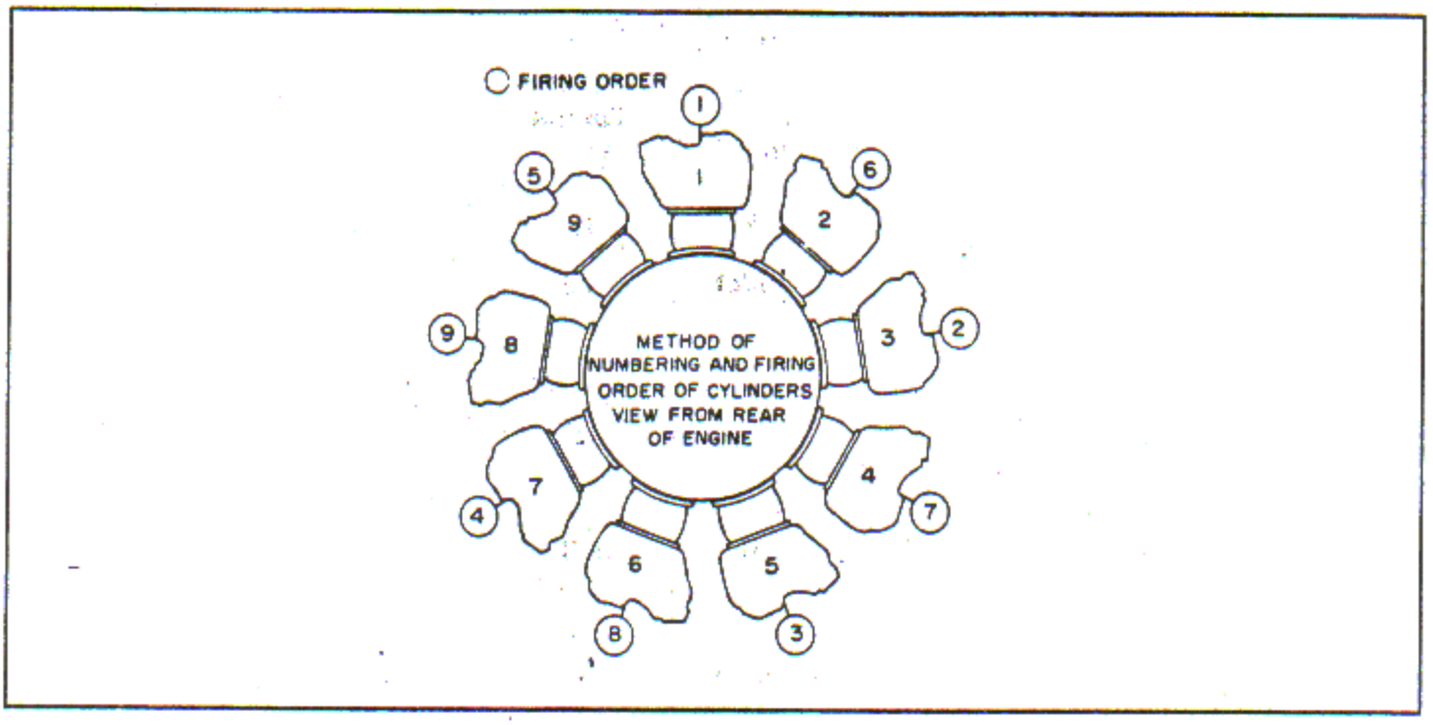

Figure 1-1. Cylinder Numbering and Firing Order

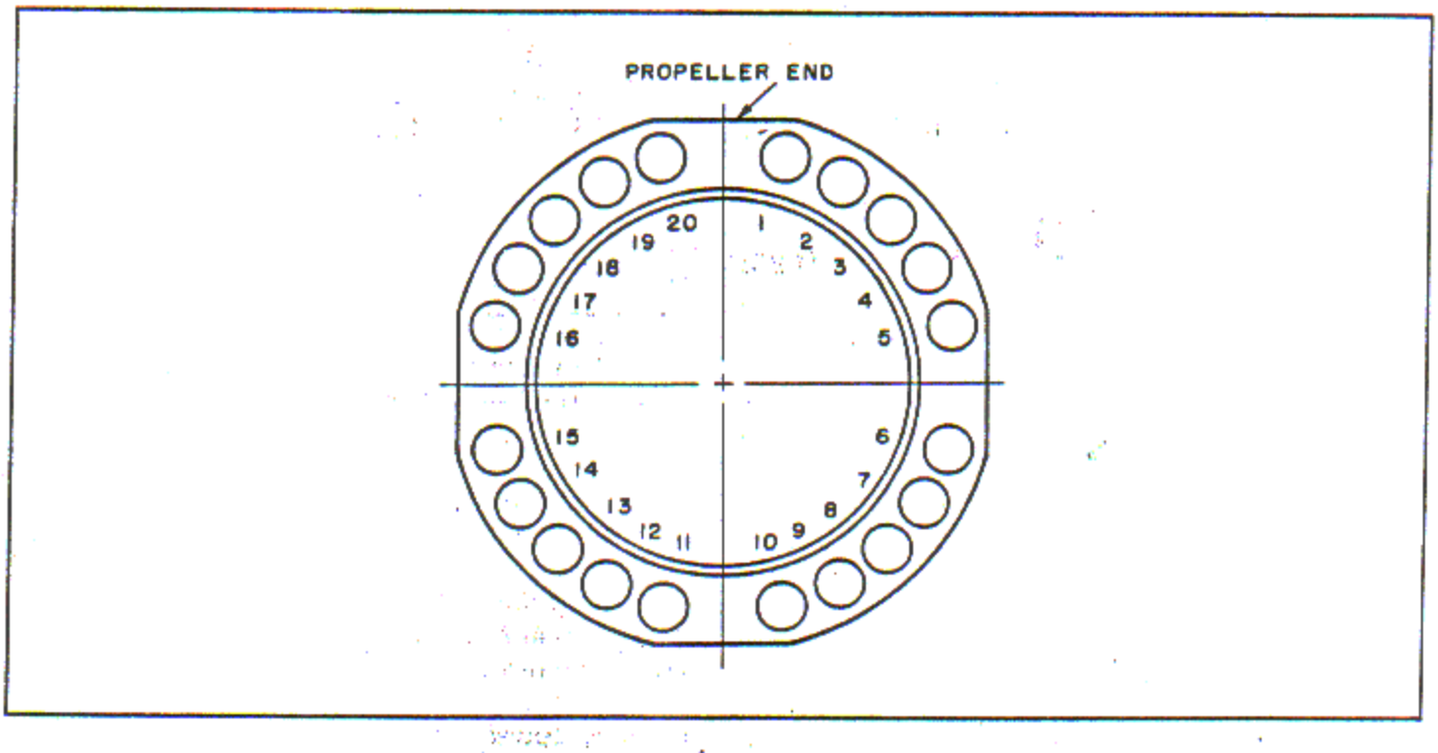

Figure 1-2. Cylinder Capscrew Numbering

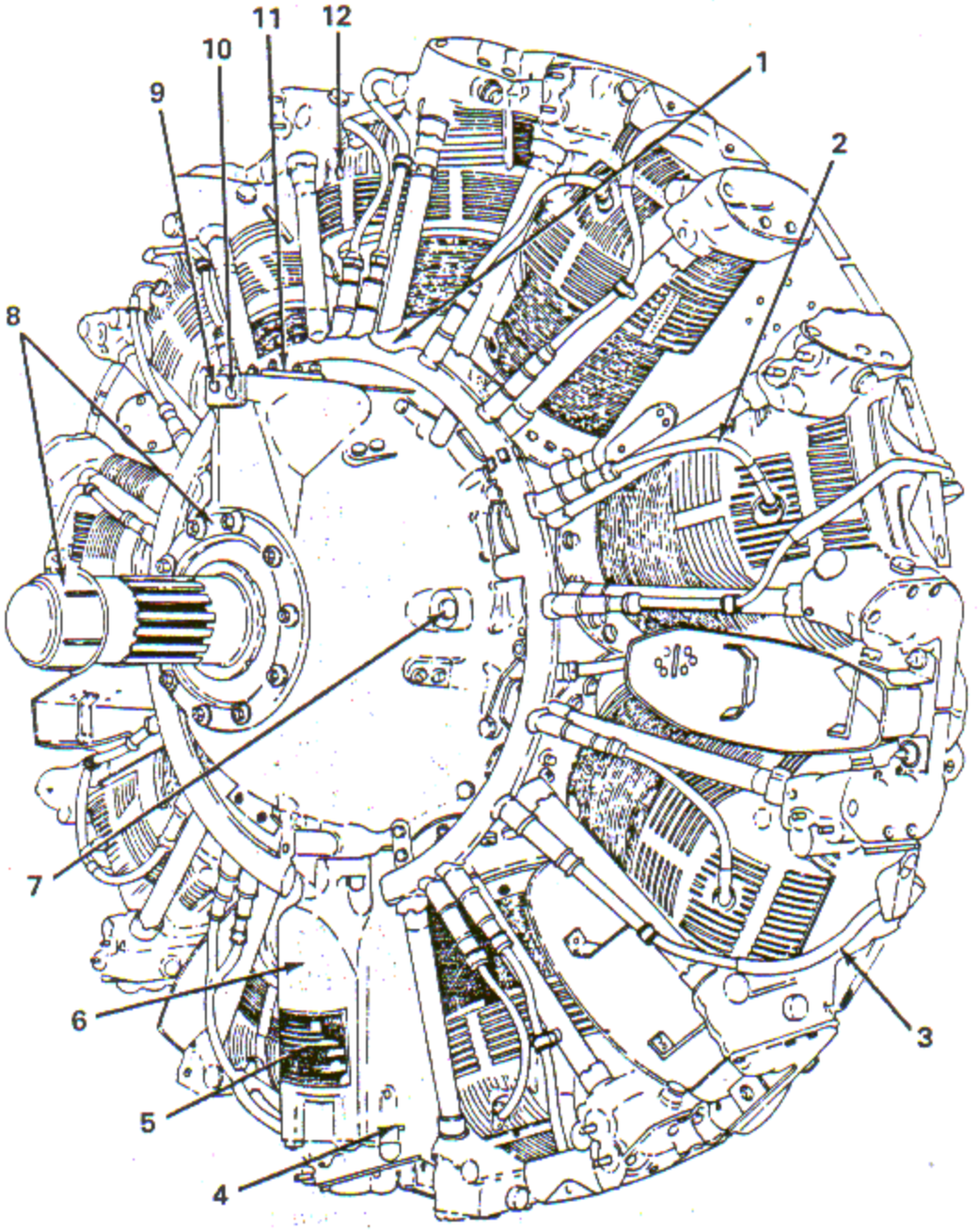

1. IGNITION HARNESS
2. FRONT SPARK PLUG LEAD
3. REAR SPARK PLUG LEAD
4. OIL STRAINER WITH CHIP DETECTOR
5. ENGINE DATA PLATE
6. FRONT OIL SUMP AND PUMP ASSEMBLY
7. TIMING HOLE PLUG
8. PROPELLER SHAFT AND CRANKCASE FRONT SECTION
9. PROPELLER HIGH PRESSURE OIL PLUG
10. PROPELLER LOW PRESSURE OIL PLUG
11. PROPELLER GOVERNOR SUBSTITUTING COVER
12. DETONATION PICK-UP SUBSTITUTING PLUG

Figure 1-3. Three Quarter Left Front View of Typical Engine

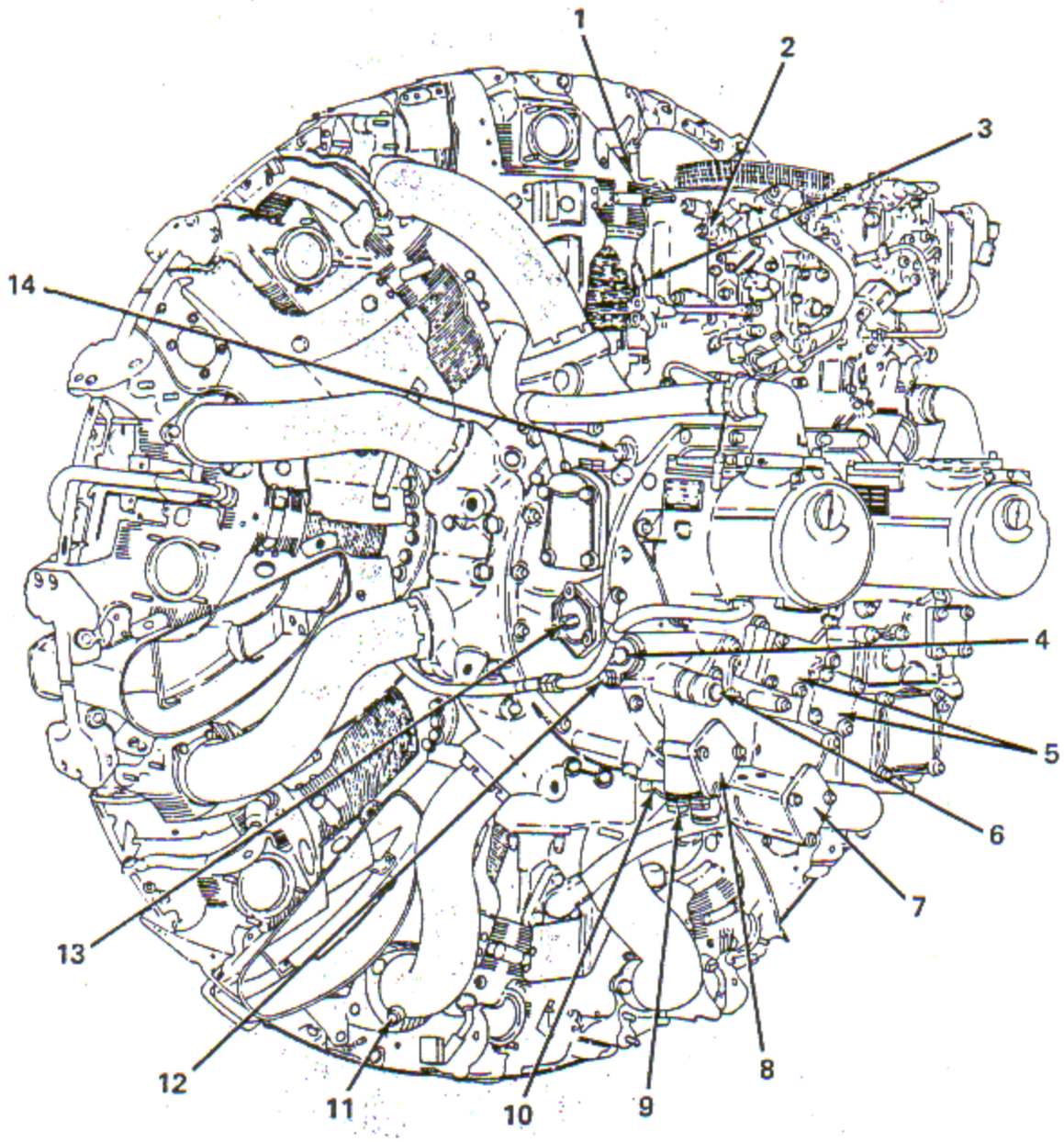

1. CYLINDER HEAD THERMOCOUPLE CONNECTION
2. MIXTURE CONTROL LEVER
3. THROTTLE CONTROL LEVER
4. OIL INLET CHECK VALVE
5. ELECTRICAL TACHOMETER PADS
6. OIL PRESSURE RELIEF VALVE
7. OIL-OUT CONNECTION
8. OIL-IN CONNECTION
9. THERMOMETER CONNECTION FOR OIL-IN
10. OIL SCREEN AND CHIP DETECTOR
11. INTAKE PIPE DRAIN PLUG
12. PRE-OILING CONNECTION PLUG
13. PRESSURE OIL STRAINER
14. OIL RETURN FOR ACCESSORY VACUUM PUMP OIL SEPARATOR AUTO ENGINE POWER CONTROL

Figure 1-4. Three Quarter Left Rear View of Typical Engine

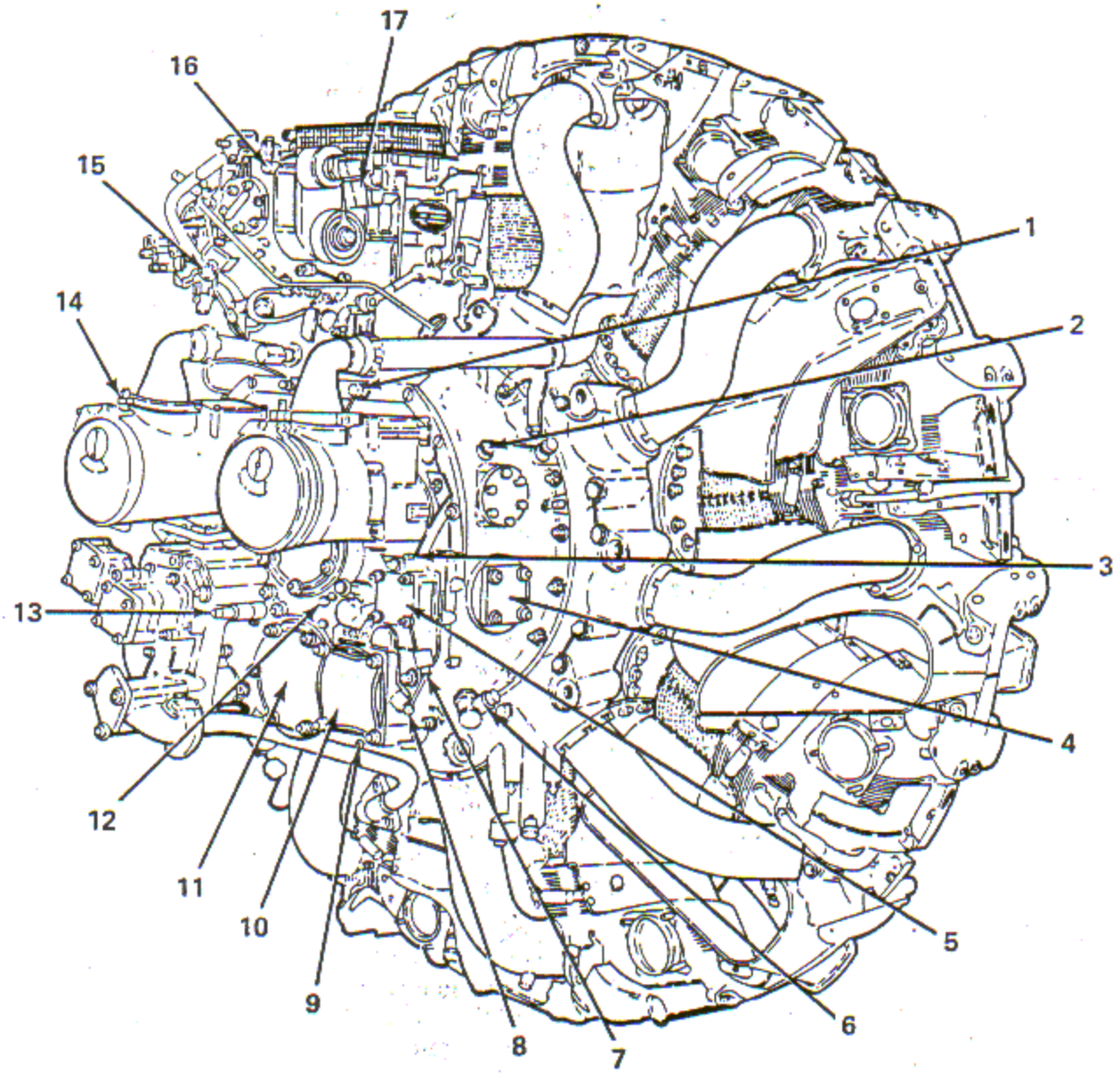

1. MANIFOLD PRESSURE GAGE (FITTING MUST HAVE NO. 50 RESTRICTION)
2. OIL RETURN FOR ACCESSORY VACUUM PUMP OIL SEPARATOR OR AUTO ENGINE POWER CONTROL
3. VACUUM PUMP DRIVE VENT PLUG
4. FUEL PUMP SUBSTITUTING COVER
5. VACUUM PUMP SUBSTITUTING COVER
6. SUPERCHARGER DRAIN PLUG
7. VACUUM PUMP DRIVE OIL DRAIN PLUG
8. HYDRAULIC PUMP DRIVE VENT PLUG
9. HYDRAULIC PUMP DRIVE OIL DRAIN PLUG
10. HYDRAULIC PUMP SUBSTITUTING COVER
11. GENERATOR SUBSTITUTING COVER
12. SUPERCHARGER CLUTCH HIGH RATIO PRESSURE CONNECTION
13. SUPERCHARGER CLUTCH CONTROL VALVE (NA-80, -80B)
14. MAGNETO SWITCH AND BOOSTER COIL CONNECTION
15. ELECTRIC PRIMER SOLENOID
16. VAPOR SEPARATOR RETURN TO TANK CONNECTION
17. FUEL INLET CONNECTION

Figure 1-5. Three Quarter Right Rear View of Typical Engine

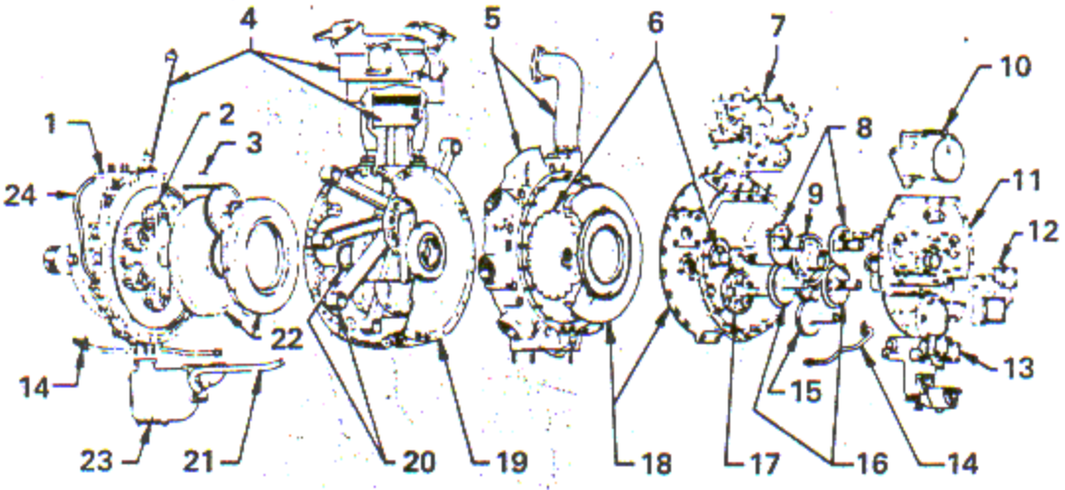

1. CRANKCASE FRONT SECTION
2. PROPELLER SHAFT AND REDUCTION GEARING
3. CONTROLLABLE PITCH GOVERNOR DRIVE
4. CYLINDER, VALVE MECHANISM AND PISTON
5. SUPERCHARGER FRONT HOUSING AND INTAKE PIPE
6. IMPELLER AND IMPELLER SHAFT
7. CARBURETOR
8. MAGNETO DRIVES
9. ACCESSORY DRIVE AND STARTER SHAFT
10. MAGNETO
11. SUPERCHARGER REAR COVER
12. DUAL ACCESSORY DRIVE
13. OIL PUMP
14. EXTERNAL HYDRO-OIL TUBE
15. GENERATOR DRIVE
16. OIL PUMP AND FUEL PUMP DRIVES AND DRIVE FOR DUAL ACCESSORY DRIVE
17. IMPELLER DRIVE
18. SUPERCHARGER REAR HOUSING AND DIFFUSER PLATE
19. CRANKCASE MAIN SECTION
20. CRANKSHAFT AND ARTICULATED RODS
21. EXTERNAL OIL SUCTION TUBE
22. REDUCTION DRIVING GEAR AND CAM MECHANISM
23. OIL SUMP PUMP
24. EXTERNAL HYDRO-OIL SUPPLY TUBE EXTENSION (R1820-86A, -86B MODELS ONLY)

Figure 1-6. Exploded View of Typical Engine

1-6. Studs or capscrews in attaching flanges or pads are numbered in a clockwise direction starting with the first stud or capscrew to the right of the top center of the flange or pad with the engine in a horizontal position.

1-7. Specification numbers used in this publication are basic numbers and will be interpreted to include all revisions and amendments.

1-8. Frequent references are made to the Table of Limits and Table of Tightening Torque Values in Section IX. Use these tables for all operations involving measurement or the use of gages. Reference to the Table of Limits will be by Reference Number and Section Number.

1-9. CRANKCASE FRONT SECTION. The crankcase front section is a magnesium alloy casting machined and studded for attachment of valve tappet guides, propeller governor and front oil sump and pump. It contains passages for governor and tappet oil, a connection for an external line to the tappet oil annulus and a large passage for draining oil to the front sump. The crankcase front section also contains the propeller thrust bearing retainer and governor drive shaft bushing. It incorporates five pairs of screw bushings for attachment of a propeller spinner afterbody, miscellaneous attaching bolt holes and plugs.

1-10. PROPELLER SHAFT AND REDUCTION GEARING (R1820-76 SERIES, -86A AND -86B). The listed engine models are provided with reduction gearing which turns the propeller at a speed of 0.666 ratio to the crankshaft speed. The principal parts of the reduction gear unit comprise a driving gear splined to the crankshaft, pinion gears mounted directly on the propeller shaft, and a stationary gear fastened to the crankcase front section. The pinion gears mesh with the driving gear and with the stationary gear. The propeller shaft incorporates the hydro-oil connection located internally at the front of the shaft.

1-11. PROPELLER SHAFT AND REDUCTION GEARING (R1820-80 SERIES). The listed engine models incorporate reduction gearing which turns the propeller at 0.5625 of crankshaft speed. The reduction is effected through a driving gear splined to the crankshaft, a stationary gear bolted with its support to the crankshaft front section and 20 pinions mounted on a carrier that is bolted to the propeller shaft flange. The pinions, which mesh with the drive gear and the stationary gear, transmit the crankshaft drive to the propeller shaft at the reduced speed.

1-12. CAM MECHANISM. The cam assembly has two integral cam tracks composed of four intake and four exhaust valve actuating lobes which are in contact with the valve tappets. It is driven at 0.125 crankshaft speed through intermediate gearing. The intermediate cam drive gear meshes with the gear on the propeller shaft coupling; it is splined to a pinion which drives the cam. The intermediate gear and pinion rotate in a bushing in the cam support which is screwed to the crankcase main section. The cam revolves around the support and is guided by cam guides screwed to the support. The oil sump scavenge pump driven coupling gear pinion and gear are mounted on the cam support in a manner similar to that for the cam drive gear. In this case, however, the cam drives the pinion gear and the driven gear drives a mating gear attached to the cam support. The shaft of the latter gear is splined to receive the oil pump drive shaft. The R1820-80 Series engines incorporate four balanceweight gears mounted on the cam support that are driven by two intermediate gears which mesh with the teeth on the rear face of the propeller reduction drive gear. This system is designed to counteract objectionable second order vibrations.

1-13. CRANKCASE MAIN SECTION. The crankcase main section is made of two steel forgings bolted together. It is machined for attachment of the nine cylinders and for accommodation of the crankshaft bearing retainers. The main section is doweled and screwed to the crankcase front section at the forward end and the supercharger front housing at the rear end. The parting surfaces are sealed by large rings.

1-14. CRANKSHAFT AND ARTICULATED RODS. The steel crankshaft is made in two sections. The front end is a large shaft splined to accommodate a propeller drive; it includes the front crankcheek and the crankpin. The crankpin contains an oil retaining plug. The rear end is a short shaft splined to accommodate the accessory drive and starter shaft coupling. It includes the rear crankcheek which has a hole to accommodate the crankpin. The rear end is clamped around the crankpin by the crankcheek screw. Counterweights are hung on each crankcheek to dampen vibrations. The crankshaft is drilled to distribute lubricating oil to the power section and front section of the engine. The front crankcheek contains a valve which sprays oil to the cylinder wall. The crankshaft rotates in two roller bearings housed in the crankcase main section.

1-15. The master connecting rod encircles the crankpin over the master connecting rod bearing. The master rod is connected by a pin to the piston in cylinder number one. The articulated rods are connected to the master rod by knuckle pins and to their respective pistons by piston pins. The knuckle pins are locked in place by a locking plate. The master connecting rod bearing is selected for inside and outside diameters and is held fore and aft by a spacer and an oil seal disc.

1-16. CYLINDERS, PISTONS AND VALVE MECHANISMS. The cylinders have forged steel barrels and aluminum heads. Integral cooling fins are machined in the cylinder head and replaceable aluminum fins are attached to the barrel. The cylinder head accommodates an intake valve, exhaust valve, valve rocker arms and two spark plugs. It provides parts and connections for intake and exhaust pipes, connections for push rod housings, a tapped hole for a thermocouple and miscellaneous deflector attaching holes. Cylinders are secured to the crankcase main section with hold-down screws.

1-17. The piston is an aluminum forging machined with five ring grooves. It is connected to the master connecting rod or to the articulated rod by a piston pin. The rings distribute oil in the cylinder barrel and seal the combustion chamber.

1-18. The valve mechanism consists of a tappet, push rod and rocker arm which actuates the spring loaded valve. The tappet rollers ride on the cam and are raised or lowered as they follow the contour of the lobes. The tappets actuate the push rods and in turn, move the rocker arms which

are pivoted in the cylinder head. The rocker arms open the valves which are normally held closed by the dual valve springs.

1-19. CYLINDER AIR DEFLECTORS. The cylinder air deflectors are metal baffles shaped to direct the cooling air through the fins on the cylinder. The engines are equipped with inter-cylinder air deflectors and cylinder barrel air deflectors.

1-20. SUPERCHARGER FRONT HOUSING AND INTAKE PIPES. The supercharger front housing is a magnesium alloy casting. The housing is drilled to accommodate bolts by which it is attached to the crankcase main section and is studded for attachment of the supercharger rear housing and the rear end of the front oil pump and sump. It contains nine engine mounting bolt holes. The supercharger front housing provides for a breather connection and intake pipe connections. An impeller shaft bearing support is mounted in the front of the housing. The intake pipes are attached to the supercharger front housing by coupling nuts and to the cylinders by capscrews. The intake pipes for cylinders number 4, 5 and 6 have connections for draining liquid fuel.

1-21. IMPELLER AND IMPELLER SHAFT. The impeller is designed to increase the mass of the air charge to the engine. It is a balanced assembly composed of an impeller and an inducer splined to a geared shaft. The shaft encircles the accessory drive and starter shaft around which it rotates at considerably greater speeds. It is supported by the accessory drive and starter shaft and is positioned by spacers in the supercharger front and rear housing. The impeller is sealed on both sides by ring-type oil seals.

1-22. SUPERCHARGER REAR HOUSING AND DIFFUSER PLATE. The supercharger rear housing is a magnesium alloy casting. The housing is formed to provide an induction passage. The carburetor is mounted on the housing. The housing accommodates a valve operated by pneumatic pressure differentials for draining liquid fuel from the induction passage when the engine is not in operation or returning fuel to the passage when the engine is running. It contains a manifold pressure tube, an oil vent tube and a chip detector type magnetic oil drain plug. On the left side of the housing there are two pads. The top pad is not used and so is covered; the bottom pad provides for attachment of the oil strainer. On the right side there are two more pads. The top pad is covered and the bottom has attachments for the fuel pump. The housing has holes for attachment to the supercharger front housing, studs for attachment of the supercharger rear cover, and miscellaneous plugs and dowels. The diffuser plate is mounted on studs in the front of the rear housing. It fits over the impeller and has vanes to direct the fuel-air charge from the impeller to the intake pipes.

1-23. ACCESSORY DRIVE AND STARTER SHAFT. The accessory drive and starter shaft front end is coupled to the crankshaft. It is supported on the rear end by a bushing mounted in the supercharger rear cover. It accommodates the twelve-jaw starter (three-jaw for -80 Series engines) coupling in the rear end. The accessory drive gear incorporates lugs which fit in slots on the drive shaft flange. Pins and springs installed between the lugs retain the gear on the shaft. The springs reduce shock on the accessory drive gear trains when the engine is started.

1-24. IMPELLER DRIVE AND CLUTCH CONTROL VALVE (R1820-76 SERIES, -86A AND -86B). The two speed impeller drive consists of an impeller shaft drive gear driven by the accessory drive gear, roller clutch unit, an impeller drive multi-plate clutch (high ratio hydraulic friction clutch unit), a clutch oil control valve and an intermediate impeller drive pinion which drives the intermediate impeller drive gear shaft. This is referred to as the planetary gear system. The impeller can be driven at either 7.21 or 10.14:1. When engaged in low ratio, the high ratio friction clutch is released and the reaction on the intermediate impeller drive gear shaft in the planetary system causes the intermediate impeller drive gear and bushing assembly to rotate faster than the intermediate gear causing the cam in the roller clutch unit to wedge the ten rollers between the flats on the cam and the outer race on the clutch unit. This locks the rotating parts in the assembly into the equivalent of one solid compound gear which drives the impeller. When engaged in high ratio, the high ratio friction clutch holds the intermediate shaft with the integral drive shaft gear stationary. The planetary gear cage with four pinions mounted on it is splined to intermediate

gear, then drives the impeller drive gear which is in mesh with the impeller shaft. The clutch oil control valve is spring loaded to close the pressure oil passage and open the drain passage to the clutch piston chamber in low ratio, releasing the hydraulic clutch.

1-25. IMPELLER DRIVE (R1820-80 SERIES). The single speed impeller drive consists of a gear and a pinion on an integral shaft. The pinion is driven by the accessory drive gear. The larger gear, on the forward end of the shaft, meshes with the impeller shaft gear, turning it 7.21 times crankshaft speed. The rear end of the impeller drive gear shaft rides in a bushing in a support mounted on studs on the forward face of the supercharger rear cover. The forward end of the shaft rides in a bushing in the rear face of the supercharger rear housing.

1-26. MAGNETOS. Each magneto is a nine cylinder, fixed ignition, four-pole, flange-mounted, inductor type unit driven directly through a splined coupling. The magneto drive shaft, turning at 1.125 crankshaft speed, rotates the nine-lobed cam at one-half engine speed through a 2.250:1 gear ratio between the inductor rotor and the distributor gear shaft. The magneto housing is fabricated of high-pressure aluminum alloy.

1-27. Due to a condition which is inherent in all radial engines of conventional master rod design, the travel of each piston, with the exception of the master rod piston, is a few degrees either early or late in relation to the crankpin. The nine-lobe compensating cam used in American Bosch S9LU-3 magnetos, has the lobes spaced to compensate for the irregular angular position of each articulated rod in relation to the master rod. Compensation of the cam thereby ensures each cylinder firing with the piston at the necessary advanced position.

1-28. To prevent accidental starting of the engine should the ground lead be removed from the magneto, the insulation terminal in the breaker compartment carries on its upper surfaces an automatic grounding spring. When the terminal assembly is removed, this acts as a safety device by automatically contacting a pin just under the rim of the breaker compartment, thereby short-circuiting the primary circuit and removing any possibility of unexpected ignition. With the grounding lead installed, the short-circuiting spring is compressed downward against the insulation terminal, and the magneto may only be short-circuited by throwing the ignition switch to the "OFF" position.

1-29. In order to suppress disturbances caused by electro-static waves radiated by the ignition system, the entire magneto including the primary circuit is completely enclosed in metal shieldings. The coil cover contains a special radio shield which suppresses any electro-static waves radiated by the high-tension coil. In addition, the breaker cover and radio shield elbow are secured to the magneto by means of circular clamps. This method of securing permits nearly perfect electrical bonding between the metal parts and permits complete radio shielding of the magneto.

1-30. IGNITION SYSTEM. The high tension, radio shielded ignition system comprises two magnetos mounted on the supercharger rear housing cover, two main conduits which carry the high tension wires to the circular manifold on the front section, and eighteen leads to conduct the current to the individual spark plugs.

1-31. The detachable lead type radio shielded ignition manifold is designed to facilitate replacement of the individual sparkplug leads in the field. The assembly consists of a circular manifold tube that fits on the front section of the engine and carries the ignition cables, coming from the magneto block to the spark plug. At the spark plug outlet of the manifold there is a spring contact making electrical connection with the wire going to the spark plug. This electrical connection is enclosed in a phenolic sleeve which, in turn, is encased in a metal sleeve body. The conduits carrying the wires from the electrical connections to the spark plugs embody the wire conductor and end connectors as a single unit. They are easily attached or disassembled. An antler pipe and flexible conduit assembly enclose the cables from the magneto outlet of the manifold to the magneto block. The cables are secured to a terminal insulation block within a magneto elbow attached to the conduit and are arranged and assembled in the same order as the firing sequence of the engine cylinders. Six mounting lugs are provided on the inside of the circular manifold to fit the crankcase front section to main section attaching screws. A clamp and bracket support arrangement is provided for attaching each conduit to the engine. Ignition manifolds on

the models R1820-76B, -76D, -86A and -86B engines do not provide detachable ignition leads.

1-32. FRONT OIL SUMP AND PUMP. The front oil sump and pump casting collects scavenge oil from the crankcase front section, main section and supercharger front housing. It is attached to studs which are mounted in the crankcase front section and the supercharger front housing. Contained in the front sump casting is a scavenge oil pump driven through a shaft by gearing described in paragraph 1-12. The scavenge pump transfers scavenge oil from the front oil sump through an external drain tube to an adapter at the rear oil pump. This adapter causes front and rear scavenge oil to combine and return to the oil tank via a common return tube. The front sump casting is equipped with a filter screen and a chip detector type magnetic oil drain plug.

1-33. OIL PUMP, DUAL ACCESSORY AND FUEL PUMP DRIVES. The oil pump drive is located in the lower left of the supercharger rear cover. It consists of two gears (a drive gear and a gear for driving the magneto drive) with an internally splined shaft, a spring and spring retainer. The shaft turns in a bearing in the supercharger rear cover. The dual accessory drive is in the lower right of the supercharger rear cover and the fuel pump drive is in the lower right of the supercharger rear housing. The dual accessory drive consists of a drive gear with a shaft screwed to it; the shaft has an internal spline to receive the accessory drive shaft and a helical gear to drive the fuel pump. The splined fuel pump drive shaft mates with the helical gear on the dual accessory drive shaft. The fuel pump shaft is held between the supercharger rear cover, on the inside, and the supercharger rear housing, on the outside, by a support and bearings.

1-34. SUPERCHARGER REAR COVER. The supercharger rear cover, is cast to accommodate many accessory drive bushings. The cover is drilled to supply oil to the rear section and studded or tapped to accommodate the accessories and external connections. On the rear face, the two-stud flange on top is the oil tank vent connection, the center stud circle is the starter mounting pad and the bottom stud circle is the generator mounting pad. The two mounting pads on either side above center are for the magnetos. The studded mounting pad on the left is for the oil pump, and the one on the right is for the dual accessory drives. The two-stud flange on the left of the starter pad is for the external oil connection; and the three-stud mounting pad below it is for the clutch oil control valve. The large radial passage on the left of the front face is for the oil strainer; other passages are oil passages to the accessory drives or to and from the cover. The concave portion below the starter shaft hole is for the supercharger drive clutch. The rear cover fits on studs which are mounted in the supercharger rear housing.

1-35. CARBURETION. The Stromberg PD12K-18 injection carburetor, is a double-barrel down draft unit, incorporating a fuel head enrichment valve, an automatic mixture control unit, idle cut-off and a Stromberg electric primer valve. A throttle actuated accelerating pump, discharge nozzle and a tubular discharge bar are mounted on the adapter unit.

1-36. The discharge from the throttle actuated accelerating pump is carried to the balance chamber in the regulator front body where it momentarily unbalances the regulator, opening the poppet valve further, giving a richer mixture for acceleration. The carburetor also incorporates a throttle balance which reduces the tendency of the throttle valves to creep shut when the vacuum below the throttle valves is high.

1-37. INDUCTION SYSTEM. Air enters through the carburetor where it is mixed with fuel in the proper proportion. The fuel-air mixture passes through the induction passage in the supercharger rear housing into the impeller from which it is directed at high velocity into the diffuser. The mixture then passes through the diffuser and the intake pipes to the intake ports in the cylinder heads. It is admitted to a combustion chamber when the intake valve opens. After combustion takes place the hot gases leave the combustion chambers through the exhaust port.

1-38. LUBRICATION SYSTEM. A full pressure dry sump system of lubrication is used. Cylinder walls, piston pins, front counterweight pins and crankshaft roller bearings are lubricated by splash and spray. Intake tappets and rocker arm bearings in cylinders No. 4, 5, 6 and 7 are gravity fed; all other cylinders are pressure fed.

1-39. A set of gears in the rear oil pump assembly, mounted on the supercharger rear cover, supplies the pressure oil for the entire engine. Part of this oil is delivered to the tappet annulus through an external line from the rear cover. The other set of gears housed in the rear oil pump assembly scavenges the supercharger rear housing and returns this drain oil to the supply tank. The front sump and pump assembly, bolted to the bottom of the crankcase front section and the supercharger front housing, incorporates a cartridge type pump which returns drain oil from the crankcase front section, main section and supercharger front housing through an external tube to the rear oil pump outlet adapter, then to the oil supply tank. Figure 1-7 represents the course of oil through the engine.

1-40. REAR OIL PUMP. Oil from the supply tank is gravity fed through an external line to the rear oil pump inlet, at the bottom left side of the pump housing, and into a passage leading to the pressure chamber. Some of the oil is diverted just before entering the gear chamber, and travels rearward through a drilled passage to the tachometer drive gear box. The main supply of oil enters the pump chamber, leaves it under pressure, and normally flows through the check valve into the strainer cavity located in the supercharger rear housing cover. Under excessive pressure, however, oil is by-passed, through the pressure relief valve, back to the inlet side of the pressure pump.

1-41. PRESSURE RELIEF VALVE. This valve provides a means of adjusting engine oil pressure so that it will remain within specified limits during all normal engine operation. Oil pressure on one side of the valve is balanced against spring tension on the others. Spring tension can be adjusted manually. Drilled holes in the valve neck and flats provide drainage from the space behind the valve to the valve outlet, thus preventing liquid lock and consequent high oil pressure.

1-42. CHECK VALVE. The function of the check valve is to prevent seepage of oil past the pressure gears and loading-up of the engine when it is idle for a period of time. The valve is lightly spring loaded and is not adjustable. Drilled passages which vent the rear of the valve to the engine rear section prevent liquid lock and consequent low oil pressure.

1-43. PRESSURE OIL STRAINER. Inserted through an opening in the supercharger rear housing, the pressure strainer is actually located in a cored chamber in the front face of the supercharger rear cover. A rubber packing ring in a groove near the mouth of this chamber surrounds the strainer housing and seals it against oil leakage into the supercharger rear housing. Oil passing through the check valve enters the strainer cavity and normally passes through holes in the strainer housing and then through the composite elements to the inside of the strainer. If the strainer becomes clogged, or if oil is too cold to flow properly a by-pass valve is provided through a spring loaded ball type valve permitting lubricant to take an otherwise normal course through the engine.

1-44. EXTERNAL HYDRO-OIL TUBE. The external hydro-oil supply tube is connected to the supercharger rear cover at the left side of the starter mounting pad. Oil which flows through this tube comes from an annulus surrounding the accessory drive and starter shaft bushing and proceeds to the tappet annulus. Fabricated in two sections, the tube passes under the left magneto, around the left side of the engine between cylinders No. 7 and 8, and connects at the rear of the crankcase front section. Model R1820 -86B engines are equipped with a flexible external hydro-oil supply tube extension which runs from a connection leading into the tappet annulus in the crankcase front section to a fitting at the front left side of governor mounting pad. This tube supplies additional oil to the propeller governor.

1-45. SCAVENGE SYSTEM. Scavenge oil in the power section drains through holes into either the crankcase front section or the supercharger front housing, depending upon the attitude of the aircraft. The crankcase front section empties directly into the front leg of the front oil sump and pump assembly. The rear left leg of the sump pump assembly receives, through its top opening, oil from the drain passages of the supercharger front housing. The oil in the sump flows to a common chamber with a bottom outlet into a finger strainer. There is a chip detector plug in the bottom of the strainer. The oil passes from the inside to the outside of the strainer and into the front scavenge

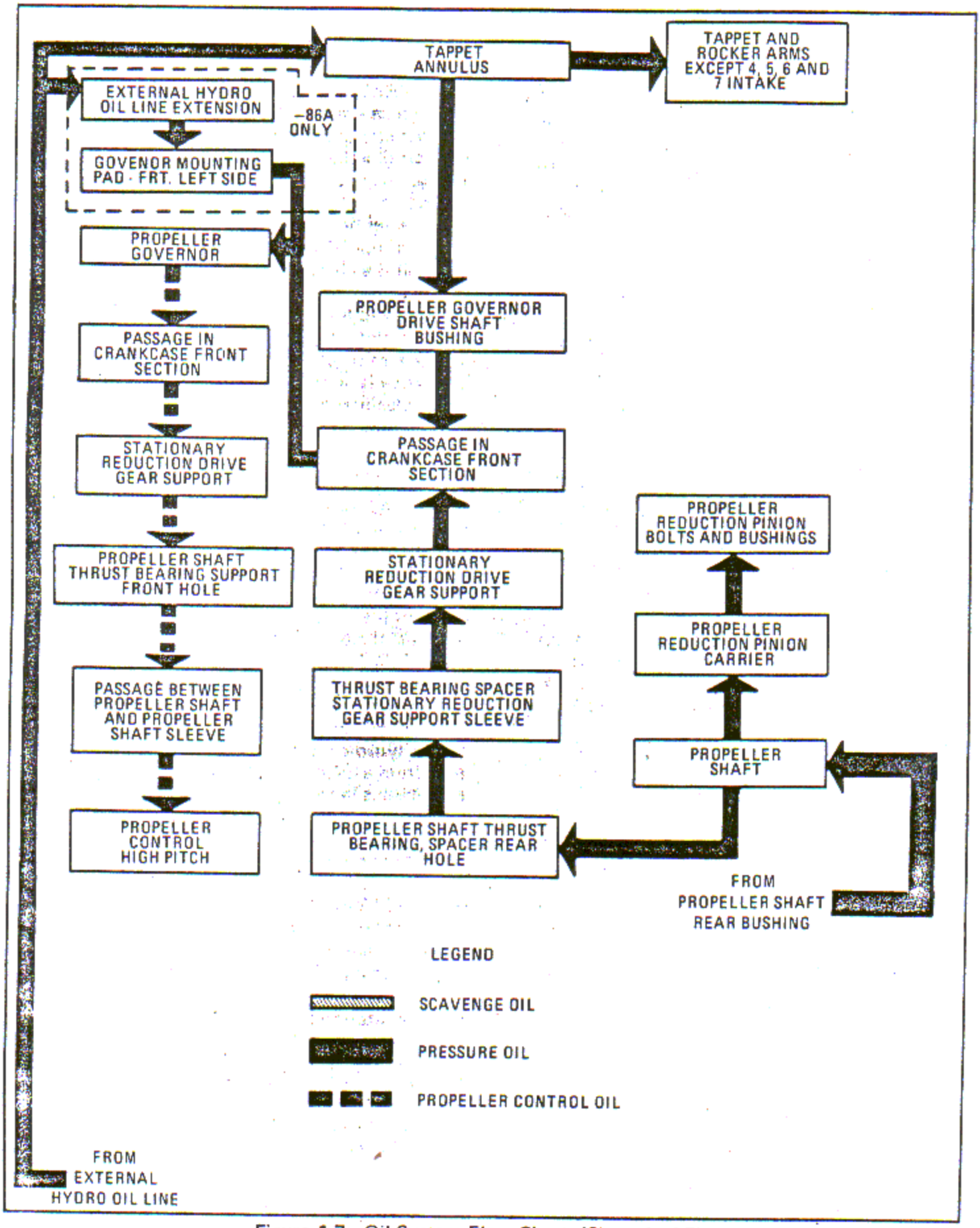

Figure 1-7. Oil System Flow Chart. (Sheet 1 of 5)

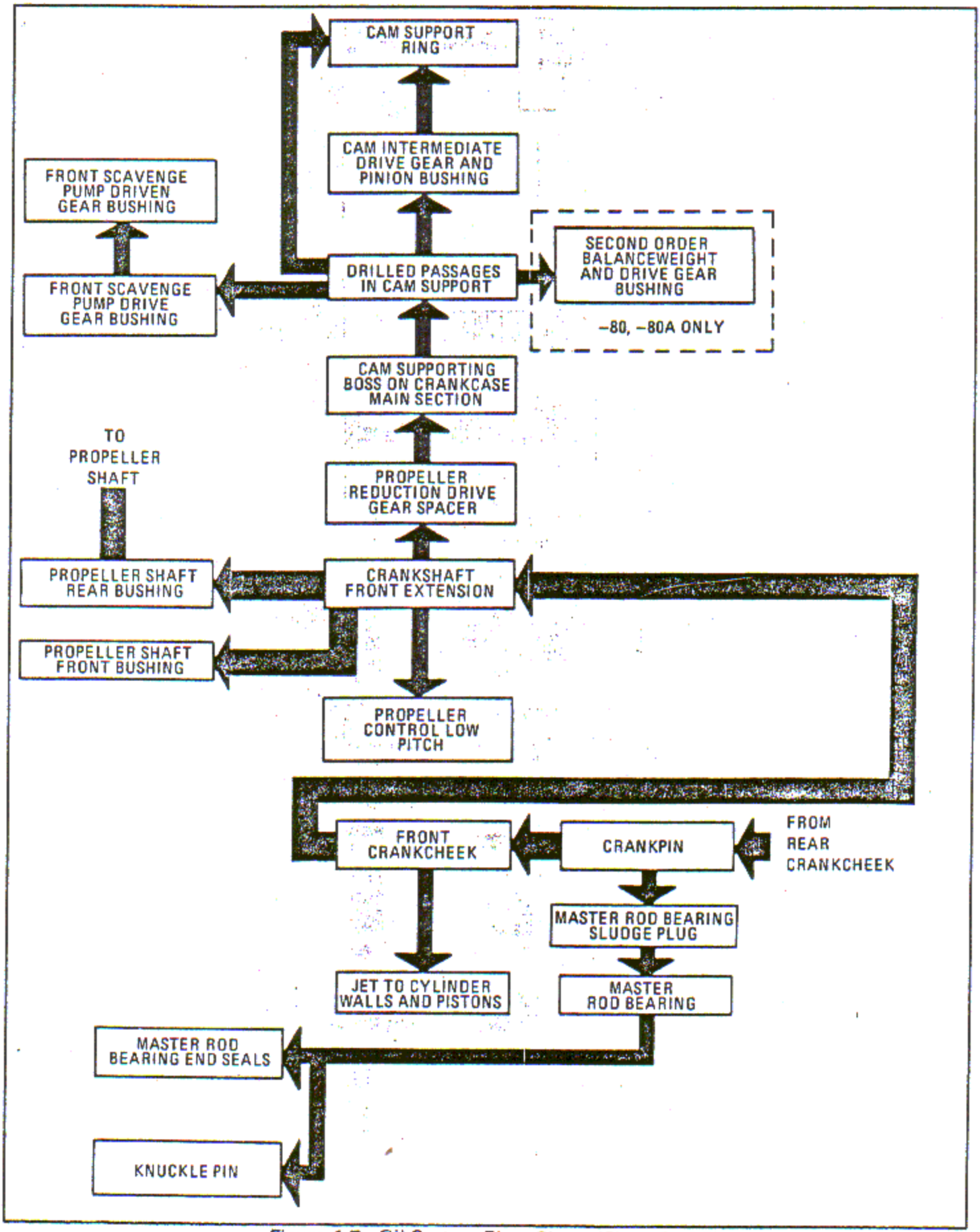

Figure 1-7. Oil System Flow Chart. (Sheet 2 of 5)

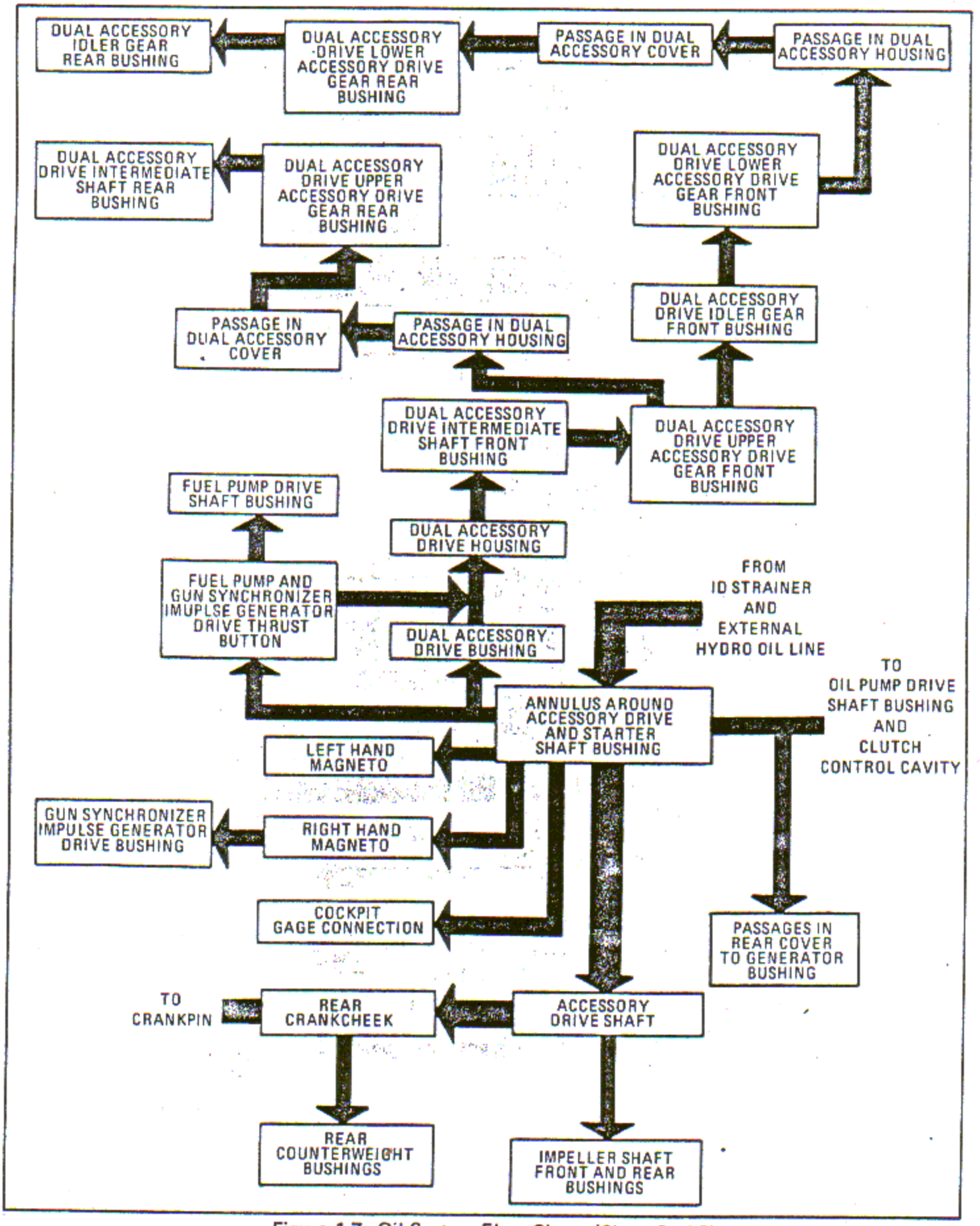

Figure 1-7. Oil System Flow Chart. (Sheet 3 of 5)

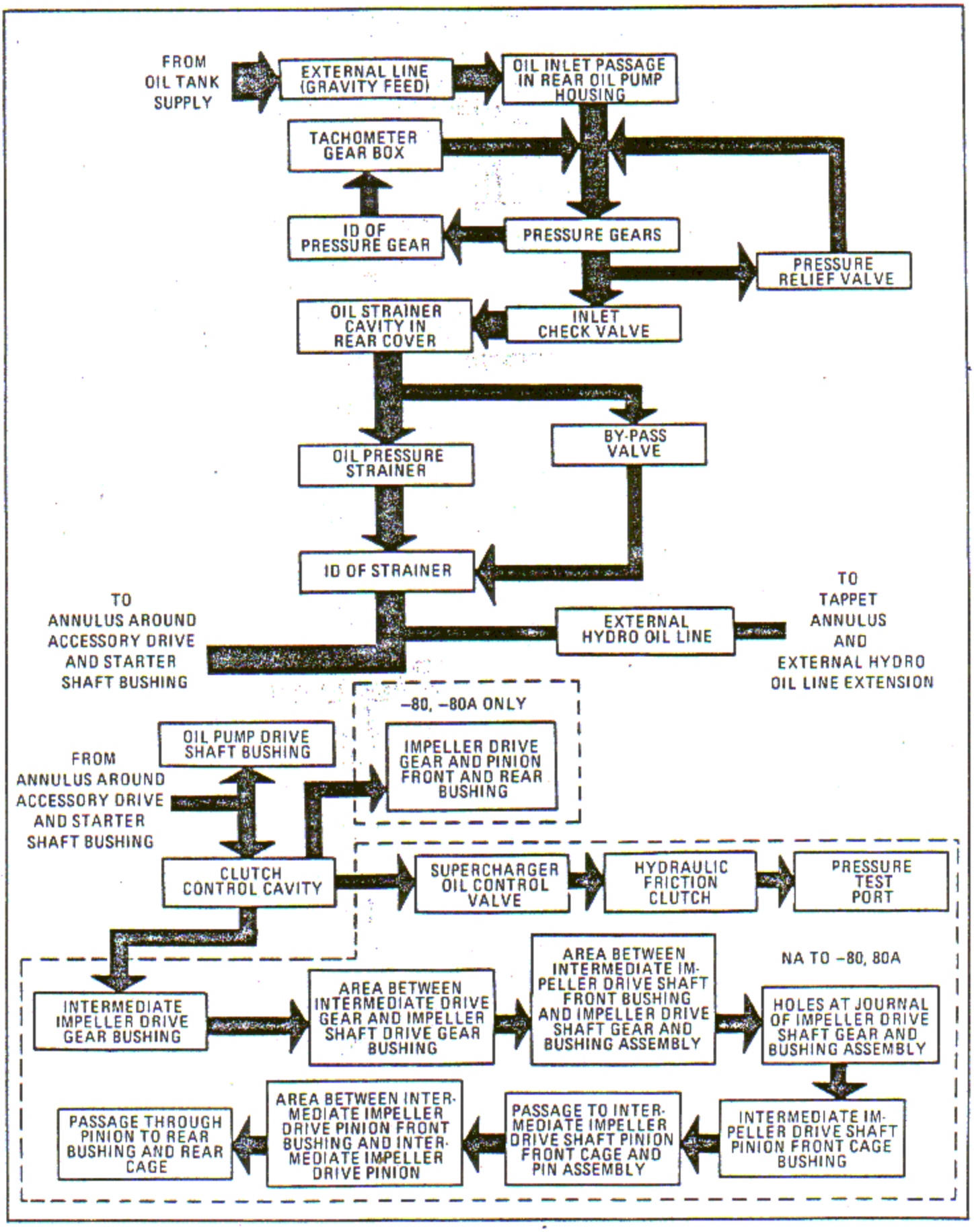

Figure 1-7. Oil System Flow Chart. (Sheet 4 of 5)

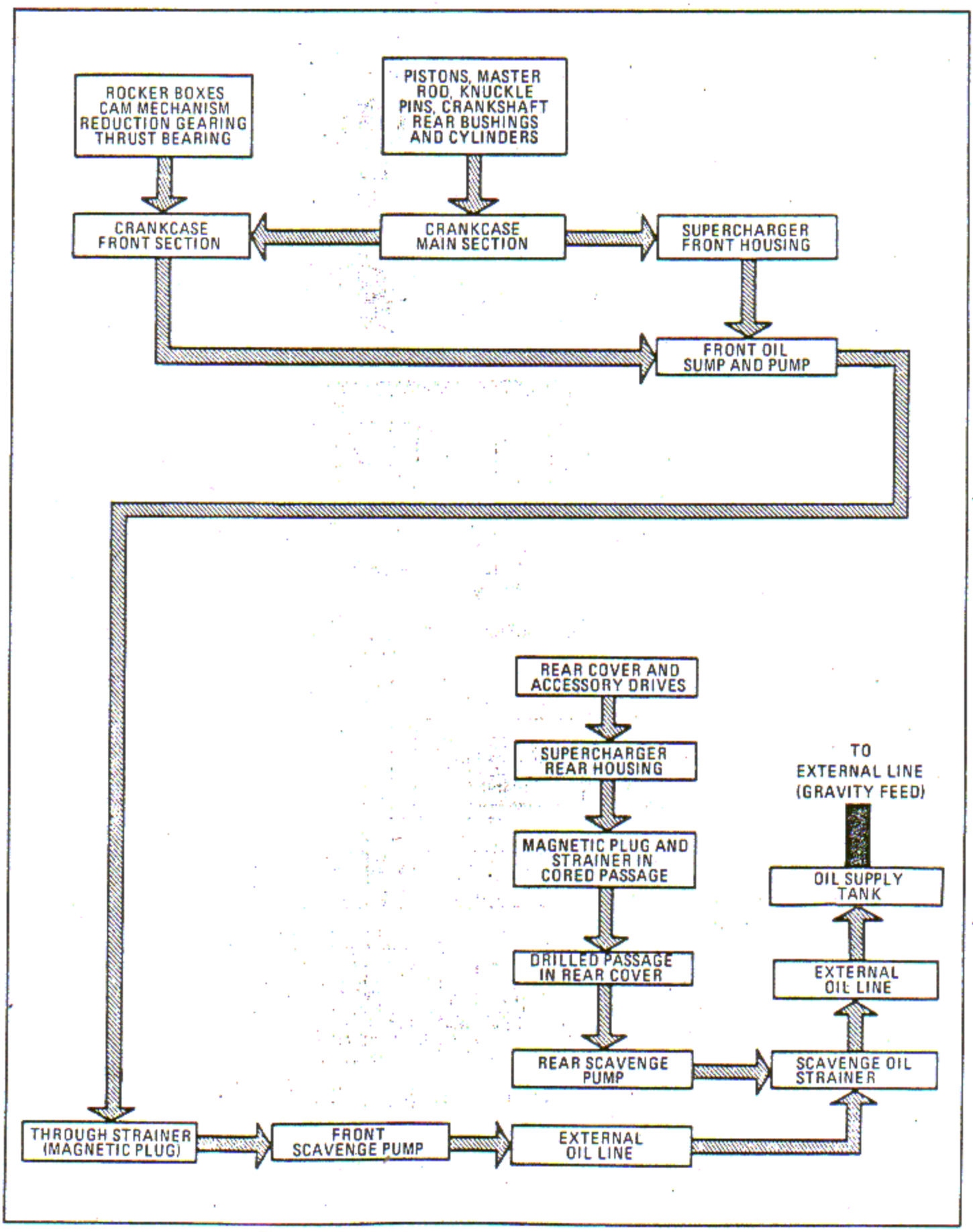

Figure 1-7. Oil System Flow Chart (Sheet 5 of 5)

pump. The pump forces the oil through a cored passage to the rear hole in the laft leg of the sump pump assembly. An external scavenge tube conducts it to the outlet adapter on the "OUT" port of the rear oil pump assembly.

1-46. All of the oil in the supercharger rear housing is scavenged through a cored passage at the bottom of the housing by the scavenge gears in the oil pump assembly on the supercharger rear cover. The oil passes through a screen and chip detector plug assembly that is inserted into the cored scavenge passage at the lower left side of the supercharger rear housing. The rear scavenge gears are above the scavenge oil inlet to the pump housing. For this reason, a passage vents the highest point on the suction side of the pump to the engine rear section to prevent an air lock in the pump when starting the engine. The rear scavenge pump exhausts through the "OUT" port and the outlet adapter. Scavenge oil from the front section leaves the outlet adapter with the drain oil from the rest of the engine to return to the supply tank.

1-47. REAR OIL PUMP DRIVE GEAR SPRING. The shaft of the oil pump drive shaft gear passes through the partition between the scavenge pump and the pressure pump. Necessary clearances leave a passage where gravity oil, when the engine is idle, can seep from the pressure pump inlet into the scavenge pump and then enter the engine rear section. To prevent this seepage, a light spring is compressed between the oil pump drive coupling nut and the oil pump drive gear spring retainer. Spring tension seats the rear face of the oil pump drive gear against the front of the wall between the two pumps.

1-48. ACCESSORIES.

The accessories are supplied by the engine manufacturer although fabricated by other companies. Instructions concerning their removal, installation, and adjustment are contained in appropriate sections of this book. Instructions concerning their overhaul are contained in the respective manufacturer's handbooks of instructions.

SECTION II

AEROSPACE GROUND EQUIPMENT (AGE)

2-1. GENERAL. This section lists the aerospace ground equipment necessary to accomplish the work required in this manual. The tools are listed first in a functional tool list, then in a numerical tool index.

2-2. A basic tool number suffixed by the letter D and followed by a number indicates a replaceable detail of the basic tool.

2-3. Use plastic or rawhide hammer heads (never metal) when driving in any part of the engine. Never lift heavy parts by hand. Use a chain or power hoist and special lifting yokes where applicable. When using pullers or pushers, ensure that the pressure or tension is applied evenly. Tighten puller screws, attaching screws, bolts and nuts uniformly in small increments.

2-4. FUNCTIONAL TOOL LIST. Tools are arranged in the functional tool list in functional groups based upon the engine parts to which the tools are applicable. The functional groups are arranged in alphabetical order and each group is identified by a group number. The tools listed under each group are arranged in the order in which the tools are used. In subsequent sections of this manual, group numbers, not tool numbers, are used to identify tools.

2-5. NUMERICAL TOOL INDEX. The numerical tool index follows the functional tool list. The tools are listed numerically by tool number, together with the applicable group number for each tool.

TABLE 2-1. AGE FUNCTIONAL TOOL LIST

Group No.	Figure No.	Part No.	Nomenclature	Text
1			Accessory Drive and Starter Shaft	7-41
	7-37	806764	Fixture - Cam drive intermediate gear to governor intermediate drive gear assembling and accessory drive gear springs and pins installing	
2			Accessory Drive and Starter Shaft Bushing	6-724 6-725 6-726
	6-225	802980	Tool Bit A - Supercharger rear cover bushing removing and finishing boring bar	
	6-225	802981	Boring Bar - Supercharger rear cover bushing removing and finishing	
	6-225	804319	Adapter - Supercharger rear cover bushings removing and finishing drill press	
		805827	Collet - Magic chuck or equiv.	
		83921	Chuck - Number 3 Morse taper magic or equiv.	
		806348	Tool Bit B - Supercharger rear cover starter bushing hole boss chamfering	
	6-225	806346	Tool Bit C - Supercharger rear cover starter bushing hole boss facing	

TABLE 2-1. AGE FUNCTIONAL TOOL LIST - Continued

Group No.	Figure No.	Part No.	Nomenclature	Text
2 (Cont)	6-225	806347	Holder - Supercharger rear cover starter bushing hole boss boring bar, facing and chamfering tool bit	
	6-225	83875	Plug and Collar - Supercharger rear cover bushing replacement, fixture	
	6-225	82250	Nut - Starter shaft bushing installing, plug, arbor press	
	6-225	82249	Collar - Starter shaft bushing, installing	
3			Accessory Drive and Starter Shaft Coupling	4-35 7-18
	2-5	810365	Puller - Accessory drive and starter shaft coupling	
		810365D5	Jaws - Accessory drive and starter shaft coupling removing, puller	
		807115	Plug and Collar - Accessory drive and starter shaft coupling installing	
4			Accessory Drive and Starter Shaft Oil Seal Packing and Retaining Ring	6-668 6-669
	6-210	802100	Fixture - Accessory drive and starter shaft oil seal packing and retaining ring holding lapping	
		802100D1	Chuck - Accessory drive and starter shaft oil seal packing and retaining ring holding, lapping fixture	
		802100D2	Holder - Accessory drive and starter shaft oil seal packing and retaining ring holding, lapping fixture	
5			Accessory Drive Gear Springs and Pins	4-77 7-41
	4-55, 7-37	806639	Remover and Installer - Accessory drive gear spring and pins	
6			Articulated Rods	7-20
	4-15	806533	Protector - Articulated rod	
7			Balanceweight and Balanceweight Drive Gear	6-305 7-25
	6-71	808060	Fixture - Balanceweight and balanceweight drive gear bores grinding	

TABLE 2-1. AGE FUNCTIONAL TOOL LIST - Continued

Group No.	Figure No.	Part No.	Nomenclature	Text
7 (Cont)	6-71	808061	Gage - Balanceweight and balanceweight drive gear bore plug 1.067 - 1.068 inches diameter	
		808062	Gage - Balanceweight and balanceweight drive gear bores plug 1.072 - 1.073 inches diameter	
		808063	Gage - Balanceweight and balanceweight drive gear bores plug 1.077 - 1.078 inches diameter	
8			Cam and Balanceweight and Sump Pump Drive Gear Support	6-309 6-321 6-322
		805190	Fixture - Cam and oil sump	6-324
	6-72	806315	Fixture - Cam and oil sump pump drive gear support ring, installing	7-24 7-25
	6-79	808064	Fixture - Cam and balanceweight and oil sump pump drive support balanceweight drive gear trunnions grinding	
	6-80	808065	Fixture - Cam and balanceweight and oil sump pump drive support balanceweight trunnions grinding	
		809485	Reamer - Cam and balanceweight and oil sump pump drive support balanceweight and gear retaining bolt holes reaming 0.3488 inch diameter, 0.005 inch oversize	
		809486	Reamer - Cam and balanceweight and oil sump pump drive support balanceweight and gear retaining bolt holes reaming 0.3538 inch diameter, 0.010 inch oversize	
		809487	Reamer - Cam and balanceweight and oil sump pump drive support balanceweight and gear retaining bolt holes reaming 0.3588 inch diameter, 0.015 inch oversize	
9			Cam and Oil Sump Pump Drive Support Bushing	6-314 6-315 6-316 6-319
	6-74	803982	Jig - Cam and oil sump pump drive support bushing finish bore	
	6-74	803981	Plug A - Cam and oil sump pump drive support bushing finish bore jig locating	
	6-74	804228	Boring Bar - Front oil pump drive gear bushing installing drill press	
	6-74	805156	Tool Bit - Bushing removing and finishing boring bar	
	6-75	804966	Gage A - Cam drive gear bushing hole limit plug 1.192 - 1.193 inches diameter	

TABLE 2-1. AGE FUNCTIONAL TOOL LIST - Continued

Group No.	Figure No.	Part No.	Nomenclature	Text
9 (Cont)	6-75	804967	Gage B - Cam drive gear support bushing hole limit plug 1.197 - 1.198 inches diameter	
	6-76	803979	Collar A - Cam and oil sump drive support bushing boring and facing	
		804965	Collar B - Cam drive gear support bushing boring and facing lathe 1.196 inches inside diameter	
		804964	Collar C - Cam drive gear support bushing boring and facing lathe 1.201 inches inside diameter	
	6-77	803985	Plug B - Cam and oil sump drive support bushing installing arbor press	
	6-78	805491	Gage C - Cam drive gear support bushing limit plug 1.016 - 1.017 inches diameter	
	6-78	803429	Gage D - Cam drive gear bracket bushing limit plug 1.015 - 1.016 inches diameter	
10			Cam and Oil Sump Scavenge Pump Drive Support Machining Assembly	4-37 4-38 6-311 6-312 7-26
	4-29	804178	Puller - Crankcase sections removing 5/16-18 thread	
		804599	Bar - Cam and balanceweights and oil sump pump drive support to crankcase main section and bearing ring attaching screw holes aligning	
	6-73	810304	Fixture - Cam and balanceweight and oil sump pump drive support cam bearing, removing	
	6-73	810304D1	Ring - Removing, Cam and balanceweight and oil sump drive support cam bearing, fixture	
	6-73	810304D2	Plate - Removing, Cam and balanceweight and oil sump pump drive support, cam bearing, fixture	
	6-73	806807	Fixture - Cam and balanceweight and oil sump pump drive support bearing, installing	
	6-73	806807D2	Body, Cam and balanceweight and oil sump pump drive support bearing, installing	
	6-73	806807D1	Locator - Cam and balanceweight and oil sump pump drive support bearing installing fixture	
11			Cam Intermediate Drive Gear	4-39 4-40 4-42 8-6
	4-30, 7-20	806764	Fixture - Cam drive intermediate gear to governor intermediate drive gear assembling	

TABLE 2-1. AGE FUNCTIONAL TOOL LIST - Continued

Group No.	Figure No.	Part No.	Nomenclature	Text
11 (Cont)			and accessory drive gear spring and pins, assembling	
	8-3	808295	Aligning Tool - Balanceweight drive gear and intermediate cam drive gear to reduction driving gear	
12			Carburetor Air Inlet Screen	6-624 6-625
	6-198	810252	Block - Screen, carburetor air inlet forming	
	6-198	810252D3	Punch - Carburetor air inlet forming, screen block	
13			Carburetor Attaching Nut	4-6 8-32
		809780	Wrench - Carburetor attaching nut 9/16 inch open end torquing	
		809781	Wrench - Carburetor attaching nut 9/16 inch box end torquing	
14			Counterweight Attaching Bolt Nut	4-34 7-18 7-19
	4-26	803282	Wrench A - Crankshaft front and rear counterweight attaching bolt and nut and pin C clamp lug	
	4-26	803273	Adapter A - Crankshaft front and rear counterweight attaching bolt C clamp lug wrench	
	4-26	803277	Adapter B - Crankshaft front and rear counterweight attaching nut C lug wrench	
	7-13	809078	Wrench B - Crankshaft front and rear counterweight attaching nut lug box 1 inch	
		803084	Punch - Counterweight attaching bolt lock nut cup, staking	
15			Crankcase Front Main Section	4-29 4-34
	4-19	806643	Sling - Crankcase main front section hoist	8-5
	4-20	801789	Protector - Crankcase main section	
16			Crankcase Front Section Flange	4-44 4-45
	4-31	806943	Puller - Crankcase front section flange removing	

TABLE 2-1. AGE FUNCTIONAL TOOL LIST - Continued

Group No.	Figure No.	Part No.	Nomenclature	Text
17			Crankcase Front Section Machining and Studding Assembly	4-25 4-27 4-44
		807048	Cover - Crankcase front section sump pad protecting	4-45 6-240
	4-15	804178	Puller - Crankcase section removing . 5/16-18 thread	7-12
	4-15	923053	Puller and Hoist - Crankcase front section and propeller shaft thrust bearing removing	
	4-15	802837	Stand - Propeller shaft to nose section assembly bench	
	4-31	81402	Handle - General use 7/8 inch diameter	
		923163	Adapter - Crankcase front section and propeller shaft thrust bearing puller and hoist, removing	
		923163	Adapter - Crankcase front section and propeller shaft thrust bearing puller and hoist, removing	
		809391	Reamer - Housing tappet guide bores 0.003 inch oversize, 1.065 inches diameter	
		809392	Reamer - Housing tappet guide bores 0.006 inch oversize, 1.068 inches diameter	
		810447	Reamer - Housing valve tappet guide bores 0.010 inch oversize, 1.073 inches diameter	
		810454	Reamer - Housing valve tappet guide bores 0.020 inch oversize, 1.082 - 1.083 inches diameter	
		808752	Gage - Housings tappet guide bores limit plug 1.065 - 1.066 inches	
		808753	Gage - Housings tappet guide bores limit plug 1.068 - 1.069 inches	
		810446	Gage - Limit plug 1.072 - 1.073 inches diameter	
		810453	Gage - Limit plug 1.082 - 1.083 inches diameter	
		806733	Protector - Crankcase front section parting surface	
	7-9	808294D1	Sleeve - Stationary reduction gear and propeller shaft oil seal spacer and ring installing 4.812 inches inside diameter	
	7-9	808294D2	Sleeve - Stationary reduction gear and propeller shaft oil seal spacer and ring installing 4.817 inches inside diameter	
	7-9	808294D3	Sleeve - Stationary reduction gear and propeller shaft oil seal spacer and ring installing 4.822 inches inside diameter	

TABLE 2-1. AGE FUNCTIONAL TOOL LIST - Continued

Group No.	Figure No.	Part No.	Nomenclature	Text
18			Crankcase Main Section	6-80 6-327
		800130	Gage - Cylinder hold-down capscrew hole thread maximum wear plug 7/16-20/ standard	6-328 6-330 6-331
	6-82	809024	Grinder - Crankcase main section cylinder deck	6-332 7-70
	6-82	809030	Ring - Crankcase main section cylinder deck grinder front section centralizing 7.6598 inches diameter	8-5
	6-82	809013	Ring - Crankcase main section cylinder deck grinder rear section centralizing 6.6967 inches diameter	
	6-82	809034	Gage - Crankcase main section cylinder deck to crankcase center minimum flush pin 8.6060 inches	
	6-83	810372	Jig - Crankcase main section cylinder hold-down capscrew holes drill	
		810378	Gage - Depth crankcase main section cylinder hold-down capscrew holes relief 0.380 - 0.410 inch depth	
		810379	Gage - Depth crankcase main section cylinder hold-down capscrew holes relief 0.295 - 0.315 inch depth	
		802901	Wrench - Crankcase front section and supercharger front housing to crankcase main screw or nut 5/8 inch hexagon	
		84922	Wrench - Torque 1200 inch-pounds	
		808863	Wrench - Open end, generator and starter attaching nut, 9/16 inch	
		808864	Wrench - Generator and starter attaching nut, 9/16 inch box end	
19			Crankcase Main Section Attaching Bolt	4-29 8-5
	4-18	84356	Wrench - Crankcase front main section to rear main section bolt and nut box 5/8 inch hexagon	
	4-18	809887	Wrench - Crankcase front main section to rear main section bolt nut box 11/16 inch hexagon	
		809395	Wrench - Crankcase front main section to rear main section bolt nut box 5/8 inch hexagon	

TABLE 2-1. AGE FUNCTIONAL TOOL LIST - Continued

Group No.	Figure No.	Part No.	Nomenclature	Text
19 (Cont)		809886	Wrench - Crankcase front main section to rear main section bolt nut box 11/16 inch hexagon torque	
20			Crankcase Main Section Hollow Dowel	7-26
	7-24	803358	Installing Tool - Crankcase dowel	
21			Crankcase Rear Main Bearing	6-334 6-335 6-336 6-337
		810324	Puller - Removing, crankcase main bearing front ring	
	6-86	806891	Fixture - Crankcase rear main bearing ring, grinding	
	6-87	810275	Arbor - Grinding, crankcase main section rear bearing liner (6.6890 diameter)	
	6-88	810503	Fixture - Installing, crankcase main section rear bearing liner	
		806894	Gage - Crankcase rear main bearing ring flat plug 6.6969 - 6.6979 inches diameter	
		810504	Gage - Flush pin, crankcase main section rear bearing liner (bearing retaining flange face) depth checking 4.698 - 4.703	
22			Crankcheek Screw	4-33 7-21
	4-24, 7-19	80309	Wrench - Box crankshaft crankcheek capscrew 1-9/16 inch hexagon	
	4-24, 7-19	80198	Extension - Crankshaft crankcheek capscrew box wrench	
	7-17	82200	Measuring Tool - Crankshaft crankcheek capscrew stretch	
23			Crankshaft Assembly	4-30 7-21
	4-22, 8-1	803572	Eye (B) - Crankshaft hoist	8-4
	4-22, 8-1	802955	Eye (A) - Crankshaft and connecting rods assembly hoist	8-8
	4-23	806747	Stand - Crankshaft disassembling, assembling and aligning floor	
		923054	Turning Tool - Crankshaft	

TABLE 2-1. AGE FUNCTIONAL TOOL LIST - Continued

Group No.	Figure No.	Part No.	Nomenclature	Text
24			Crankshaft Breather Substituting Plug	4-34
	4-26	923050	Puller - Crankshaft breather hole plug removing	
25			Crankshaft Crankpin	4-34
	4-25	810514	Puller - Crankshaft crankpin oil sludge retaining plug	
26			Crankshaft Front End	6-343 6-344
	6-91	810180	Fixture - Grinding crankshaft crankpin and thrust face	6-346 8-8
		810473	Lap Hand - Crankshaft crankpin 3.2395 - 3.2485 inches	
		809109	Gage - Crankshaft crankpin flatness checking	
	6-93	810217	Spacer - Clamping crankshaft crankpin front thrust face grinding fixture 1.9975 inches diameter	
	6-93	810215	Adapter - Centering crankshaft crankpin	
		803572	Eye - Crankshaft hoist	
27			Crankshaft Front Main Bearing Inner Race	4-30
	4-21	803743	Hose - Multi-purpose hydraulic jack and pump or equiv.	
	4-21	803746	Pump - Multi-purpose hydraulic jack hand	
	4-21	806356	Ring - Multi-purpose hydraulic puller adapter	
	4-21	809113	Bolt - Crankshaft main bearing inner race removing front puller	
	4-21	806794	Jack - Multi-purpose hydraulic 10 ton or equiv.	
	4-21	807112	Plug - Multi-purpose puller, 10 ton hydraulic jack	
	4-21	807113	Adapter - Crankshaft front main bearing inner race, removing puller	
	4-21	923208	Plate - Multi-purpose puller, 10 ton hydraulic jack	

TABLE 2-1. AGE FUNCTIONAL TOOL LIST - Continued

Group No.	Figure No.	Part No.	Nomenclature	Text
28			Crankshaft Front and Rear End	6-381 6-801
	6-267	810527	Insulator - Crankshaft front end extension journal (at propeller shaft front bushing) 2 inches inside diameter or equiv.	6-803
	6-267	810528	Insulator - Crankshaft front end extension journal (at propeller shaft rear bushing) 2-5/8 inches inside diameter or equiv.	
	6-268	810529	Insulator - Crankshaft front end, bronze plating or equiv.	
	6-268	809969	Plug - Insulator, crankshaft rear	
	6-268	809970	Fixture - Insulator, crankshaft rear	
29			Crankshaft Rear End	4-33 6-372
	4-24, 7-15	805144	Plug - Crankshaft rear end removing and installing	7-21
	4-24, 7-15	801864	Stop - Crankshaft front and rear end removing and installing tool	
	4-24, 7-15	805145	Screw - Crankshaft rear end removing and installing	
		923389	Gage - Assembly feeler	
	6-105	810367	Bolt - Adjusting rear crankshaft crankpin clamping bore 1-1/4-12 thread crankcheek screw	
	6-105	810180	Fixture - Grinding crankshaft crankpin and thrust face	
	6-105	810369	Spacer - Clamping crankshaft rear end crankcheek front face grinding fixture	
	6-108	809937	Jig - Drill crankshaft rear end and accessory drive and starter shaft coupling 2.002 inches outside diameter lock pin	
30			Crankshaft Rear Main Bearing Inner Race	4-35
	4-27	803743	Hose - Multi-purpose hydraulic jack and pump or equiv.	
	4-27	803746	Pump - Multi-purpose hydraulic jack hand	
	4-27	806356	Ring - Multi-purpose hydraulic puller adapter	
	4-27	806376	Bolt - Multi-purpose hydraulic puller	
	4-27	806794	Jack - Multi-purpose hydraulic 10 ton or equiv.	
	4-27	808691D1	Adapter - Crankshaft rear main bearing inner race removing puller replacement	
	4-27	808691D2	Plug - Crankshaft rear main bearing inner race removing puller adapter	

TABLE 2-1. AGE FUNCTIONAL TOOL LIST - Continued

Group No.	Figure No.	Part No.	Nomenclature	Text
30 (Cont)	4-27	923208	Plate - Multi-purpose puller, 10 ton hydraulic jack	
31			Crankshaft Rear Main Bearing Nut	4-33 7-22
	4-23	809724	Wrench - Lug crankshaft rear main bearing retainer nut	
		84922	Wrench - Torque 1200 inch-pounds	
		808863	Wrench - Open end, generator and starter attaching nut, 9/16 inch	
		808864	Wrench - Generator and starter attaching nut, 9/16 inch box end	
31A			Cylinder and Piston Removal and Disassembly	4-26 4-50
	4-13	806791	Puller - Cylinder hold-down capscrew lockwire removing	
		808171	Puller - Cylinder hold-down capscrew lock plate removing	
		810266	Wrench and extension manual impact cylinder hold-down capscrew torque breaking	
	4-13 8-9	807586	Wrench A - Cylinder hold-down capscrew box 1/2 inch hex.	
		83130	Wrench C - Cylinder hold-down nut and capscrew speed 1/2 inch hex.	
	4-14	923393	Wrench B - Cylinder hold-down capscrew pneumatic reversible 1/2 inch hex.	
	8-7	923055	Turning Tool - Propeller shaft	
	2-4	810511	Puller - Piston pin removing	
	6-15	806915	Plate - Master rod guide	
		923112	Stand - Cylinder reconditioning floor	
		808257	Loosening Tool - Valve spring upper washer lock (split) impact 2-9/32 inch ID	
	2-6	810298	Compressor - Valve spring	
	4-7	806699	Holder - Exhaust and Intake valve	
	4-36	806702	Holder - Exhaust valve 3/4 inch diameter	
		807779	Puller - Exhaust valve spacer retainers removing	
		808193	Remover and Installer - Exhaust valve guide oil seal ring	
	4-36	807779	Wrench - Cylinder head thermocouple adapter lug	
	8-8	803145	Clamp - Piston ring	
		802177	Screws - Cylinder to crankcase locating 1/2 inch hex.	
	8-10	808124	Installing Tool - Cylinder hold-down capscrew lock plate impact front and rear inside	

TABLE 2-1. AGE FUNCTIONAL TOOL LIST - Continued

Group No.	Figure No.	Part No.	Nomenclature	Text
32			Cylinder Exhaust Pipe Connector or Sleeve	6-115 6-538 6-539 6-540 6-543 6-554
	6-171	802622	Nozzle - Cylinder head heating air and gas hose attachment or equiv.	
	6-171	809931	Holder - Exhaust and intake valve guide and seat retaining during cylinder heating	
	6-171	809932	Holder - Cylinder rocker arm shaft bushings retaining during cylinder heating	
	6-171	800207	Stand - Intake (steel) and exhaust valve seat removing bench	
	6-172	810404	Puller - Exhaust pipe connection removing	
	6-172	810415	Puller - Exhaust port sleeve removing	
		805786	Fixture - Cylinder reconditioning drill press fixture	
	6-176	808082	Installer - Front and rear exhaust pipe	
	6-176	810405	Installer - Exhaust port sleeve	
	6-12	810702	Gage - Exhaust pipe connection	
		810667	Drill Jig - Exhaust port pad	
33			Cylinder Head and Cylinder Barrel	6-104 6-416 6-418 6-422 6-424 6-426 6-427 8-25
		800641	Gage - Cylinder bore	
		84757	Gage - Cylinder bore gage setting master ring	
	6-122, 6-129	809763	Gage - Cylinder barrel flange to cylinder head dome flush pin	
	2-9	806598	Fixture - Cylinder bore honing	
		802097	Driver - Choked and straight cylinder bore hone	
		806845	Hone Assembly - Cylinder bore honing holder	

TABLE 2-1. AGE FUNCTIONAL TOOL LIST - Continued

Group No.	Figure No.	Part No.	Nomenclature	Text
33		809562	Lap - Power cylinder barrel	
(Cont)	6-125	803094	Holder - Cylinder head heating	
	6-125	802622	Nozzle - Cylinder head heating air and gas hose attachment or equiv.	
	6-125	808999	Fixture - Cylinder barrel water cooling and holding	
	6-126	810408	Gage - Timing cylinder head buttress thread	
	6-128	810411	Protectors - Cylinder rocker box cover studs	
	6-128	810409	Gage - Aligning Cylinder head and barrel buttress thread	
	6-128	810410	Fixture - Holding cylinder head	
		803867	Installation Tool - Cylinder head fin damper	
		806259	Peening Tool - Cylinder head fin brace (thin face)	
		810642	Tap - Cleaning, spark plug insert, spark plug hole 18mm - 1.5mm pitch	
34			Cylinder Hold-Down Capscrew	4-26 8-12
		810266	Wrench and Extension Manual Impact - Cylinder hold-down capscrew torque breaking	
	4-13, 8-9	807586	Wrench A - Cylinder hold-down capscrew box 1/2 inch hexagon	
		807586D2	Wrench, Cylinder hold-down capscrew box 1/2 inch hexagon	
		807586D3	Rollpin - Cylinder hold-down capscrew box 1/2 inch hexagon wrench	
		83130	Wrench C - Cylinder hold-down nut and capscrew speed 1/2 inch hexagon	
	4-14	923393.	Wrench B - Cylinder hold-down capscrew pneumatic reversible 1/2 inch hexagon	
		923394	Shaft - Cylinder hold-down capscrew pneumatic reversible speed wrench 1/2 inch hexagon replacement	
		923396	Gear - Cylinder hold-down capscrew pneumatic reversible speed wrench 1/2 inch hexagon replacement, idler	
		923397	Body - Cylinder hold-down capscrew pneumatic reversible speed wrench 1/2 inch hexagon replacement	
		923398	Socket - Cylinder hold-down capscrew pneumatic reversible speed wrench 1/2 inch hexagon replacement	

TABLE 2-1. AGE FUNCTIONAL TOOL LIST - Continued

Group No.	Figure No.	Part No.	Nomenclature	Text
34 (Cont)		923399	Cover - Cylinder hold-down capscrew pneumatic reversible speed wrench 1/2 inch hexagon replacement	
		802177	Screw - Cylinder to crankcase locating 1/2 inch hexagon	
	8-9	84922	Wrench - Torque 1200 inch-pounds	
		808863	Wrench - Open end, generator and starter attaching nut, 9/16 inch	
		808864	Wrench - Generator and starter attaching nut, 9/16 inch box end	
35			Cylinder Hold-Down Capscrew Locking Plate	4-26 8-12
	4-13	806791	Puller - Cylinder hold-down capscrew lockwire removing	
		808171	Puller - Cylinder hold-down capscrew lock plate removing	
	8-10	808124	Installing Tool - Cylinder hold-down capscrew lock plate impact front and rear inside	
36			Cylinder Machining and Studding Assembly	4-13 6-420
		804351	Cover - Cylinder intake port	6-445
		803837	Cover - Cylinder exhaust port (R1820-76 Series engines)	6-446 6-447
		808400D6	Cover - Front and rear cylinder exhaust port connection (R1820-80 Series, -86A, -86B engines)	6-448 6-449 6-451
		809722	Pallet - Holding cylinder automatic washer	6-456
	6-134	809316	Fixture - Barrel fins cylinder holding	6-458
		805774	Caulking Tool - Cylinder fin	6-535
	6-134	807722	Removing Tool - Cylinder barrel fin	6-536
		808599	Chisel - Cylinder barrel fin and caulking wire removing	7-27
		805773	Crimping Tool - Barrel fin	
	2-10	808948	Crimping Tool - Cylinder barrel fin straight multiple	
	6-135	808633	Caulking Tool - Cylinder barrel deflector attaching fin	
	6-135	808635	Gage - Cylinder barrel deflector attaching fin position	
	6-137	806645	Jig - Cylinder head fins drill	
		808826	Fixture - Cylinder horizontal holding	

TABLE 2-1. AGE FUNCTIONAL TOOL LIST - Continued

Group No.	Figure No.	Part No.	Nomenclature	Text
36 (Cont)	6-139	809653	Jig B - Drill cylinder head vertical fins baffle attaching bolt spacer solid boss exhaust port location	
		809654	Jig C - Drill cylinder head vertical fins baffle attaching bolt spacer solid boss exhaust connection location	
	6-140	809666	Expander - Cylinder head vertical fins baffle attaching bolt spacer	
	6-140	809667	Spacer - Cylinder head vertical fins baffle attaching bolt spacer expander	
	6-155	808575	Fixture - Cylinder exhaust valve seat pressure test	
	6-169	809793	Fixture - Welding and tapping Number 4 and Number 6 intake pipe drain boss	
		802112	Plug - Cylinder spark plug hole	
36A			Cylinder and Valve Assembly	7-27
	4-7	806699	Holder - Exhaust and intake valve	
	4-36	806702	Holder - Exhaust valve 3/4 inch diameter	
		801812	Stand - Valve removing and installing bench	
	2-6	810298	Compressor - Valve spring	
		804351	Cover - Cylinder intake port	
		803837	Cover - Cylinder exhaust port (-76 Series)	
		808400D6	Cover - Front and rear cylinder exhaust port connection (-80 Series, -86A, -86B)	
		802112	Plug - Cylinder spark plug hole	
	4-36	807779	Wrench - Cylinder head thermocouple adapter lug	

TABLE 2-1. AGE FUNCTIONAL TOOL LIST - Continued

Group No.	Figure No.	Part No.	Nomenclature	Text
37			Diffuser Plate and Pin Assembly Attaching Nut	7-35
	7-32	802775	Wrench - Diffuser plate to supercharger rear housing attaching nut, crowfoot, 7/16 inch diameter (used with 804783)	
	7-32	804783	Wrench - Torque 0 - 100 inch-pounds	
		923125	Wrench - Diffuser plate to supercharger rear housing attaching nut, box, 7/16 inch diameter (used with 802178)	
		802178	Wrench - Torque pivot handle 300 inch-pounds	
38			Dual Accessory Drive Housing Attaching Nut	4-55 7-65
	4-39	800684	Wrench B - Oil pump foot and dual accessory drive housing to supercharger rear cover nut box 5/8 inch hexagon	
	4-39	804885	Wrench A - Oil pump to supercharger rear cover nut box 1/2 inch hexagon	
39			Dual Accessory Drive Housing Machining and Studding Assembly and Cover Bushings	6-767 6-768 6-769
	6-241	803846	Plug A - Dual accessory drive intermediate shaft front bushings, removing and installing	6-771 7-48
		803845	Plug C - Dual accessory drive front and rear bushing removing and installing	7-65
		806500	Plug D - Dual accessory drive housing cover bushing removing and installing	

TABLE 2-1. AGE FUNCTIONAL TOOL LIST - Continued

Group No.	Figure No.	Part No.	Nomenclature	Text
39 (Cont)		803847	Collar B - Dual accessory drive front and rear bushing, removing and installing	
	6-241	807193	Gage A - Dual accessory drive housing bushing hole limit plug 1.2475 - 1.2485 inches	
		807194	Gage B - Dual accessory drive housing bushing hole limit plug 1.2525 - 1.2535 inches	
		807195	Gage C - Dual accessory drive housing bushing hole limit plug 1.2575 - 1.2585 inches	
		807196	Gage D - Dual accessory drive housing bushing hole limit plug 1.2625 - 1.2635 inches	
		807197	Gage E - Dual accessory drive housing bushing hole limit plug 1.2775 - 1.2785 inches	
		807198	Gage F - Dual accessory drive housing bushing hole limit plug 1.123 - 1.124 inches	
		807199	Gage G - Dual accessory drive housing bushing hole limit plug 1.128 - 1.129 inches	
		807200	Gage H - Dual accessory drive housing bushing hole limit plug 1.133 - 1.134 inches	
		807201	Gage I - Dual accessory drive housing bushing hole limit plug 1.138 - 1.139 inches	
		807202	Gage - Dual accessory drive housing cover bushing hole limit plug 1.153 - 1.154 inches	
		807203	Gage J - Dual accessory drive housing bushing hole limit plug 0.9355 - 0.9365 inches	
		807204	Gage K - Dual accessory drive housing cover bushing hole limit plug 0.9405 - 0.9415 inches	
		807205	Gage L - Dual accessory drive housing cover bushing hole limit plug 0.9455 - 0.9465 inches	
		807206	Gage M - Dual accessory drive housing cover bushing hole limit plug 0.9505 - 0.9515 inches	
		807207	Gage N - Dual accessory drive housing cover bushing hole limit plug 0.9655 - 0.9665 inches	
		83162	Gage P - Dual accessory drive intermediate shaft front bushing limit plug 1.000 - 1.001 inches	
		805383	Gage S - Dual accessory drive housing and cover bushing hole limit plug 0.937 - 0.938 inches	
		83138	Gage - Single and dual type spare drive intermediate shaft bushing snap	
	6-241	809595	Jig - Michelling idler gear bushing flange face	
	7-42	806723	Installing Tool A - Dual accessory drive upper and lower accessory drive gear oil seal	
	7-61	806638	Installing Tool B - Dual accessory drive vacuum pump drive gear oil seal	

TABLE 2-1. AGE FUNCTIONAL TOOL LIST - Continued

Group No.	Figure No.	Part No.	Nomenclature	Text
40			Dual Accessory Drive Idler Gear	3-7 4-64
	4-50	803312	Fixture - Dual accessory drive idler gear and intermediate gear assembling, vise	7-48
	4-50	82914	Wrench - Dual accessory drive idler gear to intermediate gear screw open end, 7/16 inch hexagon	
41			Electrical Tachometer Drive Shaft Gear Oil Seal Assembly	4-68 7-49 7-64
	4-49	923073	Puller - Electrical tachometer drive shaft gear oil seals removing	
	7-47	923087	Installing Tool A - Electrical tachometer drive shaft gear oil seals	
	7-60	923152	Installing Tool B - Tachometer drive shaft gear housing cover oil seals to shafts	
42			Engine General	3-7 5-61
	3-2	808269	Stand - Engine assembling and disassembling	8-3
		870060	Test Mount - Engine assembling and disassembling stand (used with 808269 stand and 808271 cradle)	8-21 10-3 10-14
		807069	Stand - Engine disassembling and assembling cantilever type	
		808270	Cradle - Engine assembling and disassembling stand (used with 808269 stand) (non-test mount type)	
		808271	Cradle - Engine assembling and disassembling stand (used with 808279 stand) (test mount type)	
		808273	Bracket - Engine assembling and disassembling stand cradle (used with 808269 stand) (non-test mount type)	
	5-5	808921	Fixture - Push rod assembling flushing	
	8-26	805977	Indicator - Piston position	
	8-26	805943	Pivot Arm - Piston position indicator	
	8-26	805940	Scale - Piston position indicator	
	8-26	806793	Slide Pointer - Piston position indicator	
		900266	Sling - Complete assembly engine hoist	
		800315	Wrench - Timing hole plug and oil sump drain plug combination box and open end 3/4 inch and 7/8 inch hexagon	

TABLE 2-1. AGE FUNCTIONAL TOOL LIST - Continued

Group No.	Figure No.	Part No.	Nomenclature	Text
42 (Cont)		803177	Screw Driver - Bosch and Scintilla magneto block insulated wire locking, fillister head screw	
		804448	Pliers - Magneto block and wire fastening washer assembling	
43			Exhaust Valve	4-50 6-133 6-496 7-27
	4-36	806702	Holder - Exhaust valve 3/4 inch diameter	
	6-152	807788	Gage - Exhaust valve regrind limit	
		807256	Gage - Exhaust valve bluing 0.7455 - 0.7460 inch valve stem diameter	
		804809	Gage - Exhaust valve regrind limits	
		804398	Gage - Exhaust valve bluing	
44			Exhaust Valve Guide	6-474 6-475 6-476 6-477 6-479 6-481 6-484 6-487 6-489 6-491 6-493
	6-21	806770	Gage - Exhaust valve guide valve stem hole maximum wear flat plug 0.7545 inch diameter	
	6-144	805786	Fixture - Cylinder reconditioning drill press	
		808568	Drill - Exhaust valve guide removing 0.949 inch diameter	
	6-145	809931	Holder - Exhaust and intake valve guide and seat retaining, during cylinder heating	
		809932	Holder - Cylinder rocker arm shaft bushings retaining, during cylinder heating	
		803094	Holder - Cylinder head heating	
		802622	Nozzle - Cylinder head heating air and gas hose attachment or equiv.	
	6-145	810389	Remover - Exhaust valve guide water cooled	
		807969	Gage - Exhaust valve guide boss length checking 1.405 inches	
		802860	Gage - Exhaust valve guide cylinder hole limit plug 0.972 - 0.973 inch diameter	
		802861	Gage - Exhaust valve guide cylinder hole limit plug 0.977 - 0.978 inch diameter	
		802862	Gage - Exhaust valve guide cylinder hole limit plug 0.987 - 0.988 inch diameter	
		802863	Gage - Exhaust valve guide cylinder hole limit plug 0.997 - 0.998 inch diameter	
		802864	Gage - Exhaust valve guide cylinder hole limit plug 1.007 - 1.008 inch diameter	
		805685	Gage - Exhaust valve guide cylinder hole limit plug 1.017 - 1.018 inch diameter	

TABLE 2-1. AGE FUNCTIONAL TOOL LIST - Continued

Group No.	Figure No.	Part No.	Nomenclature	Text
44 (Cont)		805687	Gage - Exhaust valve guide cylinder hole limit plug 1.027 - 1.028 inch diameter	
		805691	Gage - Exhaust valve guide cylinder hole limit plug 1.037 - 1.038 inch diameter	
		807606	Gage - Exhaust valve guide cylinder hole limit plug 1.047 - 1.048 inches diameter	
		807607	Gage - Exhaust valve guide cylinder hole limit plug 1.057 - 1.058 inches diameter	
		807608	Gage - Plug limit 1.067 - 1.068 inches	
	6-146	805092	Guide - Exhaust valve dummy 0.9718 inch diameter	
		805093	Guide - Exhaust valve dummy 0.9768 inch diameter	
		805094	Guide - Exhaust valve dummy 0.9868 inch diameter	
		805095	Guide - Exhaust valve dummy 0.9968 inch diameter	
		805096	Guide - Exhaust valve dummy 1.0068 inches diameter	
		805692	Guide - Exhaust valve dummy 1.0168 inches diameter	
		805693	Guide - Exhaust valve dummy 1.0268 inches diameter	
		805695	Guide - Exhaust valve dummy 1.0368 inches diameter	
		807600	Guide - Exhaust valve dummy 1.0468 inches diameter	
		807601	Guide - Exhaust valve dummy 1.0568 inches diameter	
		807602	Guide - Exhaust valve dummy 1.0668 inches diameter	
		807167	Gage - Exhaust valve guide boss length checking 1.480 inches	
		807168	Gage - Exhaust valve guide boss length checking 1.470 inches	
		807169	Gage - Exhaust valve guide boss length checking 1.460 inches	
		807170	Gage - Exhaust valve guide boss length checking 1.450 inches	
		807171	Gage - Exhaust valve guide boss length checking 1.440 inches	
		807631	Gage - Exhaust valve guide boss length checking 1.430 inches	

TABLE 2-1. AGE FUNCTIONAL TOOL LIST - Continued

Group No.	Figure No.	Part No.	Nomenclature	Text
44 (Cont)		807635	Gage - Exhaust valve guide boss length checking 1.420 inches	
		807632	Gage - Exhaust valve guide boss length checking 1.410 inches	
		809613	Arbor - Cylinder barrel grinding	
	6-146	807610	Spacer - Cylinder exhaust valve guide hole chamfering and boss facing cutter bar	
	6-146	807611	Cutter - Cylinder exhaust valve guide hole chamfering and boss facing 1.09 - 1.12 inches	
		807612	Cutter - Cylinder exhaust valve guide hole chamfering and boss facing 1.10 - 1.13 inches	
		807613	Cutter - Cylinder exhaust valve guide hole chamfering and boss facing 1.11 - 1.14 inches	
		807614	Cutter - Cylinder exhaust valve guide hole chamfering and boss facing 1.12 - 1.15 inches	
		807615	Cutter - Cylinder exhaust valve guide hole chamfering and boss facing 1.13 - 1.16 inches	
		807616	Cutter - Cylinder exhaust valve guide hole chamfering and boss facing 1.14 - 1.17 inches	
		807617	Cutter - Cylinder exhaust valve guide hole chamfering and boss facing 1.15 - 1.18 inches	
		807618	Cutter - Cylinder exhaust valve guide hole chamfering and boss facing 1.16 - 1.19 inches	
		807619	Cutter - Cylinder exhaust valve guide hole chamfering and boss facing 1.17 - 1.20 inches	
		807620	Cutter - Cylinder exhaust valve guide hole chamfering and boss facing 1.18 - 1.21 inches	
	6-146	807155	Bar - Cylinder exhaust valve guide hole chamfering and boss facing cutter	
		807621	Gage - Cylinder exhaust valve guide hole chamfering and boss facing cutter setting 1.09 - 1.12 inches	

TABLE 2-1. AGE FUNCTIONAL TOOL LIST - Continued

Group No.	Figure No.	Part No.	Nomenclature	Text
44 (Cont)		807622	Gage - Cylinder exhaust valve guide hole chamfering and boss facing cutter setting 1.10 - 1.13 inches	
		807623	Gage - Cylinder exhaust valve guide hole chamfering and boss facing cutter setting 1.11 - 1.14 inches	
		807624	Gage - Cylinder exhaust valve guide hole chamfering and boss facing cutter setting 1.12 - 1.15 inches	
		807625	Gage - Cylinder exhaust valve guide hole chamfering and boss facing cutter setting 1.13 - 1.16 inches	
		807626	Gage - Cylinder exhaust valve guide hole chamfering and boss facing cutter setting 1.14 - 1.17 inches	
		807627	Gage - Cylinder exhaust valve guide hole chamfering and boss facing cutter setting 1.15 - 1.18 inches	
		807628	Gage - Cylinder exhaust valve guide hole chamfering and boss facing cutter setting 1.16 - 1.19 inches	
		807629	Gage - Cylinder exhaust valve guide hole chamfering and boss facing cutter setting 1.17 - 1.20 inches	
		807630	Gage - Cylinder exhaust valve guide hole chamfering and boss facing cutter setting 1.18 - 1.21 inches	
	6-149	808428	Arbor - Exhaust valve guide installing	
		806769	Gage - Exhaust valve guide valve stem hole limit plug 0.7505 - 0.7515 inch diameter	
		802842	Punch - Exhaust valve guide removing	
45			Exhaust Valve Guide Retainer Sleeve	6-482 6-484
	6-150	808431	Installing Tool - Exhaust valve guide retainer sleeve to exhaust valve guide	
	6-150	808429	Swaging Tool - Exhaust valve guide retainer sleeve to exhaust valve guide	
		809633	Gage - Snap exhaust valve guide retainer sleeve 0.9995 - 1.007 inches diameter	
	6-150	809372	Bar - Exhaust valve guide sleeve chamfering 0.735 inch diameter	
	6-150	805583	Tool Bit - Exhaust valve guide sleeve chamfering	

TABLE 2-1. AGE FUNCTIONAL TOOL LIST - Continued

Group No.	Figure No.	Part No.	Nomenclature	Text
46			Exhaust Valve Oil Seal Ring Spacer Retainer Assembly	4-50
		807779	Puller - Exhaust valve spacer retainers removing	
		808193	Remover and Installer - Exhaust valve guide oil seal ring	
47			Exhaust Valve Seat	6-140 6-475
		809036	Gage - Limit exhaust valve seat maximum regrind 45 degrees	6-477 6-478
		809389	Gage - Limit exhaust valve seat maximum regrind 38 degrees	6-481 6-485
	6-145	809888	Remover - Water cooled exhaust valve seat	
		808735	Remover - Exhaust valve seat copper ring 3.170 inches diameter	
		807476	Punch - Intake and exhaust valve seats removing	
	6-146	807158	Holder - Cylinder exhaust valve seat recess counterbore cutter floating	
	6-146	807379	Cutter - Exhaust valve seat recess counterbore 0.020 inch oversize, 3.6325 inches diameter	
		807381	Cutter - Exhaust valve seat recess counterbore 0.040 inch oversize, 3.6525 inches diameter	
		808768	Cutter - Exhaust valve seat recess counterbore 0.060 inch oversize, 3.6725 inches diameter	
		809452	Cutter - Exhaust valve seat recess counterbore 0.080 inch oversize, 3.6925 inches diameter	
		809488	Cutter - Exhaust valve seat recess counterbore 0.100 inch oversize, 3.7125 inches diameter	
		807760	Cutter - Exhaust valve seat recess counterbore 0.020 inch oversize, 3.5790 inches diameter	
		807762	Cutter - Exhaust valve seat recess counterbore 0.040 inch oversize, 3.5990 inches diameter	
		808899	Cutter - Exhaust valve seat recess counterbore 0.080 inch oversize, 3.6390 inches diameter	
		808901	Cutter - Exhaust valve seat recess counterbore 0.100 inch oversize, 3.6590 inches diameter	
	6-146	806904	Bar - Intake and exhaust valve seat recess counterbore cutter	
		807370	Gage - Depth exhaust valve seat recess maximum standard	
		806973	Gage - Depth exhaust valve seat recess maximum 38 degrees	

TABLE 2-1. AGE FUNCTIONAL TOOL LIST - Continued

Group No.	Figure No.	Part No.	Nomenclature	Text
47 (Cont)		810254	Gage - Depth exhaust valve seat recess maximum 0.020 inch oversize	
		810255	Gage - Depth exhaust valve seat recess maximum 0.040 inch oversize.	
		810256	Gage - Depth exhaust valve seat recess maximum 0.050 inch oversize	
		807188	Gage - Cylinder intake and exhaust valve guide boss hole and seat recess squareness 0.9445 - 1.0105 inches diameter hole	
		807390	Gage - Cylinder exhaust valve guide boss hole and seat recess squareness 1.0078 - 1.0678 inches diameter	
		806946	Gage - Cylinder exhaust valve guide hole and seat recess, concentricity	
		807389	Gage - Cylinder exhaust valve guide boss hole and seat recess concentricity 1.0078 - 1.0678 inches diameter	
	6-149	810232	Installer - Exhaust valve seat	
		808048	Gage - Bluing exhaust valve seat 0.7500 inches diameter	
		809379	Gage - Exhaust valve guide and seat concentricity checking 0.7505 - 0.7515 inches stem holes	
		804400	Gage - Bluing, exhaust valve seat 0.7500 inch pilot diameter	
48			Front and Rear Crankshaft Counterweight Bushing and Rear Crankshaft Counterweight Bearing	6-348 6-349 6-350
	6-94	803124	Support - Front and rear counterweight bushing removing and installing	6-351 6-352
	6-94	804087	Spacer - Front and rear counterweight bushing removing and installing	6-353 6-356
	6-94, 6-98	804081	Plug - Front and rear crankshaft counterweight bushings and front and rear counterweight bushings removing and installing	6-358 6-360 6-362 6-363
	6-94, 6-98	805248	Bushing - Front crankshaft counterweight bushing removing and installing pilot	6-364 6-365
		804091	Bushing - Rear counterweight bushing removing and installing pilot	6-367 6-369
	6-94	810005	Fixture - Grinding front and rear counterweight bushing holes	6-371
	6-94	810035	Block - Riser counterweight rear bushing bore	
		810036	Block - Riser counterweight front bushing bore	

TABLE 2-1. AGE FUNCTIONAL TOOL LIST - Continued

Group No.	Figure No.	Part No.	Nomenclature	Text
48 (Cont)	6-94	810029	Plug - Locating rear counterweight bushing hole	
	6-95	805249	Bushing - Front counterweight bushing installing pilot	
	6-95	804094	Bushing - Rear counterweight bushing installing pilot	
	6-95	805139	Gage - Front and rear counterweight bushings snap	
	6-95	805277	Bar - Counterweight bushing hole alignment checking	
		84869	Bar - Crankshaft rear counterweight bushing hole alignment checking	
	6-96, 6-98	804096	Bushing - Rear crankshaft counterweight bushing removing and installing pilot	
		810068	Fixture - Grinding, front crankshaft counterweight oversize bushing holes	
		810068D11	Plug - Front crankshaft counterweight oversize bushing holes grinding, fixture	
	6-98	804088	Collar - Front and rear crankshaft counterweight bushing installing	
	6-99	803679	Fixture - Rear crankshaft counterweight bearing hand reaming	
	6-99	807905	Reamer - Rear crankshaft counterweight bearing 1.9008 inches diameter	
		810663	Bushing - Pilot, front counterweight bushing, removing and installing	
		810028	Plug - Locating, front counterweight bushing holes	
		810028D1	Plug - Locating, front counterweight bushing holes, Std. - 0.008 inch oversize	
		810028D2	Plug - Locating front counterweight bushing holes, 0.010 - 0.016 inch oversize	
		810037	Block - Riser, counterweight front bushing bore	
		808929	Base - Front crankshaft counterweight bushings, installing	
		808930	Base - Rear crankshaft counterweight bushings, installing	
		808931	Spacer - Front and rear crankshaft counterweight bushings, installing	
		808932	Gage - Front and rear crankshaft counterweight bushings, space	
		808950	Bar - Front and rear counterweight bushings alignment checking	

TABLE 2-1. AGE FUNCTIONAL TOOL LIST - Continued

Group No.	Figure No.	Part No.	Nomenclature	Text
48 (Cont)		807922	Holder - Supercharger rear cover bushings reamer arbor, floating	
		804011	Gage - Crankshaft counterweight bearing limit plug, 1.900 - 1.901 inches diameter	
		807906	Arbor - Rear crankshaft counterweight bearings shell reamer or equiv.	
49			Front Oil Sump and Pump	8-17
	8-15	806750	Aligning Tool - Oil sump scavenge pump gear shaft	
50			Front Oil Sump and Pump Attaching Nut	4-25 8-17
		810041	Wrench - Torque front oil sump to crankcase front section and supercharger front housing attaching nuts	
51			Fuel Pump and Dual Accessory Drive Gear Shaft and Bushing	4-74 6-175 6-176
	4-54, 7-39	84657	Fixture - Tachometer fuel pump and dual accessory drive gear and shaft assembly vise	6-742 6-743 6-744
		810383	Gage - Spline checking	6-745
		810384	Jaw - Fuel pump drive gear internal	7-43
	6-231	803019	Tool Bit - Intermediate impeller drive shaft gear bushing finishing boring bar	
	6-231	803018	Boring Bar - Intermediate impeller drive shaft gear bushing finishing	
	6-231	805107	Adapter - Fuel pump and dual accessory drive gear shaft bushing removing and finishing boring bar	
	6-231	805827	Collet - Magic chuck or equiv.	
	6-231	83921	Chuck - Number 3 Morse taper magic or equiv.	
	6-231	806349	Gage - Supercharger rear cover magneto oil pump accessory and generator drive shaft bushing holes, limit plug, cover hole 1.4465 - 1.4475 inches	
		806350	Gage - Supercharger rear cover magneto oil pump accessory and generator drive shaft bushing holes, limit plug, cover hole 1.4565 - 1.4575 inches	

TABLE 2-1. AGE FUNCTIONAL TOOL LIST - Continued

Group No.	Figure No.	Part No.	Nomenclature	Text
51 (Cont)	6-231	806689	Plug - Installing generator fuel pump, magneto and tachometer drive shaft bushings, removing and installing arbor press	
	6-231	83875	Plug and Collar - Supercharger rear cover bushing replacement fixture	
	6-231	82243	Gage - Limit plug, 1.2175 - 1.2185 inches	
	6-231	82247	Cutter - Magneto and accessory drive gear shaft bushing, semi-finish	
		82246	Cutter - Magneto and accessory drive gear shaft bushing finish 1.418 inches diameter	
52			Fuel Pump Drive Shaft Oil Seal Assembly	4-69 4-70
	4-51	923228	Puller - Fuel pump drive shaft oil seal removing	7-47
	7-41	804439	Remover and Installer - Fuel pump and tachometer drive shaft oil seal arbor press	
53			Fuel Pump Drive Shaft Support	4-62 7-47
	4-43	923057	Puller - Tachometer and fuel pump drive shaft support removing	
	7-41	801719	Installing Tool - Fuel pump drive shaft oil seal	
54			Fuel Pump Drive Shaft Support Bushing and Fuel Pump Drive Shaft Thrust Button	6-71 6-71 6-71
	6-219	83835	Plug and Base - Tachometer and fuel pump drive shaft support bushing, installing, arbor press	6-73 6-74 6-74
		801005	Drill - Oil pump cover bushing pin hole Number 32, 0.116 inch	6-74 6-74
		802381	Reamer - Tachometer and fuel pump drive shaft support bushing pin hole machine	
	6-219	800824	Installing Tool - Tachometer and fuel pump drive shaft support bushing pin	
	6-230	805854	Drill - Gun synchronizer drive shaft thrust button, spot 11/16 inch diameter	
		808351	Drill - Gun synchronizer drive shaft and tachometer and fuel pump drive shaft thrust button tap 13/64 inch diameter	
	6-230	808352	Tap - Gun synchronizer drive shaft and tachometer and fuel pump drive shaft	

TABLE 2-1. AGE FUNCTIONAL TOOL LIST - Continued

Group No.	Figure No.	Part No.	Nomenclature	Text
57 (Cont)	6-49	804813	Pilot - Governor and distributor drive gear shaft bushing counterbore cutter 1.0075 inches diameter	
	6-49	805729	Holder - Counterbore and countersink or equiv.	
	6-49	83622	Fixture - Governor drive gear shaft bushing reaming bench	
	6-49	923248	Reamer - Governor and torque indicator booster pump drive gear shaft bushings hand 1.0228 inches diameter	
	6-49	83666	Gage - Governor drive gear shaft bushing bore limit plug 1.023 - 1.022 inches	
	6-50	803905	Boring Bar - Governor and torque indicator booster pump drive gear shaft bushing facing and chamfering drill press	
	6-50	803906	Tool Bit - Governor and torque indicator booster pump drive gear shaft bushing facing and chamfering boring bar	
	6-50	800996	Gage - Governor and torque indicator booster pump drive gear shaft bushing shoulder face flush pin	
58			Gun Synchronizing Impulse Generator Drive Substituting Cover Thrust Button and Magneto Bushing	4-59 6-727 6-728 6-729
	4-43	806634	Puller - Multi-purpose removing impact 3/8-24 thread	6-730 6-731
	4-43	806681	Adapter - Gun synchronizer impulse generator drive substituting cover impact removing puller	6-732 6-733 6-734
	6-226	82245	Collar - Tachometer fuel pump and gun synchronizer drive shaft thrust bushing, removing	6-735
	6-226	805854	Drill - Gun synchronizer drive shaft thrust button spot, 11/16 inch diameter	
		808351	Drill - Gun synchronizer drive shaft and tachometer and fuel pump drive shaft thrust button tap 13/64 inch diameter	
	6-226	808352	Tap - Gun synchronizer drive shaft and tachometer and fuel pump drive shaft thrust button 1/4-20 thread or equiv.	
	6-226	808357	Screw and Nut - Gun synchronizer drive shaft and tachometer and fuel pump drive shaft thrust button removing	

TABLE 2-1. AGE FUNCTIONAL TOOL LIST - Continued

Group No.	Figure No.	Part No.	Nomenclature	Text
58 (Cont)	6-227	802993	Tool Bit - Oil pump magneto and spare drive shaft bushing removing and finishing boring bar	
	6-227	802981	Boring Bar - Supercharger rear cover bushings removing and finishing	
	6-227	802992	Adapter - Magneto drive gear shaft bushing removing and finishing boring bar	
	6-227	805827	Collet - Magic chuck or equiv.	
	6-227	83921	Chuck - Number 3 Morse taper magic or equiv.	
	6-227	806349	Gage - Supercharger rear cover magneto oil pump accessory and generator drive shaft bushing holes, limit plug, cover hole 1.4565 - 1.4575 inches	
		806350	Gage - Supercharger rear cover magneto oil pump accessory and generator drive shaft bushing holes, limit plug, cover hole 1.4565 - 1.4575 inches	
	6-227	806689	Plug - Installing generator fuel pump magneto and tachometer drive shaft bushings, removing and installing arbor press	
	6-227	83875	Plug and Collar - Supercharger rear cover bushing replacement fixture	
	6-227	82243	Gage - Limit plug 1.2175 - 1.2185 inches	
	6-227	82247	Cutter - Magneto and accessory drive gear shaft bushing, semi-finish	
		82246	Cutter - Magneto and accessory drive gear shaft bushing finish 1.418 inches diameter	
	6-228	808354	Bushing - Gun synchronizer shaft thrust button hole drill	
	6-228	808353	Reamer - Gun synchronizer drive shaft and tachometer and fuel pump drive shaft thrust button hole 0.8378 inch diameter	
	6-228	805853	Punch - Gun synchronizer tachometer and fuel pump drive shaft thrust button, installing	
59			Headless Screw Bushing	6-202 6-203
		801160	Removing Tool - Stud 3/8-16 inch standard	6-204
		801163	Removing Tool - Miscellaneous stud	6-205
		801165	Removing Tool - Stud 9/16-12 thread	
		805531	Removing Tool - Screw bushing 7/16-20 thread or equiv.	
		809734	Tap - 7/16-20 thread, 0.003 inch oversize	
		809735	Tap - 7/16-20 thread, 0.007 inch oversize	

TABLE 2-1. AGE FUNCTIONAL TOOL LIST - Continued

Group No.	Figure No.	Part No.	Nomenclature	Text
58 (Cont)	6-227	802993	Tool Bit - Oil pump magneto and spare drive shaft bushing removing and finishing boring bar	
	6-227	802981	Boring Bar - Supercharger rear cover bushings removing and finishing	
	6-227	802992	Adapter - Magneto drive gear shaft bushing removing and finishing boring bar	
	6-227	805827	Collet - Magic chuck or equiv.	
	6-227	83921	Chuck - Number 3 Morse taper magic or equiv.	
	6-227	806349	Gage - Supercharger rear cover magneto oil pump accessory and generator drive shaft bushing holes, limit plug, cover hole 1.4565 - 1.4575 inches	
		806350	Gage - Supercharger rear cover magneto oil pump accessory and generator drive shaft bushing holes, limit plug, cover hole 1.4565 - 1.4575 inches	
	6-227	806689	Plug - Installing generator fuel pump magneto and tachometer drive shaft bushings, removing and installing arbor press	
	6-227	83875	Plug and Collar - Supercharger rear cover bushing replacement fixture	
	6-227	82243	Gage - Limit plug 1.2175 - 1.2185 inches	
	6-227	82247	Cutter - Magneto and accessory drive gear shaft bushing, semi-finish	
		82246	Cutter - Magneto and accessory drive gear shaft bushing finish 1.418 inches diameter	
	6-228	808354	Bushing - Gun synchronizer shaft thrust button hole drill	
	6-228	808353	Reamer - Gun synchronizer drive shaft and tachometer and fuel pump drive shaft thrust button hole 0.8378 inch diameter	
	6-228	805853	Punch - Gun synchronizer tachometer and fuel pump drive shaft thrust button, installing	
59			Headless Screw Bushing	6-202 6-203
		801160	Removing Tool - Stud 3/8-16 inch standard	6-204
		801163	Removing Tool - Miscellaneous stud	6-205
		801165	Removing Tool - Stud 9/16-12 thread	
		805531	Removing Tool - Screw bushing 7/16-20 thread or equiv.	
		809734	Tap - 7/16-20 thread, 0.003 inch oversize	
		809735	Tap - 7/16-20 thread, 0.007 inch oversize	

TABLE 2-1. AGE FUNCTIONAL TOOL LIST - Continued

Group No.	Figure No.	Part No.	Nomenclature	Text
59 (Cont)		809736	Tap - 7/16-20 thread, 0.012 inch oversize	
		809737	Tap - 1/2-20 thread, 0.003 inch oversize	
		809738	Tap - 1/2-20 thread, 0.007 inch oversize	
		809739	Tap - 1/2-20 thread, 0.012 inch oversize	
		809740	Tap - 9/16-18 thread, 0.003 inch oversize	
		809741	Tap - 9/16-18 thread, 0.007 inch oversize	
		809742	Tap - 9/16-18 thread, 0.012 inch oversize	
		809743	Tap - 5/8-18 thread, 0.003 inch oversize	
		809744	Tap - 5/8-18 thread, 0.007 inch oversize	
		809745	Tap - 5/8-18 thread, 0.012 inch oversize	
		802820	Installing Tool - Screw bushing 1/4-28 thread	
		802821	Installing Tool - Screw bushing 5/16-24 thread	
		802822	Installing Tool - Screw bushing 3/8-24 thread	
		806129	Installing Tool - Screw bushing 7/16-20 thread	
		806486	Wrench - Screw bushing installing tool 5/8 inch hexagon x 3/8 inch square drive	
		802139	Wrench - Oil pressure relief valve cap 7/8 inch hexagon x 1/2 inch square drive	
		802178	Wrench - Torque pivot handle 300 inch-pounds	
		84922	Wrench - Torque 1200 inch-pounds	
		83642	Tap - Screw bushing 5/16-24 thread	
		800643	Tap - Screw bushing 1/4-28 thread	
		802832	Tap - Screw bushing 3/8-24 thread standard	
		805795	Tap - Screw bushing 7/16-20 thread standard	
60			Hexagon Head Screw Bushing	6-215 6-216 6-217
		801159	Removing Tool - Stud 5/16-18 and 5/16-24 thread	
		801160	Removing Tool - Stud 3/8-16 thread standard	
		801163	Removing Tool - Miscellaneous stud	
		801165	Removing Tool - Stud 9/16-12 thread	
		805531	Removing Tool - Screw bushing 7/16-20 thread or equiv.	
		809734	Tap - 7/16-20 thread, 0.003 inch oversize	
		809735	Tap - 7/16-20 thread, 0.007 inch oversize	
		809736	Tap - 7/16-20 thread, 0.012 inch oversize	
		809737	Tap - 1/2-20 thread, 0.003 inch oversize	
		809738	Tap - 1/2-20 thread, 0.007 inch oversize	
		809739	Tap - 1/2-20 thread, 0.012 inch oversize	
		809740	Tap - 9/16-18 thread, 0.003 inch oversize	
		809741	Tap - 9/16-18 thread, 0.007 inch oversize	
		809742	Tap - 9/16-18 thread, 0.012 inch oversize	
		809743	Tap - 5/8-18 thread, 0.003 inch oversize	
		809744	Tap - 5/8-18 thread, 0.007 inch oversize	

TABLE 2-1. AGE FUNCTIONAL TOOL LIST - Continued

Group No.	Figure No.	Part No.	Nomenclature	Text
60 (Cont)		809745	Tap - 5/8-18 thread, 0.012 inch oversize	
		805777	Wrench - Fuel injection pump drive bevel pinion bracket bushing removing and installing fixture nut socket 9/16 inch hexagon	
		806486	Wrench - Screw bushing installing tool 5/8 inch hexagon x 3/8 inch square drive	
		802178	Wrench - Torque pivot handle 300 inch-pounds	
		84922	Wrench - Torque 1200 inch-pounds	
		82297	Holder - Counterbore cutter or equiv.	
		800976	Cutter - Screw bushing facing counterbore 1/2 inch diameter	
		805794	Countersink - Hexagon head screw bushing 5/8 inch x 82 degrees	
		804458	Pilot and Nut - Hexagon head screw bushing facing cutter or equiv.	
		808863	Wrench - Open end, generator and starter attaching nut, 9/16 inch	
		808864	Wrench - Generator starter attaching nut, 9/16 inch box end	
61			Ignition Manifold	7-72
	2-12	806942	Puller - Ignition wires through magneto block	
62			Impeller Drive Gear and Pinion Support	4-73
		923146	Puller - Supercharger rear cover impeller drive gear and pinion support, removing	
63			Impeller Drive Multi-Plate Clutch Housing and Cam Bushing	4-72 6-703 6-704
	4-53	923052	Puller - Impeller drive multi-plate clutch sleeve and piston removing	7-45
	6-217	803082	Ring - Impeller low speed drive clutch cam bushing	
	6-217	803081	Plug - Impeller low speed drive clutch cam bushing installing arbor press	
	7-40	84692	Installing Tool - Two speed supercharger impeller drive	

TABLE 2-1. AGE FUNCTIONAL TOOL LIST - Continued

Group No.	Figure No.	Part No.	Nomenclature	Text
64			Impeller Intermediate Drive Gear Shaft and Pinion Support and Bushing Assembly	4-76 6-675 6-676
	4-55	806640	Fixture - Supercharger roller clutch intermediate impeller drive shaft cage and pinion assembly and disassembly vise	6-677 6-678 6-679
	6-213	923146	Puller - Supercharger rear cover impeller drive gear and pinion support removing	6-680 6-681
	6-213	923136	Fixture A - Impeller drive gear shaft support bushing, removing and boring, lathe	6-683 6-684
	6-213	923138	Plug - Impeller drive gear shaft front and rear bushings, installing	6-685 6-686
	6-213	923129	Bushing - Impeller drive gear shaft front bushing jig starting drill 0.1234 inch diameter	6-687 6-691
		923130	Bushing - Impeller drive gear shaft front bushing jig starting drill 0.1254 inch diameter	6-692 6-693
		923131	Bushing - Impeller drive gear shaft front bushing jig starting drill 0.1334 inch diameter	6-696 6-697
	6-213	83802	Drill A - Cam and hub bearing lockpin hole extension 1/16 inch diameter	7-40 7-55
		801550	Drill B - 1/8 inch diameter	
	6-213	805504	Reamer - Impeller drive gear shaft outer bushing pin hole machine 0.1265 inch diameter	
		805506	Reamer - Impeller drive gear shaft outer bushing pin hole machine 0.1345 inch diameter	
		805508	Reamer - Impeller drive gear shaft outer bushing pin hole machine 0.1395 inch diameter	
	6-213	801614	Gage - Impeller drive gear shaft outer bushing pin hole, limit plug 0.1255 - 0.1265 inch diameter	
		801555	Gage - Impeller drive gear shaft outer bushing pin h de, limit plug 0.135 inch diameter	
		801556	Gage - Impeller drive gear shaft outer bushing pin hole, limit plug 0.1395 inch diameter	
	6-213	83052	Gage - Impeller drive gear shaft outer bushing limit plug, 1.315 - 1.316 inches diameter	
	6-213	923135	Cutter - Impeller drive gear shaft front bushing removing counterbore, 1.479 inch diameter	
	6-213	923134	Pilot and Nut - Impeller drive gear shaft front bushing removing counterbore, 1.479 inches diameter	
	6-213	805729	Holder - Counterbore and countersink or equiv.	
	6-213	806771	Fixture B - Impeller drive gear shaft outer bushing removing and hand line reaming	

TABLE 2-1. AGE FUNCTIONAL TOOL LIST - Continued

Group No.	Figure No.	Part No.	Nomenclature	Text
64 (Cont)	6-213, 6-214	801501	Tool Bit - Impeller drive gear shaft outer bushing, boring bar	
	6-213, 6-214	801500	Boring Bar - Impeller drive gear shaft outer bushing removing	
	6-213	808780	Gage - Impeller intermediate drive shaft front bushing limit plug 1.509 - 1.510 inches	
	6-213	808418	Reamer - Supercharger rear housing impeller drive shaft front bushing 1.3165 - 1.3175 inches diameter	
	6-213	808419	Gage - Supercharger rear housing impeller drive shaft front bushing limit plug 1.3165 - 1.3175 inches diameter	
	6-214	801499	Bushing - Impeller drive gear shaft outer bushing, starter drill	
	6-214	801498	Drill - Impeller drive gear shaft outer bushings 1.3125 inches diameter	
	6-214	808577	Fixture C - Impeller drive gear shaft bushing removing and hand line reaming	
	6-214	801505	Fixture D - Impeller drive gear shaft outer bushing removing and installing arbor press	
	6-215	806564	Gage - Intermediate impeller drive gear bushing limit plug, 1.1042 - 1.1048 inches	
	6-215	803880	Polishing Tool - Intermediate impeller drive gear bushing face	
	6-215	803881	Gage - Intermediate impeller drive gear bushing face bluing	
	6-215	806559	Fixture E - Intermediate impeller drive gear bushing plating	
	6-216	803748	Base - Intermediate impeller drive shaft gear bushing, installing	
		810273	Gage - Limit plug 0.9382 - 0.9388 inches diameter	
	7-52	84761	Adapter - Intermediate impeller drive end play checking indicator	
65			Impeller Oil Seal Rings	8-26
	8-22	806806	Aligning Tool - Impeller shaft oil seal front sleeve ring	
66			Impeller Shaft Bearing Support	6-581 6-582
	6-185	801530	Adapter - Supercharger front housing impeller shaft bearing support honing fixture	6-585 6-589

TABLE 2-1. AGE FUNCTIONAL TOOL LIST - Continued

Group No.	Figure No.	Part No.	Nomenclature	Text
66 (Cont)	6-185	84294	Fixture - Supercharger rear housing sleeve honing	6-591
	6-185	806120	Hone - Supercharger front and rear housing impeller shaft sleeve and support, 2-3/16 and 2-1/2 inches diameter or equiv.	
			Stone Set - Supercharger front and rear housing impeller shaft sleeve and support hone roughing, 2-3/16 inches diameter or equiv.	
		806124	Stone Set - Supercharger front and rear housing impeller shaft sleeve and support hone finishing, 2-3/16 inches diameter or equiv.	
67			Impeller Shaft Front Bushing	6-598 6-600
		806865	Spacers A - Impeller shaft rear indicating	6-601
		806866	Spacers B - Impeller shaft front indicating	6-602
		806870	Spacer C - Impeller shaft torquing involute splined	6-603
		806867	Spacer D - Impeller shaft torquing	
		806868	Spacer E - Impeller shaft torquing	
		806862	Nut - Impeller shaft torquing	
		802392	Wrench - Impeller shaft oil seal front sleeve and nut socket, 2-3/16 inches hexagon	
	6-191	806863	Plug A - Impeller shaft front bushing removing and finishing centering	
	6-192	800091	Plug B - Impeller shaft front bushing installing arbor press	
	6-192	804749	Collar - Impeller shaft bushing installing	
		802700	Wrench - Double handle torque 7200 inch-pounds	
	6-193	82371	Gage - Impeller shaft front and rear bushing limit plug 1.312 - 1.313 inches diameter	
		82361	Bar - Impeller shaft front and rear bushing aligning	
68			Impeller Shaft Front Nut	4-66 7-39
	4-45, 7-36	807706	Support - Impeller shaft front nut lug wrench piloting	
	4-40, 7-36	82267	Wrench - Impeller shaft front nut lug	
	4-45	81402	Handle - General use 7/8 inch diameter	
	7-36	802700	Wrench - Double handle torque 7200 inch-pounds	

TABLE 2-1. AGE FUNCTIONAL TOOL LIST - Continued

Group No.	Figure No.	Part No.	Nomenclature	Text
69			Impeller Shaft Rear Bushing	6-599 6-601
	6-191	806864	Plug A - Impeller shaft rear bushing removing and finishing centering	6-603
	6-192	800053	Plug B - Impeller shaft rear bushing installing arbor press	
70			Impeller Shaft Retainer Screw	
	2-11	84463	Punch - Impeller shaft retainer screw staking	
71			Intake and Exhaust Cam	8-9
	8-6	807190	Indicator - Front and rear cam timing checking	
	8-6	807103	Adapter - Crankcase front section top dead center indicator	
72			Intake Pipe Packing Nut	4-13 8-25
	4-4	805866	Wrench - Intake pipe packing nut lug	
73			Intake Valve	4-50 6-113
	4-7	806699	Holder - Exhaust and intake valve	6-496
	6-152	807787	Gage - Intake valve regrind limit	7-27
		807575	Gage - Intake valve bluing	
		803202	Gage - Intake valve bluing	
		805590	Gage - Intake valve regrind limit	
74			Intake Valve Guide	6-138 6-465
	6-21	82664	Gage - Intake and exhaust valve guide valve stem hole maximum wear flat plug 0.690 inch diameter	6-467 6-468 6-470
	6-143	805786	Fixture - Cylinder, reconditioning drill press	6-472
	6-143	802839	Drill - Intake valve guide removing	
	6-143	802841	Punch - Intake valve guide removing	
	6-143	805781	Cutter - Intake and exhaust valve guide cylinder hole countersink	
		803750	Gage C - Front oil pump drive gear shaft bushing limit plug 0.937 - 0.938 inch diameter	
		802856	Gage D - Intake and exhaust valve guide cylinder hole, limit plug 0.942 - 0.943	

TABLE 2-1. AGE FUNCTIONAL TOOL LIST - Continued

Group No.	Figure No.	Part No.	Nomenclature	Text
74 (Cont)			inch diameter	
		802857	Gage E - Intake and exhaust valve guide cylinder hole, limit plug 0.947 - 0.948 inch diameter	
		802858	Gage F - Intake and exhaust valve guide cylinder hole, limit plug 0.957 - 0.958 inch diameter	
		802859	Gage G - Intake and exhaust valve guide cylinder hole, limit plug 0.967 - 0.968 inch diameter	
	6-143	806149	Arbor - Intake and exhaust valve guide installing	
		82641	Gage L - Intake and exhaust valve guide, valve stem hole, limit plug 0.686 - 0.687 inch diameter	
		807958	Gage - Intake valve guide and seat concentricity checking	
75			Intake Valve Seat	6-140 6-466
		806773	Gage - Intake valve seat 0.685 inch pilot diameter bluing	6-467 6-468
		804399	Gage - Bluing, intake valve seat 0.6855 inch pilot diameter	6-469 6-470
		84975	Protector - Cylinder bore	6-475
		800207	Stand - Intake (steel) and exhaust valve seat removing bench	
		802867	Drift - Intake valve seat removing	
		805097	Guide - Intake valve dummy 0.9418 inch diameter standard	
		802622	Nozzle - Cylinder head heating air and gas hose attachment or equiv.	
		803094	Holder - Cylinder head heating	
	6-143	805098	Guide - Intake valve dummy 0.9418 inch diameter 0.005 inch oversize	
		805099	Guide - Intake valve dummy 0.9468 inch diameter 0.010 inch oversize	
		805100	Guide - Intake valve dummy 0.9568 inch diameter 0.020 inch oversize	
	6-143	807382	Cutter A - Intake valve seat recess counterbore 0.010 inch oversize 3.5905 inches diameter	

TABLE 2-1. AGE FUNCTIONAL TOOL LIST - Continued

Group No.	Figure No.	Part No.	Nomenclature	Text
75 (Cont)		807383	Cutter B - Intake valve seat recess counterbore 0.020 inch oversize 3.6005 inches diameter	
		807384	Cutter C - Intake valve seat recess counterbore 0.030 inch oversize 3.6105 inches diameter	
		807385	Cutter D - Intake valve seat recess counterbore 0.040 inch oversize 3.6205 inches diameter	
	6-143	806904	Bar - Intake and exhaust valve seat recess counterbore cutter	
	6-143	807158	Holder - Cylinder exhaust valve seat recess counterbore cutter floating	
	6-143	809403	Gage A - Intake valve seat recess maximum depth	
		808552	Gage B - Intake and exhaust valve seat minimum corner radius and seat recess maximum corner radius checking, 0.090 - 0.100 inch	
		806954	Gage H - Cylinder intake and exhaust valve guide hole and seat recess concentricity for 0.9045 - 0.9445 inch diameter hole	
		806946	Gage I - Cylinder exhaust valve guide hole and seat recess concentricity	
		807189	Gage J - Cylinder intake and exhaust valve guide boss hole and seat recess squareness for 0.9045 - 0.9445 inch diameter hole	
		807188	Gage K - Cylinder intake and exhaust valve guide boss hole and seat recess squareness 0.9445 - 1.0105 inch diameter hole	
	6-143	807374	Installing Tool - Intake valve seat	
76			Intermediate Impeller Drive Shaft Front Bushing and Generator Drive Shaft Bushing	6-748 6-749 6-750
	6-233	802993	Tool Bit A - Oil pump magneto and spare drive shaft bushing removing and finishing boring bar	6-751 6-752 6-753
	6-233	802981	Boring Bar - Supercharger rear cover bushings removing and finishing	6-754
	6-233	804319	Adapter - Supercharger rear cover bushings removing and finishing drill press	
	6-233, 6-234	805827	Collet - Magic chuck or equiv.	
	6-233, 6-234	83921	Chuck - Number 3 Morse taper magic or equiv.	

TABLE 2-1. AGE FUNCTIONAL TOOL LIST - Continued

Group No.	Figure No.	Part No.	Nomenclature	Text
76 (Cont)	6-233	806349	Gage - Supercharger rear cover magneto oil pump accessory and generator drive shaft bushing holes, limit plug, cover hole 1.4465 - 1.4475 inches	
		806350	Gage - Supercharger rear cover magneto oil pump accessory and generator drive shaft bushing holes, limit plug, cover hole 1.4565 - 1.4575 inches	
	6-233	806689	Plug - Installing generator fuel pump, magneto and tachometer drive shaft bushings, removing and installing arbor press	
	6-233	83875	Plug and Collar - Supercharger rear cover bushing replacement, fixture	
	6-233	805859	Holder - Generator drive shaft bushing cutter or equiv.	
	6-233	805858	Cutter - Generator drive shaft bushing facing 1-13/16 inches diameter or equiv.	
	6-233	804893	Pilot and Nut - Supercharger rear cover generator gear shaft and bushing chamfering and facing cutters 1.1965 inches	
	6-233	805857	Cutter - Generator drive shaft bushing countersink, 1-3/4 inches diameter x 90 degrees or equiv.	
	6-233	82243	Gage - Limit plug 1.2175 - 1.2185 inches	
	6-234	805860	Tap - Intermediate impeller drive shaft bushing 1-1/8 inches diameter	
	6-234	805003	Puller - Intermediate impeller drive shaft rear bushing removing	
		806351	Gage - Supercharger rear cover intermediate impeller drive shaft bushing hole, cover hole 1.385 - 1.386 inches	
		806352	Gage - Supercharger rear cover intermediate impeller drive shaft bushing hole, cover hole 1.395 - 1.396 inches	
		806353	Gage - Supercharger rear cover intermediate impeller drive shaft bushing hole, cover hole 1.405 - 1.406 inches	
	6-234	800781	Installing Tool - Intermediate impeller drive shaft rear bushing	
	6-234	83873	Fixture - Intermediate impeller drive shaft rear bushing, line reaming	
	6-234	805108	Bushing - Intermediate impeller drive shaft bushing, boring bar	

TABLE 2-1. AGE FUNCTIONAL TOOL LIST - Continued

Group No.	Figure No.	Part No.	Nomenclature	Text
76 (Cont)	6-234	805110	Tool Bit B - Intermediate impeller drive shaft bushing finishing, drill press	
	6-234	805109	Boring Bar - Intermediate impeller drive shaft bushing	
	6-234	83877	Gage - Intermediate impeller shaft bushing, limit plug 0.9685 - 0.9695 inch	
77			Knuckle Pin and Knuckle Pin Bushing	6-89 6-90
	6-7	84304	Bar A - Articulated rod knuckle pin bushing finished bore alignment checking 1.1905 inches diameter	6-99 6-388 6-391
	6-7	806802	Bar B - Articulated rod knuckle pin bushing finished bore alignment checking 1.1915 inches diameter	6-393 6-395 6-396
	6-7	806803	Bar C - Articulated rod knuckle pin bushing finished bore alignment checking 1.1925 inches diameter	6-397 6-398 6-399
		83269	Gage - Knuckle pin bushing maximum wear flat plug 1.193 inches diameter	6-401
	6-110	808323	Collet - Knuckle pin regrinding	
		802158	Plug and Collar - Knuckle pin bushing removing, installing and burnishing arbor press	
		801930	Cutter - Knuckle pin bushing counterbore drill press	
		810203	Gage - Limit plug 1.2985 - 1.2995 inches	
		83373	Spinning Tool - Knuckle pin bushing	
		83415	Collar - Knuckle pin bushing spinning drill press, 1-3/16 inches diameter	
		83417	Collar - Knuckle pin bushing facing drill press, 1-3/16 inches diameter	
	6-114	83421	Pilot and Nut - Piston pin bushing and knuckle pin bushing, facing cutter	
		802206	Gage - Articulated rod knuckle pin bushing limit plug 1.1915 - 1.1920 inches diameter	
	6-115	803790	Fixture - Articulated rod knuckle pin bushing hole lead plating bench	
78			Knuckle Pin Locking Plate	4-36 7-20
	4-28	923076	Puller - Knuckle pin locking plate removing, impact	

TABLE 2-1. AGE FUNCTIONAL TOOL LIST - Continued

Group No.	Figure No.	Part No.	Nomenclature	Text
78 (Cont)		810600	Crimper, Locking - Knuckle pin retaining bolt and nut	
		810606	Gage, Stretch - Knuckle pin retaining bolt and nut	
79			Magneto Drive Gear	8-29
	8-28	82676	Wrench - Oil pump coupling	
80			Magneto Drive Gear to Magneto and Gun Synchronizer Drive Shaft Assembly	4-26 4-74 7-42
	4-54, 7-38	800096	Fixture - Magneto and gun synchronizer drive gear and shaft assembling vise	
81			Magneto Drive Oil Seal Assembly	4-74 7-55
	7-53	80332R	Installing Tool - Magneto and generator drive shaft oil seal	7-56
		800230	Drift - Magneto drive oil seal collar removing	
		800231	Installing Tool - Magneto drive oil seal collar	
		804854D1	Plug - Magneto drive oil seal removing and installing, arbor press	
		804854D2	Base - Magneto drive oil seal removing and installing	
82			Master Connecting Rod	6-89 6-384
	6-7	804022	Bar - Master rod and articulated rod piston pin hole alignment checking 1.6245 inches diameter	6-385 6-386
	6-7	804655	Bar - Master rod knuckle pin hole alignment checking 1.1485 - 1.1985 inches diameter	
		808733	Fixture - Master rod knuckle pin holes grinding or equiv.	
		807119	Gage - Master rod knuckle pin bore checking, 1.145 - 1.270 inches	
		807659	Gage - Master rod knuckle pin bore checking gage, master ring 1.1510 inches	
		807660	Gage - Master rod knuckle pin bore checking gage, master ring 1.1560 inches	
		807661	Gage - Master rod knuckle pin bore checking gage, master ring 1.1610 inches	

TABLE 2-1. AGE FUNCTIONAL TOOL LIST - Continued

Group No.	Figure No.	Part No.	Nomenclature	Text
82 (Cont)		807662	Gage - Master rod knuckle pin bore checking gage, master rod 1.1660 inches	
		807663	Gage - Master rod knuckle pin bore checking gage, master ring 1.2010 inches	
		807664	Gage - Master rod knuckle pin bore checking gage, master ring 1.2060 inches	
		807665	Gage - Master rod knuckle pin bore checking gage, master ring 1.2110 inches	
		807666	Gage - Master rod knuckle pin bore checking gage, master ring 1.2160 inches	
		810140	Gage - Ring master rod knuckle pin bore checking gage master 1.2035 inches	
		810142	Gage - Ring master rod knuckle pin bore checking gage master 1.2085 inches	
	6-109	923410	Gage - Articulated rod shot peening test strip indicator	
	6-109	808478	Almen Strip - Master rod knuckle pin holes and connecting rod and bearing splines shot peen testing or equiv.	
	6-109	808474	Holder - Almen test strip shot peening fixture	
	6-109	808481	Fixture - Master rod knuckle pin holes shot peening	
		808617	Fixture - Articulated and master rod piston pin bushings shot peening	
	6-109	808477	Turntable Unit - Master rod knuckle pin holes and connecting rod and bearing splines shot peening	
	6-109	808475	Bracket - Master rod knuckle pin holes shot peen nozzle holding cabinet	
		808378	Fixture - Master rod knuckle pin holes honing	
		807132	Holder - Master rod knuckle pin holes hone	
		807133	Hone Body - Master rod knuckle pin bores 1.1535 - 1.1685, 1.2035 - 1.2185 and 1.255 - 1.265 inches	
		807131	Bushing - Master rod knuckle pin holes honing bar actuating	
		807130	Holder - Master rod knuckle pin holes hone stone (1.1535 - 1.1685 inch and 1.2035 - 1.2185 inch)	
		807137	Stone - Master rod knuckle pin bore, honing (1.1535 - 1.1635 inch and 1.2035 - 1.2185 inch)	

TABLE 2-1. AGE FUNCTIONAL TOOL LIST - Continued

Group No.	Figure No.	Part No.	Nomenclature	Text
82 (Cont)		808382	Adapter - Master rod knuckle pin holes crankpin bearing bore honing fixture locating	
		808385	Locator - Master rod knuckle pin holes honing fixture	
		810130	Gage - Ring master rod knuckle pin bore checking gage master 1.150 inches	
		809833	Gage - Ring master rod knuckle pin bore checking gage master 1.153 inches	
		810132	Gage - Ring master rod knuckle pin bore checking gage master 1.1555 inches	
		809834	Gage - Ring master rod knuckle pin bore checking gage master 1.158 inches	
		810133	Gage - Ring master rod knuckle pin bore checking gage master 1.1605 inches	
		809835	Gage - Ring master rod knuckle pin bore checking gage master 1.163 inches	
		809836	Gage - Ring master rod knuckle pin bore checking gage master 1.168 inches	
		810138	Gage - Ring master rod knuckle pin bore checking gage master 1.200 inches	
		809839	Gage - Ring master rod knuckle pin bore checking gage master 1.203 inches	
		810141	Gage - Ring master rod knuckle pin bore checking gage master 1.2055 inches	
		809840	Gage - Ring master rod knuckle pin bore checking gage master 1.208 inches	
		810143	Gage - Ring master rod knuckle pin bore checking gage master 1.2105 inches	
		809841	Gage - Ring master rod knuckle pin bore checking gage master 1.213 inches	
		809842	Gage - Ring master rod knuckle pin bore checking gage master 1.218 inches	
	6-116	84246	Spacer - Master rod bearing hole honing fixture	
	6-116	83819	Fixture - Master rod bearing hole honing	
	6-116	805705	Plug - Master rod bearing hole honing fixture locating 3.384 - 3.488 inches diameter	
	6-116	803624	Body - Master rod crankshaft bearing hole finishing hone	
	6-116	800082	Holder - Master rod crankshaft bearing hole finishing hone stone	
	6-116	800081	Stone and Shell - Master rod crankshaft bearing hole finishing stone	

TABLE 2-1. AGE FUNCTIONAL TOOL LIST - Continued

Group No.	Figure No.	Part No.	Nomenclature	Text
82 (Cont)	6-116	800041	Head and Brake - Master rod crankshaft bearing hole finishing hone	
83			Master Connecting Rod Assembly	6-89
	6-15	806915	Plate - Master rod guide	
	6-7	83561	Bar A - Master rod and articulated rod piston pin bushing finished bore alignment checking 1.4995 inches diameter	
	6-7	806797	Bar B - Master rod and articulated rod piston pin bushing finished bore alignment checking 1.5005 inches diameter	
	6-7	806798	Bar C - Master rod and articulated rod piston pin bushing finished bore alignment checking 1.5015 inches diameter	
	6-7	806799	Bar D - Master rod and articulated rod piston pin bushing finished bore alignment checking 1.5025 inches diameter	
	6-7	806800	Bar E - Master rod and articulated rod piston pin bushing finished bore alignment checking 1.5035 inches diameter	
	6-7	806801	Bar F - Master rod and articulated rod piston pin bushing finished bore alignment checking 1.5045 inches diameter	
	6-7	83552	Stand - Master and articulated rod bushing and holes alignment checking bench	
84			Miscellaneous Stud	6-207 6-208
		804640	Jig - Miscellaneous stud removing drill	6-209
		801550	Drill - 1/8 inch diameter	6-210
		84277	Drill - 1/4 inch diameter	6-211
		801151	Drill - No. 19, 0.166 inch diameter	6-212
		801152	Drill - No. 3, 0.213 inch diameter	6-213
		84904	Drill - 9/32 inch diameter	6-545
		801155	Drill - Standard 5/16 inch diameter	6-546
		801157	Drill - 3/8 inch diameter	6-549
		801158	Removing Tool Stud - 1/4-20 thread standard	6-559
		801159	Removing Tool Stud - 5/16-18 and 5/16-24 thread	
		801160	Removing Tool Stud - 3/8-16 thread standard	

TABLE 2-1. AGE FUNCTIONAL TOOL LIST - Continued

Group No.	Figure No.	Part No.	Nomenclature	Text
84 (Cont)		802150	Removing Tool - 7/16 inch straight or tapered stud	
		801163	Removing Tool - Miscellaneous stud	
		801165	Removing Tool Stud - 9/16-12 thread	
		803996	Adapter - Stud damaged remover 1/4 inch	
		803997	Adapter - Stud damaged remover 5/16 inch	
		803998	Adapter - Stud damaged remover 3/8 inch	
		803999	Adapter - Stud damaged remover 7/16 inch	
		923247	Remover - Damaged stud 1/4 - 1/2 inch	
		809525	Tap A - 1/4-20 thread standard size stud special pitch diameter	
		809526	Tap B - 1/4-20 thread, 0.003 inch oversize	
		809527	Tap C - 1/4-20 thread, 0.006 inch oversize	
		809528	Tap D - 1/4-20 thread, 0.007 inch oversize	
		809529	Tap E - 1/4-20 thread, 0.009 inch oversize	
		809530	Tap F - 1/4-20 thread, 0.012 inch oversize	
		809531	Tap A - 5/16-18 thread, standard size stud special pitch diameter	
		809532	Tap B - 5/16-18 thread, 0.003 inch oversize	
		809533	Tap C - 5/16-18 thread, 0.006 inch oversize	
		809534	Tap D - 5/16-18 thread, 0.007 inch oversize	
		809535	Tap E - 5/16-18 thread, 0.009 inch oversize	
		809536	Tap F - 5/16-18 thread, 0.012 inch oversize	
		809537	Tap B - 3/8-16 thread, 0.003 inch oversize	
		809538	Tap C - 3/8-16 thread, 0.006 inch oversize	
		809539	Tap D - 3/8-16 thread, 0.007 inch oversize	
		809540	Tap E - 3/8-16 thread, 0.009 inch oversize	
		809541	Tap F - 3/8-16 thread, 0.012 inch oversize	
		809542	Tap A - 7/16-14 thread, standard size stud special pitch diameter	
		809543	Tap B - 7/16-14 thread, 0.003 inch oversize	
		809544	Tap C - 7/16-14 thread, 0.006 inch oversize	
		809545	Tap D - 7/16-14 thread, 0.007 inch oversize	
		809546	Tap E - 7/16-14 thread, 0.009 inch oversize	
		809547	Tap F - 7/16-14 thread, 0.012 inch oversize	
		809548	Tap A - 1/2-13 thread, standard size stud special pitch diameter	
		809549	Tap B - 1/2-13 thread, 0.003 inch oversize	
		809550	Tap C - 1/2-13 thread, 0.006 inch oversize	
		809551	Tap D - 1/2-13 thread, 0.007 inch oversize	
		809552	Tap E - 1/2-13 thread, 0.009 inch oversize	
		809553	Tap F - 1/2-13 thread, 0.012 inch oversize	
		809554	Tap A - 9/16-12 thread, standard size stud special pitch diameter	

TABLE 2-1. AGE FUNCTIONAL TOOL LIST - Continued

Group No.	Figure No.	Part No.	Nomenclature	Text
84 (Cont)		809555	Tap B - 9/16-12 thread, 0.003 inch oversize	
		809556	Tap C - 9/16-12 thread, 0.006 inch oversize	
		809557	Tap D - 9/16-12 thread, 0.007 inch oversize	
		809558	Tap E - 9/16-12 thread, 0.009 inch oversize	
		809559	Tap F - 9/16-12 thread, 0.012 inch oversize	
		809261	Tap - (For stud removal only) crankcase front section governor adapter pad 3/8-16 thread standard	
		805988	Driver and Remover - 1/4-28 and 5/16-24 thread stud	
		805989	Driver and Remover - 5/16-24 and 3/8-24 thread stud	
		805990	Driver and Remover - 3/16-24, 7/16-20 and 1/2-20 thread stud	
		805991	Collet and Pin - 1/4-28 thread stud driver and remover	
		805992	Collet and Pin - 5/16-24 thread stud driver and remover	
		805993	Collet and Pin - 5/16-24 thread stud driver and remover	
		805994	Collet and Pin - 3/8-24 thread stud driver and remover	
		805995	Collet and Pin - 3/8-24 thread stud driver and remover	
		805996	Collet and Pin - 7/16-20 thread stud driver and remover	
		805997	Collet and Pin - 1/2-20 thread stud driver and remover	
		923147	Driver and Remover - Stud	
		84922	Wrench - Torque 1200 inch-pounds	
		804783	Wrench - Torque 0 to 100 inch-pounds	
		805638	Adapter - 1/4 inch flat neck stud, removing and installing wrench	
		803203	Cleaning Tool - Stud thread, 3/8-24, 5/16-24 and 1/4-28 thread	
		803204	Die - Stud thread 1/4-28 thread	
		803205	Die - Stud thread 5/16-24 thread	
		803206	Die - Stud thread 3/8-24 thread	
		803519	Jig - Exhaust pipe flange to cylinder exhaust port attaching stud, removing	
		803521	Bushing A - Exhaust pipe flange to cylinder exhaust port attaching stud removing 1/8 inch drill	
		803522	Bushing B - Exhaust pipe flange to cylinder exhaust port attaching stud removing 1/4 inch drill	

TABLE 2-1. AGE FUNCTIONAL TOOL LIST - Continued

Group No.	Figure No.	Part No.	Nomenclature	Text
84 (Cont)		808863	Wrench - Open end, generator and starter attaching nut, 9/16 inch	
		808864	Wrench - Generator and starter attaching nut, 9/16 inch box end	
85			Oil Pressure Relief Valve Body	4-68 7-49
	4-47, 7-43	803372	Wrench - Oil pressure relief valve body, lug	
		810690	Wrench - Oil pressure relief valve adjusting	
86			Oil Pressure Relief Valve Nut	4-68 7-49
		801999	Wrench - Oil pressure relief valve adjusting screw nut socket 1-3/8 inch hexagon	
86A			Oil Pump Assembly (-76 Series)	
	4-47, 7-43	803372	Wrench - Oil pressure relief valve body, lug	
		801999	Wrench - Oil pressure relief valve adjusting screw nut socket 1-3/8 inch hex.	
	4-48, 7-46	82676	Wrench - Oil pump coupling	
	7-47	923087	Installing Tool A - Electrical tachometer drive shaft gear oil seals	
87			Oil Pump Complete Assembly Attaching Nut	4-54 7-64
	4-38, 7-59	804885	Wrench A - Oil pump to supercharger rear cover nut box 1/2 inch hexagon	
	4-39, 7-59	800684	Wrench B - Oil pump foot and dual accessory drive housing to supercharger rear cover	
	7-59	802526	Wrench - Torque handle 600 inch-pounds	
88			Oil Pump Drive Coupling	4-68 6-402
	4-48, 7-46	82676	Wrench - Oil pump coupling	7-49
89			Oil Pump Drive Gear Bushing	6-736 6-737
	6-229	803019	Tool Bit - Intermediate impeller drive shaft gear bushing finishing boring bar	6-738
	6-229	803018	Boring Bar - Intermediate impeller drive shaft gear bushing finishing	
	6-229	805106	Adapter - Oil pump gear shaft bushing, removing and finishing boring bar	
	6-229	805827	Collet - Magic chuck or equiv.	

TABLE 2-1. AGE FUNCTIONAL TOOL LIST - Continued

Group No.	Figure No.	Part No.	Nomenclature	Text
89 (Cont)	6-229	83921	Chuck - Number 3 Morse taper magic or equiv.	
	6-229	806349	Gage - Supercharger rear cover magneto oil pump accessory and generator drive shaft bushing holes, limit plug, cover hole 1.4465 - 1.4475 inches	
		806350	Gage - Supercharger rear cover magneto oil pump accessory and generator drive shaft bushing holes, limit plug, cover hole 1.4565 - 1.4575 inches	
	6-229	807535D2	Plug - Oil pump gear shaft bushing installing	
	6-229	807535D1	Base - Oil pump gear shaft bushing installing	
	6-229	82243	Gage - Limit plug 1.2175 - 1.2185 inches	
90			Oil Strainer	4-61 5-54
		810522	Puller - Oil strainer assembly impact removing	5-56 5-58
	5-1, 5-2	809968	Fixture - Rear oil pump strainer disassembly and assembly	
	5-1	923306	Pliers - Multi-purpose	
		923191	Pliers - Rocker scavenge pump check valve spring and body retaining rings removing and installing	
	2-8	810423	Rack - Oil strainer elements holding	
		810705	Fixture - Oil strainer disassembly and reassembly	
91			Oil Sump	6-641 6-642
		810612	Reamer - Oil sump clean-out plug hole, rework, 0.978 diameter	6-643 6-644
		810623	Fixture - Holding, oil sump thd clean-out plug hole, rework (top of sump)	
		810624	Tap - Oil sump clean-out plug bushing hole 1-1/16-12 thd, rework, special	
		810625	Gage - Threaded, oil sump clean-out plug bushing hole, rework, 1-1/16-12 thd, special	
		810626	Installer - Oil sump clean-out plug bushing, rework	
		810627	Fixture - Drill, oil sump and clean-out plug bushing stake pin hole, rework	
92			Oil Sump Scavenge Pump Shaft Gear Bushing	6-249 6-250
	6-46	804792	Plug - Oil sump scavenge pump driven coupling gear bushing removing	6-251
	6-47	804791	Fixture - Oil sump scavenge pump driven	

TABLE 2-1. AGE FUNCTIONAL TOOL LIST - Continued

Group No.	Figure No.	Part No.	Nomenclature	Text
92 (Cont)			coupling gear bushing finishing and facing lathe	
	6-47	803078	Gage - Bushing checking limit plug 0.812 - 0.813 inch diameter	
93			Oil Sump Scavenge Pump Drive Shaft	
		810539	Gage - Spline checking, oil sump scavenge pump drive shaft and gear, 0.005 inch maximum wear (0.500 pitch diameter, internal)	
		810540	Gage - Spline checking, oil sump scavenge pump drive shaft and gear and scavenge pump drive shaft, 0.005 inch maximum wear (0.500 inch pitch diameter, external)	
94			Oil Sump Scavenge Pump Driven Coupling Gear	4-37
	4-29	803310	Immobilizer - Oil sump scavenge pump drive shaft gear and pinion to cam support attaching bolt	
95			Piston	6-120 6-558
		809195	Gage - Piston pin bore flat plug 0.004 inch maximum wear 1.5035 inches diameter	6-559
		810308	Gage - Wedge type piston ring groove maximum wear snap first ring groove 0.000 - 0.007 inch clearance	
		810309	Gage - Wedge type piston ring groove maximum wear snap second ring groove 0.002 - 0.012 inch clearance	
	6-178	806264	Fixture - Wedge type piston ring groove reconditioning, lathe	
	6-178	801097	Grooving Tool - Wedge type piston ring groove angular lathe	
		803720	Gage - Wedge type piston ring groove grooving tool checking	
	6-178	806263	Fixture - Wedge type piston ring groove reconditioning lathe locating	
	6-178	805759	Pin - Piston ring groove reconditioning fixture	
	6-179	810017	Telescope Assembly - Autocollimotor piston ring groove angle checking	

TABLE 2-1. AGE FUNCTIONAL TOOL LIST - Continued

Group No.	Figure No.	Part No.	Nomenclature	Text
96			Piston Pin	4-26
	2-4	810511	Puller - Piston pin removing	
97			Piston Pin Bushing	6-94 6-99
		82043	Gage - Piston pin bushing maximum wear flat plug 1.5065 inches diameter	6-391 6-393
	6-111	83409	Base - Piston pin bushing knuckle pin bushing replacement, arbor and drill press	6-395 6-396
	6-111	801892	Collar - Piston pin bushing removing and installing and burnishing arbor press	6-397 6-398
	6-111	801926	Cutter - Piston pin bushing counterbore drill press	6-399
		801928	Pilot and Nut - Piston pin bushing counterbore cutter	
	6-111	801890	Plug - Piston pin bushing removing and installing arbor press	
		810402	Gage - Limit plug 1.6265 - 1.6275 inches	
		808801	Gage - Articulated and master rod piston pin bushing plug check 1.6295 - 1.6305 inches diameter	
		808802	Gage - Articulated and master rod piston pin bushing plug check 1.6345 - 1.6355 inches diameter	
	6-113	805831	Cap - Piston pin and knuckle pin bushings installing arbor press	
	6-113	802403	Broach - Piston pin bushing burnishing 1.4915 inches diameter	
	6-114	83413	Collar - Piston pin bushing spinning and facing drill press	
	6-114	83345	Spinning Tool - Piston pin bushing	
	6-114	83421	Pilot and Nut - Piston pin bushing and knuckle pin bushing facing cutter	
		801179	Gage - Master rod and articulated rod piston pin bushing limit plug 1.5005 - 1.5015 inches diameter	
98			Piston Ring	7-30 7-31
	7-29	809296	Fixture - Tapered piston ring side fit checking effective height of piston 2.696 inches	8-12
	7-29	809364	Comparator - Tapered piston ring side fit checking	

TABLE 2-1. AGE FUNCTIONAL TOOL LIST - Continued

Group No.	Figure No.	Part No.	Nomenclature	Text
98		807743	Installing Tool - Piston ring or equiv.	
(Cont)	8-8	803145	Clamp - Piston ring	
99			Propeller Shaft Assembly	3-6
				3-7
	3-2, 8-7	803485	Eye - Propeller shaft and engine hoist	4-3
		83922	Protector - Propeller shaft thread spline	4-21
	8-7	923055	Turning Tool - Propeller shaft	4-26
		80292	Handle Bar	4-46
		803530	Adapter - Propeller shaft holding fixture	4-47
	4-33, 7-4	803529	Fixture - Propeller shaft holding bench	7-9
	4-33, 7-4	83308	Locking Tool - Reduction drive gear pinion	7-10
				7-15
				8-10
				8-12
				8-21
				8-29
				12-4
100			Propeller Shaft Bushing	6-261
				6-262
	6-51, 6-56	804277	Plate and Bushing - Propeller shaft bushing replacement fixture locating	6-264
				6-266
	6-51, 6-56	84618	Adapter - Propeller shaft bushing replacement fixture	6-269
				6-270
	6-51, 6-58	84619	Bushing - Propeller shaft bushing removing and boring bar, pilot	6-272
				6-274
	6-51, 6-56	84617	Fixture - Propeller shaft bushing replacement	6-276
				6-277
	6-51, 6-57	802052	Boring Bar - Propeller shaft front and rear bushing removing and finish boring	6-278
				6-279
	6-51, 6-58	802358	Tool Bit - Propeller shaft front and rear bushing removing	
	6-51, 6-58	84626	Bushing - Propeller shaft bushing replacement slip	
		802359	Tool Bit - Propeller shaft reduction gear pinion bushing removing and finish boring	
		802059	Boring Bar - Propeller shaft reduction gear pinion bushing removing and finish boring	
	6-52	83995	Bushing - Propeller shaft bushing removing steady rest	
	6-53, 6-59	84308	Plug - Propeller shaft front bushing installing	
	6-53, 6-59	84309	Base - Propeller shaft front bushing installing	

TABLE 2-1. AGE FUNCTIONAL TOOL LIST - Continued

Group No.	Figure No.	Part No.	Nomenclature	Text
100 (Cont)	6-54, 6-60	803168	Plug - Propeller shaft rear bushing installing	
	6-54	801914	Plug and Base - Propeller shaft reduction gear pinion bushing installing	
		801918	Reamer A - Propeller shaft rear bushing lock pin hole 0.249 inch diameter	
		808424	Reamer B - Propeller shaft rear bushing lock pin hole 0.259 inch diameter	
		808425	Reamer C - Propeller shaft rear bushing lock pin hole 0.264 inch diameter	
		801917	Reamer D - Propeller shaft reduction gear pinion bushing pin hole 0.218 inch diameter	
		808421	Reamer E - Reduction gear drive pinion bushing lock pin hole 0.228 inch diameter	
		808422	Reamer F - Reduction gear drive pinion bushing lock pin hole 0.233 inch diameter	
	6-58, 6-61	802330	Tool Bit - Propeller shaft front bushing removing and finish boring bar	
		805104	Gage - Propeller shaft reduction gear pinion bushing limit plug 1.3975 - 1.3965 inches diameter	
	6-57, 6-61	800187	Tool Bit - Propeller shaft rear bushing angle relief cutting	
		802380	Block - Propeller shaft rear bushing angle relief cutter grinding 0 degree 0.22 minute - 0 degree 14 minutes	
	6-58	84627	Bushing - Propeller shaft bushings replacement	
	6-58	84628	Plate - Propeller shaft bushing replacement clamping	
	6-60	803375	Jig - Propeller shaft rear bushing pin hole drill and reamer	
	6-60	800154	Reamer - Propeller shaft rear bushing pin hole	
	6-60	800194	Gage - Propeller shaft rear bushing pin hole limit plug 0.186 - 0.187 inch diameter	
	6-60	803376	Driver - Propeller shaft rear bushing lock pin installing	
101			Propeller Shaft Hydro Oil Connection Adapter	4-4
	2-3	806735	Puller - Propeller shaft hydro oil connection adapter	

TABLE 2-1. AGE FUNCTIONAL TOOL LIST - Continued

Group No.	Figure No.	Part No.	Nomenclature	Text
102			Propeller Shaft Hydro Oil Connection Adapter and Cover Assembly	4-4
		923225	Puller - Propeller shaft oil cover impact removing	
103			Propeller Shaft Hydro Oil Connection Substituting Cover Nut	4-4 8-33
	4-2	804671	Wrench - Propeller shaft hydro oil connection cover nut 2.025 inches hexagon socket	
104			Propeller Shaft Thrust Bearing Nut	4-3
	2-1, 4-1	806958	Housing - Propeller shaft thrust bearing nut hydraulic torque wrench	
		806970	Adapter A - Propeller shaft thrust bearing nut hydraulic torque wrench	
		806969	Adapter B - Propeller shaft thrust bearing nut hydraulic torque wrench No. 50 spline	
		806960	Jack and Gage - Propeller shaft thrust bearing nut hydraulic torque wrench	
	2-2	82889	Wrench - Propeller shaft thrust ball bearing nut, lug	
105			Propeller Shaft Thrust Bearing Retainer	6-231 6-232
		802622	Nozzle - Cylinder head heating air and gas hose attachment or equiv.	6-233 6-234
		802621	Gage - Cylinder head heating temperature or equiv.	6-235
	6-34	806544	Removing Tool - Propeller shaft thrust bearing retainer	
	6-34	806541	Jig - Propeller shaft thrust bearing retainer dowel pin hole drill	
	6-35	806545	Fixture - Propeller shaft thrust bearing retainer bore and face grinding and crankcase front section boring	
106			Propeller Shaft Thrust Bearing Spacer	4-46 4-47
	6-49	803793	Plug - Propeller shaft thrust bearing spacer removing hydraulic jack and pump adapter	

TABLE 2-1. AGE FUNCTIONAL TOOL LIST - Continued

Group No.	Figure No.	Part No.	Nomenclature	Text
106 (Cont)	4-33	810280	Puller - Propeller shaft thrust bearing spacer removing hydraulic	
	4-33	810513	Jack - Multi-purpose hydraulic 10 ton or equiv.	
	4-33	803743	Hose - Multi-purpose hydraulic jack and pump or equiv.	
	4-33	803746	Pump - Multi-purpose hydraulic jack hand	
107			Push Rod Housing Adapter Nut	4-22 4-28
		84770	Remover - General purpose magnetic	
108			Push Rod Housing Connection	6-441 8-7
		805786	Fixture - Cylinder reconditioning drill press	8-16
	6-132	805596	Jig - Push rod housing hose connection drill	
	6-132	806422	Drill - Upper push rod housing connection removing 5/16 inch diameter	
	6-132	806419	Driver - Upper push rod housing connection installing	
	6-132	806420	Nut - Upper push rod housing connection installing driver clamping	
		84922	Wrench - Torque 1200 inch-pounds	
		803162	Extension - Torque Wrench 2 x 1200 pounds	
		806644	Wrench - Valve tappet guide attaching nut 7/16 inch hexagon	
		808863	Wrench - Open end, generator and starter attaching nut, 9/16 inch	
		808864	Wrench - Generator and starter attaching nut, 9/16 inch box end	
109			Push Rod Housing Connection Nut Lower	4-22 8-16
	4-10	805965	Wrench - Lower push rod housing connection nut	8-17
110			Push Rod Housing Connection Nut Upper	4-22 8-16
	8-14	808140	Wrench - Upper push rod housing connection nut	8-17
	8-14	802526	Wrench - Torque handle 600 inch-pounds	

TABLE 2-1. AGE FUNCTIONAL TOOL LIST - Continued

Group No.	Figure No.	Part No.	Nomenclature	Text
111			Push Rod Housing Packing Washer	8-16
	8-12	807210D1	Pilot - Push rod lower packing ring and washer	
	8-12	807210D2	Sleeve - Push rod lower packing ring and washer	
112			Reduction Driving Gear	4-28 8-7
		923552	Adapter - Reduction driving gear hydraulic puller (R1820-80 Series)	
	4-17	806381	Adapter - Multi-purpose hydraulic puller	
	4-17	806354	Plate - Multi-purpose puller 20 ton hydraulic jack	
	4-17	803745	Jack - Multi-purpose hydraulic 20 ton or equiv.	
		806358	Plug - Multi-purpose hydraulic puller	
	4-17	803743	Hose - Multi-purpose hydraulic jack and pump or equiv.	
	4-17	803746	Pump - Multi-purpose hydraulic jack, hand	
	8-4	809319	Heater - Reduction drive gear installing induction 440 volts	
	2-13	810305	Wrench - Reduction driving gear nut	
113			Reduction Driving Gear Nut	4-28 8-8
	4-16	82670	Wrench - Reduction drive gear nut box 3-5/8 inch octagon	
		808631	Wrench - Reduction driving gear nut geared ratio 4 to 1 (R1820-76 Series, -86A and -86B)	
		808628	Wrench - Reduction driving gear nut geared ratio 9 to 1 (R1820-80 Series)	
114			Reduction Driving Gear Pinion	6-229 6-301
	4-33, 7-4	800562	Wrench - Reduction drive gear pinion lock nut plug 9/16 inch hexagon plug x 1/2 inch socket	7-9
	6-68	810425	Gage - Limit plug 0.876 - 0.8765 inch diameter	
		810426	Gage - Limit plug 0.878 - 0.8785 inch diameter	
		808057	Gage - Reduction gear pinion hole limit plug 0.8800 - 0.8805 inch diameter	

TABLE 2-1. AGE FUNCTIONAL TOOL LIST - Continued

Group No.	Figure No.	Part No.	Nomenclature	Text
114 (Cont)		808058	Gage - Reduction gear pinion hole limit plug 0.8850 - 0.8855 inch diameter	
		808059	Gage - Reduction gear pinion hole limit plug 0.8900 - 0.8905 inch diameter	
	6-69	808050	Fixture - Reduction gear pinion carrier trunnion grinding	
	6-69	808051	Adapter - Reduction gear pinion carrier trunnion grinding fixture	
115			Reduction Driving Gear Spacer Oil Seal Ring	4-20 7-26
	7-26	807064	Holding Tool - Crankshaft oil seal spacer and ring assembly	7-50
	7-26	84536	Installing Tool - Crankshaft oil seal spacer ring	
116			Rocker Arm Assembly	4-21 7-64
		810296	Wrench - Valve clearance adjusting screw lock screw 3/8 inch hexagon	8-21
		810557	Wrench - Valve clearance adjusting screw lock screw 7/16 inch hexagon	
	4-9	923067	Puller - Crankcase main section bolt and rocker arm hub bolt impact removing	
	8-18	923198	Feeler Gage Assembly - 0.010 - 0.020 and 0.079 inch	
	8-20	802526	Wrench - Torque handle 600 inch-pounds	
	8-20	923231	Screw Driver - Rocker arm adjusting screw tightness checking, 0.109 inch blade thickness	
117			Rocker Arm Bearing	4-52 4-53
	4-37	805734	Adapter - Rocker arm bearing removing and installing plug and collar	7-28 7-50
	7-28	805746	Plug and Collar - Rocker arm bearing removing and installing	
118			Rocker Arm Hub Bolt Bushing	6-128 6-510
		806833	Gage - Rocker box bolt bushing hole maximum wear flat plug, 0.5673 inch diameter	6-511 6-512
	6-159	800099	Puller - Rocker box bolt bushing removing and installing (R1820-76 Series	6-515 6-516 6-517

TABLE 2-1. AGE FUNCTIONAL TOOL LIST - Continued

Group No.	Figure No.	Part No.	Nomenclature	Text
118 (Cont)		81403	Handle - Wrench 7/16 inch diameter	6-518
		807488	Puller - Rocker box bolt bushing removing and installing (R1820-80 Series, -86A and -86B)	
	6-160	923242	Reamer A - Rocker hub bolt bushing cylinder hole hand line 0.6923 inch diameter	
		923243	Reamer B - Rocker hub bolt bushing cylinder hole hand line 0.6973 inch diameter	
		923244	Reamer C - Rocker hub bolt bushing cylinder hole hand line 0.7073 inch diameter	
		923245	Reamer D - Rocker hub bolt bushing cylinder hole hand line 0.7173 inch diameter	
	6-160	82765	Gage A - Intake valve guide cylinder hole limit plug 0.6915 - 0.6925 inch diameter	
		80433	Gage B - Intake valve guide cylinder hole limit plug 0.6965 - 0.6975 inch diameter	
		80851	Gage C - Intake valve guide cylinder hole limit plug 0.7065 - 0.7075 inch diameter	
		81479	Gage D - Intake valve guide cylinder hole limit plug 0.7165 - 0.7175 inch diameter	
		923239	Reamer E - Rocker box bolt bushing hand line 0.5653 inch diameter	
		800111	Gage - Rocker box bolt bushing limit plug, 0.5635 - 0.5655 inch	
	6-163	800106	Cutter and Bar - Rocker box bolt bushing shoulder facing hand	
	6-163	800101	Nut - Rocker box bolt bushing shoulder facing cutter and bar	
	6-163	800104	Plug A - Rocker box bolt bushing shoulder facing locating exhaust and intake	
		803822	Plug B - Rocker box bolt bushing shoulder facing locating exhaust	
	6-163	800100	Plate - Rocker box bolt bushing shoulder facing locating	
	6-163	805828	Gage E - Rocker hub bolt bushing shoulder face width	
	6-164	805708	Cutter A - Rocker hub bolt bushing counterbore 0.696 inch diameter	
	6-164	805707	Pilot and Nut - Rocker hub bolt bushing counterbore cutter 0.5633 inch diameter	
	6-164	805709	Holder - Rocker hub bolt bushing counterbore	

TABLE 2-1. AGE FUNCTIONAL TOOL LIST - Continued

Group No.	Figure No.	Part No.	Nomenclature	Text
118 (Cont)	6-164	810556	Gage F - Rocker hub bolt bushing counterbore depth flush pin 0.089 - 0.093 inch diameter	
	6-164	805711	Collar - Rocker hub bolt bushing counterbore cutter stop	
	6-164	805821	Cutter B - Rocker hub bolt bushing counterbore spherical radius	
119			Rocker Arm Bushing	6-522 6-523 6-524 6-525 6-526 6-527
	6-166	807826	Fixture - Rocker arm bushing hole boring lathe	
	6-166	807827	Plug - Rocker arm bushing hole boring aligning	
	6-166	807828	Plug and Collar - Rocker arm bushing installing	
	6-166	807830	Collar - Rocker arm bushing supporting	
	6-166	807829	Broach - Rocker arm bushing	
	6-166	807831	Gage - Rocker arm bushing hole limit plug, 0.769 - 0.772 inch diameter	
	6-166	805894	Chuck - No. O Magic, No. 2 Morse Taper (Scully-Jones and Co., or equivalent)	
	6-166	807833	Spinning Tool - Rocker arm bushing	
	6-166	807832	Bushing - Rocker arm bushing fixture	
	6-166	805730	Cutter - Exhaust guide facing 1-1/2 inch diameter or equiv.	
	6-166	807835	Pilot - Rocker arm bushing facing cutter 15/32 inch diameter x 5/16 inch shank or equiv.	
	6-166	807834	Fixture - Rocker arm bushing facing	
	6-166	807836	Plug - Rocker arm bushing hole boring aligning	
	6-166	807837	Gage - Rocker arm hole limit plug 0.7805 - 0.7815 inch dia.	
120			Rocker Arm Plain Bushing	6-508
	6-158	810553	Fixture - Boring, intake and exhaust valve rocker arm lathe	
	6-158	810553D11	Bushing - Intake and exhaust valve rocker arm lathe, fixture, boring	
	6-158	810553D15	Alignment Plug - Intake and exhaust valve rocker arm lathe, fixture, boring	
		808131	Gage - Limit plug, 1.2495 - 1.2505 inch dia.	

TABLE 2-1. AGE FUNCTIONAL TOOL LIST - Continued

Group No.	Figure No.	Part No.	Nomenclature	Text
121			Rocker Arm Roller Pin	6-529 6-530
	6-167	806624	Jig - Rocker arm roller pin removing drill	
		806626	Drill - Rocker arm roller pin removing 7/32 inch diameter	
		806625	Gage - Rocker arm roller pin hole maximum elongation 0.260 inch diameter	
	6-168	806623	Fixture - Rocker arm roller pin peening hydraulic press	
122			Rocker Box Cover Attaching Nut	4-20 8-23
		804948	Wrench - Nut removing pneumatic magazine speed socket 7/16 inch hexagon	
	4-8	84770	Remover - General purpose magnetic	
		804409	Wrench - Rocker box cover nut socket 7/16 inch hexagon	
123			Spark Plug and Spark Plug Inserts	6-428A 6-429 6-430 6-431 6-432 6-433 6-434 6-435 6-436 6-498 6-500
		808580	Plug - Exhaust valve seat pressure test dummy spark or equiv.	
		805786	Fixture - Cylinder reconditioning drill press	
	6-130	810163	Gage - Leveling spark plug insert drill press	
	6-130	805715	Pilot A - Spark plug insert removing counterbore cutter 0.633 inch diameter	
	6-130	805714	Cutter A - Spark plug insert removing counterbore 29/32 inch diameter	
		810166	Reamer A - Spark plug insert cylinder hole 0.9320 inch diameter, 0.015 inch oversize	
		810167	Reamer B - Spark plug insert cylinder hole 0.9470 inch diameter, 0.030 inch oversize	
		810168	Reamer C - Spark plug insert cylinder hole 0.9570 inch diameter, 0.040 inch oversize	
		810169	Reamer D - Spark plug insert cylinder hole 0.9670 inch diameter, 0.050 inch oversize	
	6-130	810080	Tap A - Spark plug insert cylinder hole 1-14 thread, 0.015 inch oversize	
		810081	Tap B - Spark plug insert cylinder hole 1-14 thread, 0.030 inch oversize	
		810082	Tap C - Spark plug insert cylinder hole 1-14 thread, 0.040 inch oversize	

TABLE 2-1. AGE FUNCTIONAL TOOL LIST - Continued

Group No.	Figure No.	Part No.	Nomenclature	Text
123 (Cont)		810164	Tap D - Spark plug insert cylinder hole 1-14 thread, 0.050 inch oversize (1.0046 pitch diameter special)	
		810083	Gage B - Thread plug spark plug insert cylinder hole 1-14 thread, 0.015 inch oversize	
		810084	Gage C - Thread plug spark plug insert cylinder hole 1-14 thread, 0.030 inch oversize	
		810085	Gage D - Thread plug spark plug insert cylinder hole 1-14 thread, 0.040 inch oversize	
		810165	Gage E - Thread plug spark plug insert cylinder hole 1-14 thread, 0.050 inch oversize (1.0041 - 1.0046 pitch diameter special)	
	6-130	805722	Bushing - Spark plug insert cylinder hole countersink cutter 1-14 thread, 0.030 inch oversize pilot	
		805723	Bushing - Spark plug insert cylinder hole countersink cutter 1-14 thread, 0.030 inch oversize pilot	
		810170	Bushing - Pilot spark plug insert cylinder hole countersink cutter 1-14 thread, 0.050 inch oversize	
	6-130	805906	Wrench B - Spark plug insert cylinder hole pilot bushing	
	6-130	805726	Pilot and Nut - Spark plug insert facing and countersinking cutters	
	6-130	806861	Cutter B - Spark plug insert cylinder hole chamfering 1-3/8 inches diameter x 90 degrees	
	6-130	803676	Holder - Spark plug insert counterbore cutter drill press	
	6-130	803543	Gage F - Spark plug insert hole cylinder head thickness checking flush pin	
	6-130	803675	Installing Tool - Spark plug insert	
		806594	Torque Wrench - 0 to 2400 inch-pounds	
	6-130	808670	Pilot and Bushing - Spark plug insert spot-facing countersink cutter drill press	
	6-130	808671	Cutter C - Spark plug insert back spot-facing countersink 3/8 inch radius	
	6-130	81323	Gage - Intake valve guide cylinder hole limit plug 0.7065 - 0.7075 inch	
	6-130	801950	Drill - Spark plug insert dowel hole 0.120 inch diameter	
	6-130	805718	Cutter D - Spark plug insert facing and countersinking	

TABLE 2-1. AGE FUNCTIONAL TOOL LIST - Continued

Group No.	Figure No.	Part No.	Nomenclature	Text
123 (Cont)	6-130	805719	Pilot B - Spark plug insert and countersinking cutter	
	6-130	805905	Gage G - Spark plug insert facing and countersinking depth setting ring	
	6-130	805720	Bushing E - Spark plug insert facing and countersinking cutter 18mm - 1.5mm pitch pilot	
		803544	Gage H - Spark plug insert length checking flush pin	
	6-130	805725	Tap - Spark plug insert spark plug hole thread plug 18mm - 1.5mm pitch	
		802690	Gage - Spark plug insert spark plug hole thread plug 18mm x 1.5mm	
	6-130	810086	Gage I - Squareness spark plug insert flange face to thread pitch diameter, 0.005 inch full indicator reading	
		810682	Thread Chaser	
124			Spark Plug Leads	4-14 8-24
	4-6	808858	Wrench - Crowfoot ignition wire spark plug terminal 7/8 inch double hexagon	
		800630	Wrench - Crowfoot ignition wire spark plug terminal 3/4 inch hexagon	
125			Stationary Reduction Gear	6-283 6-289 6-291 6-295 7-14
		800695	Stud - Stationary reduction gear support to crankcase front section aligning	
	6-64	800040	Head and Brake - Stationary reduction gear and support sleeve honing	
	6-64	803548	Body - Torque arm support and stationary reduction gear support sleeves replacement hone	
	6-64	800045	Holder - Stationary reduction gear and support sleeve honing stone	
	6-64	800047	Stone and Shell Hone	
	6-65	800253	Adapter - Stationary reduction gear support sleeve honing fixture	
		809917	Plug and Base - Removing stationary reduction gear support sleeve	
	6-67	809918	Plug and Base - Installing stationary reduction gear support sleeve	

TABLE 2-1. AGE FUNCTIONAL TOOL LIST - Continued

Group No.	Figure No.	Part No.	Nomenclature	Text
126			Supercharger Clutch Oil Control Valve Sleeve	4-56
	4-40	923062	Puller - Supercharger roller clutch oil control valve sleeve removing	
127			Supercharger Drain Valve Return Tube Assembly	4-58 6-764 7-62
		808869	Adapter - Supercharger rear housing drain valve return tube assembly impact puller (used when tube is seized in supercharger rear housing)	
	4-41	806634	Puller - Multi-purpose removing impact 3/8-24 thread	
		800523	Holder - Supercharger drain valve body disassembly and assembly vise	
	4-41	806682	Adapter - Supercharger combination drain valve return tube assembly impact removing puller	
	7-58	801763	Installing Tool - Supercharger drain valve lock ring	
128			Supercharger Drain Valve Return Tube Extension Tube	6-627 6-628 6-629 6-630
	6-199	806765	Bushing - Supercharger rear housing drain valve extension tube removing drill	
	6-199	800067	Drill - Supercharger rear housing drain valve extension tube removing 0.250 inch diameter	
		800068	Tap - Supercharger rear housing drain valve extension tube 7mm x 1mm pitch	
	6-199	800065	Fixture - Supercharger rear housing drain valve extension tube spinning and facing	
	6-199	806766	Bushing and Collar - Supercharger rear housing drain valve extension tube spinning tool	
	6-199	800069	Spinning Tool - Supercharger rear housing drain valve extension tube roughing	
		800070	Spinning Tool - Supercharger rear housing drain valve extension tube finishing	
	6-199	806767	Bushing and Collar - Supercharger rear housing drain valve extension tube drill	
	6-199	800071	Drill - Supercharger rear housing drain valve extension tube facing 19/64 inch diameter	

TABLE 2-1. AGE FUNCTIONAL TOOL LIST - Continued

Group No.	Figure No.	Part No.	Nomenclature	Text
129			Supercharger Front Housing Studding Assembly	4-13 4-25 7-69 7-70
		803830	Cover - Intake pipe packing nut	
	4-37	800878	Remover and Installer - Supercharger front housing core plug	
		807049	Cover - Supercharger front section sump pad protecting	
		807050	Cover - Supercharger front oil drain passage protecting	
		810457	Fixture - Air test front supercharger housing impeller shaft bearing support attaching screw holes	
	7-62	810209	Compressor - Impeller shaft bearing support to supercharger front housing attaching screws	
130			Supercharger Impeller Machining and Balancing Assembly	4-66 7-36 7-37 7-39
	2-7	805124	Locking Tool - Impeller shaft 26 teeth	
	4-45	805466	Spacer - Impeller shaft removing	
	4-46	803424	Adapter A - Impeller shaft removing puller	
	4-46	806902	Adapter B - Impeller shaft assembly removing, 20 ton hydraulic puller bolt	
	4-46	84989	Adapter C - Impeller shaft removing puller	
	4-46	805284	Puller - Impeller shaft assembly removing, 20 ton hydraulic	
	4-46	803745	Jack - Multi-purpose hydraulic 20 ton or equiv.	
	4-46	803746	Pump - Multi-purpose hydraulic jack hand	
	4-46	803743	Hose - Multi-purpose hydraulic jack and pump or equiv.	
	7-33	805787	Arbor B - Impeller side clearance checking	
131			Supercharger Rear Cover	4-11 4-63 7-45 7-51 7-55 7-56 8-26
	4-4	802836	Eye - Supercharger rear housing and cover hoist	
	4-44	804178	Puller - Crankcase section removing 5/16-18 thread	
		801793	Stand - Supercharger rear cover and housing disassembling, assembling and studding bench	
	7-51	82809	Turning Tool - Accessory drive, 17 teeth	
		810295	Gage - Clearance, supercharger rear housing cover oil strainer cavity to oil strainer (with cover and housing assembled)	

TABLE 2-1. AGE FUNCTIONAL TOOL LIST - Continued

Group No.	Figure No.	Part No.	Nomenclature	Text
132			Supercharger Rear Cover Fuel Pump Drive Gear Bushing	
		807141	Gage - Supercharger rear cover fuel pump drive gear bushing, limit plug, 1.2185 - 1.2195 inches	
		807142	Gage - Supercharger rear cover fuel pump drive gear bushing hole, limit plug cover hole, 1.445 - 1.446 inches	
		807143	Gage - Supercharger rear cover fuel pump drive gear bushing hole limit plug, cover hole 1.455 - 1.456 inches	
133			Supercharger Rear Cover Attaching Nut	4-63 7-55
	4-44	808455	Wrench - Supercharger rear cover to rear housing double hexagon nut	7-56
		802680	Wrench - Nut removing pneumatic magazine speed socket 1/2 inch hexagon	
		802682	Wrench - Nut removing pneumatic magazine speed socket 9/16 inch hexagon	
133A			Supercharger Rear Cover Installation	7-55 7-56
	7-51	82809	Turning Tool - Accessory drive, 17 teeth	
	7-52	84761	Adapter - Intermediate impeller drive end play checking indicator	
	7-53	803328	Installing Tool - Magneto and generator drive shaft oil seal	
		810295	Gage - Clearance, supercharger rear housing cover oil strainer cavity to oil strainer (with cover and housing assembled)	
134			Supercharger Rear Housing Machining and Studding Assembly	4-11 4-66 6-633
	4-4	801793	Stand - Supercharger rear cover and housing disassembling, assembling and studding bench	6-634 6-635 6-637
	6-200	810427	Bushing - Drill supercharger rear housing oil seal vent tubes	7-39 7-52
	6-200, 6-203	810428	Bushing - Pilot supercharger rear housing oil seal vent tube hole reaming	7-53
	6-200	810429	Reamer - Supercharger rear housing oil seal vent tube hole 0.3031 - 0.3033 inch diameter	
		810430	Reamer - Supercharger rear housing oil seal vent tube hole 0.3051 - 0.3053 inch diameter	

TABLE 2-1. AGE FUNCTIONAL TOOL LIST - Continued

Group No.	Figure No.	Part No.	Nomenclature	Text
134 (Cont)		810431	Reamer - Supercharger rear housing oil seal vent tube hole 0.3071 - 0.3073 inch diameter	
		810432	Reamer - Supercharger rear housing oil seal vent tube hole 0.3091 - 0.3093 inch diameter	
		810433	Reamer - Supercharger rear housing oil seal vent tube hole 0.3111 - 0.3113 inch diameter	
		810434	Reamer - Supercharger rear housing oil seal vent tube hole 0.3131 - 0.3133 inch diameter	
		810435	Reamer - Supercharger rear housing oil seal vent tube hole 0.3151 - 0.3153 inch diameter	
	6-201	810436	Bushing - Pilot supercharger rear housing oil seal vent tube thread cleaning	
	6-201	810437	Tap - Cleaning supercharger rear oil seal vent tube hole 9mm - 1.25mm	
	6-203	810438	Punch - Installing supercharger rear oil seal vent tube	
	6-204	810439	Expander - Supercharger rear housing oil seal vent tube 0.238 inch diameter	
		810440	Expander - Supercharger rear housing oil seal vent tube 0.256 inch diameter	
		810441	Expander - Supercharger rear housing oil seal vent tube 0.215 - 0.222 inch diameter	
135			Supercharger Rear Housing Sleeve	6-584 6-586 6-587 6-588 6-594
	6-187	800758	Collar - Supercharger front and rear housing impeller shaft sleeve removing and installing arbor press	
	6-187	804366	Plug - Supercharger rear housing impeller shaft sleeve removing and installing arbor press	
	6-187	801206	Plug - Supercharger rear housing to impeller shaft sleeve screw hole aligning	
	6-187	807587	Bar - Rear supercharger housing to rear supercharger housing sleeve shoulder face gage	
	6-187	801205	Gage - Supercharger rear housing to supercharger rear housing sleeve shoulder face flush pin 2.591 - 2.595 inches	
	6-188	804365	Polishing Tool - Supercharger rear impeller shaft sleeve face lathe	
		810455	Fixture - Air test rear supercharger housing sleeve attaching screw holes	

TABLE 2-1. AGE FUNCTIONAL TOOL LIST - Continued

Group No.	Figure No.	Part No.	Nomenclature	Text
136			Supercharger Rear Housing to Carburetor Adapter Attaching Stud	6-61 6-61 6-62 6-62
		801243	Bushing - Carburetor adapter to supercharger rear housing attaching stud removing drill	
		801550	Drill - 1/8 inch diameter	
		803523	Bushing - Carburetor adapter to supercharger rear housing attaching stud removing 1/4 inch drill	
		84277	Drill - 1/4 inch diameter	
		803524	Bushing - Carburetor adapter to supercharger rear housing attaching stud removing 9/32 inch drill	
		84904	Drill - 9/32 inch diameter	
		802150	Removing Tool - 7/16 inch straight or tapered stud	
		803998	Adapter - Stud damaged remover 3/8 inch	
		923247	Remover - Damaged stud 1/4 - 1/2 inch	
		809542	Tap - 7/16-14 thread standard size stud special pitch diameter	
		809543	Tap - 7/16-14 thread, 0.003 inch oversize	
		809545	Tap - 7/16-14 thread, 0.007 inch oversize	
		809547	Tap - 7/16-14 thread, 0.012 inch oversize	
		803526	Bushing - Carburetor adapter to supercharger rear housing attaching stud installing 7/16-14 thread tap	
		805989	Driver and Remover - 5/16-24 and 3/8-24 thread stud	
		805994	Collet and Pin - 3/8-24 thread stud driver and remover	
		805990	Driver and Remover - 3/16-24, 7/16-20 and 1/2-20 thread stud	
		805995	Collet and Pin - 3/8-24 thread stud driver and remover	
		84922	Wrench - Torque 1200 inch-pounds	
		808863	Wrench - Open end, generator and starter attaching nut, 9/16 inch	
		808864	Wrench - Generator and starter attaching nut, 9/16 inch box end	

TABLE 2-1. AGE FUNCTIONAL TOOL LIST - Continued

Group No.	Figure No.	Part No.	Nomenclature	Text
137			Tachometer Drive Shaft and Tachometer Drive Shaft Gear Small Bushing	6-760 6-763 6-764
		800373	Tap - Tachometer drive shaft gear small bushing removing puller thread 0.375 inch national pipe thread	
	6-239	923275	Puller - Tachometer drive shaft gear small bushings removing	
	6-239	923276	Plug - Tachometer drive shaft gear small bushings installing	
	6-239	923277	Broach - Tachometer drive gear small bushings bore rough burnishing 0.625 inch diameter	
		923278	Broach - Tachometer drive shaft gear small bushings bore finish burnishing 0.6255 inch diameter	
		803242	Gage - Tachometer drive shaft gear bushing limit 0.624 - 0.625 inch	
138			Tachometer Drive Shaft Gear Housing and Cover Assembly	6-762
	6-239	808410	Tachometer - Drive shaft gear small bushing holes in housing and cover reaming	
		808406	Reamer - Tachometer drive shaft gear small bushing holes in housing and cover 0.7553 inch diameter	
		808407	Reamer - Tachometer drive shaft gear small bushing holes in housing and cover 0.7603 inch diameter	
		808408	Reamer - Tachometer drive shaft gear small bushing holes in housing and cover 0.7653 inch diameter	
		808409	Reamer - Tachometer drive shaft gear small bushing holes in housing and cover 0.7703 inch diameter	
	6-239	808401	Gage - Tachometer drive shaft gear small bushing holes in housing and cover hole limit indicator	
		808402	Gage - Tachometer drive shaft gear small bushing holes in housing and cover indicator gage setting 0.7545 inch master ring to check 0.7545 - 0.7555 inch diameter hole	
		808403	Gage - Tachometer drive shaft gear small bushing holes in housing and cover indicator	

TABLE 2-1. AGE FUNCTIONAL TOOL LIST - Continued

Group No.	Figure No.	Part No.	Nomenclature	Text
138 (Cont)			gage setting 0.7595 inch master ring to check 0.7595 - 0.7605 inch diameter hole	
		808404	Gage - Tachometer drive shaft gear small bushing holes in housing and cover indicator gage setting 0.7645 inch master ring to check 0.7645 - 0.7655 inch diameter hole	
		808405	Gage - Tachometer drive shaft gear small bushing holes in housing and cover indicator gage setting 0.7695 inch master ring to check 0.7695 - 0.7705 inch diameter hole	
139			Thermocouple Adapter	4-50 6-438
	4-36	807779	Wrench - Cylinder head thermocouple adapter lug	6-439 7-27
140			Valve Spring	4-50 7-27
		801812	Stand - Valve removing and installing bench	
		923112	Stand - Cylinder reconditioning floor	
		808257	Loosening Tool - Valve spring upper washer lock (split) impact 2-9/32 inch ID	
	2-6	810298	Compressor - Valve spring	
141			Valve Tappet Guide	4-24 7-34
		804849	Clip - Valve tappet to valve tappet guide holding	
	4-11	805947	Puller - Valve tappet guide impact	
		923484	Puller - Valve tappet guide, impact removing	
142			Valve Tappet Roller	6-561 6-562
		808761	Arbor - Valve tappet roller outside diameter grinding, standard inside diameter	
		810311	Arbor - Valve tappet roller outside diameter grinding, 0.002 inch oversize inside diameter	
		810312	Arbor - Valve tappet roller outside diameter grinding, 0.004 inch oversize inside diameter	
		810313	Arbor - Valve tappet roller outside diameter grinding, 0.006 inch oversize inside diameter	
		808763	Chart - Valve tappet roller comparator, 3.750 - 4.250 inches radius	

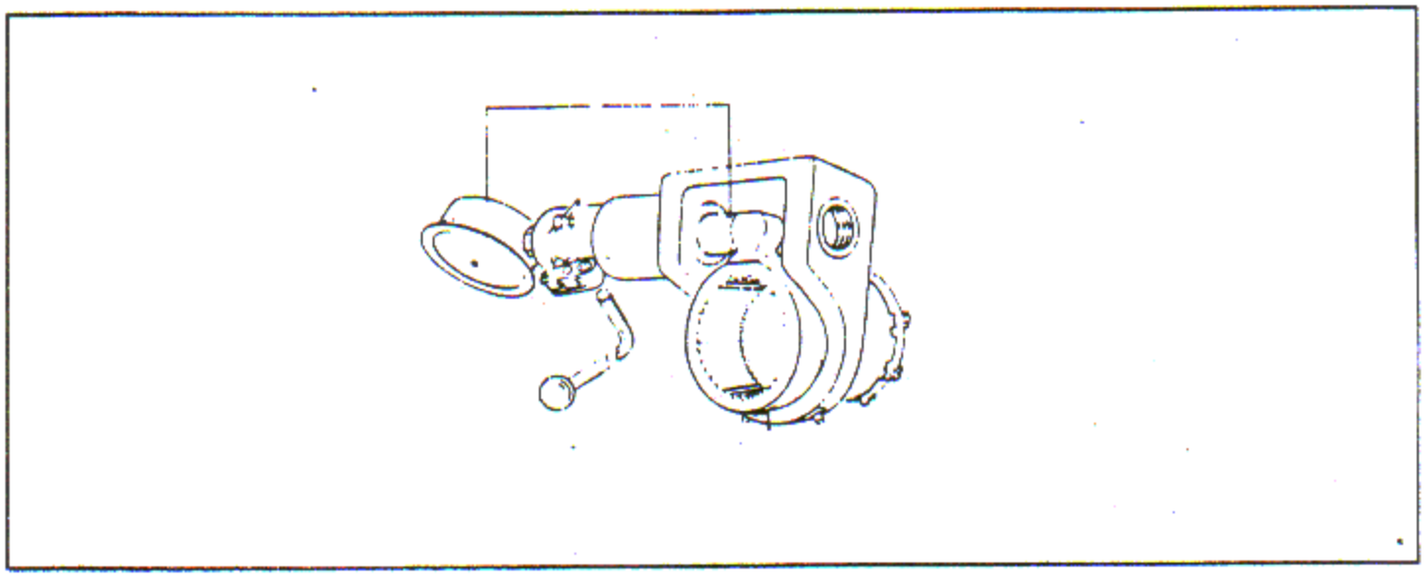

Figure 2-1. Thrust Bearing Nut Hydraulic Torque Wrench Assembly (Group 104)

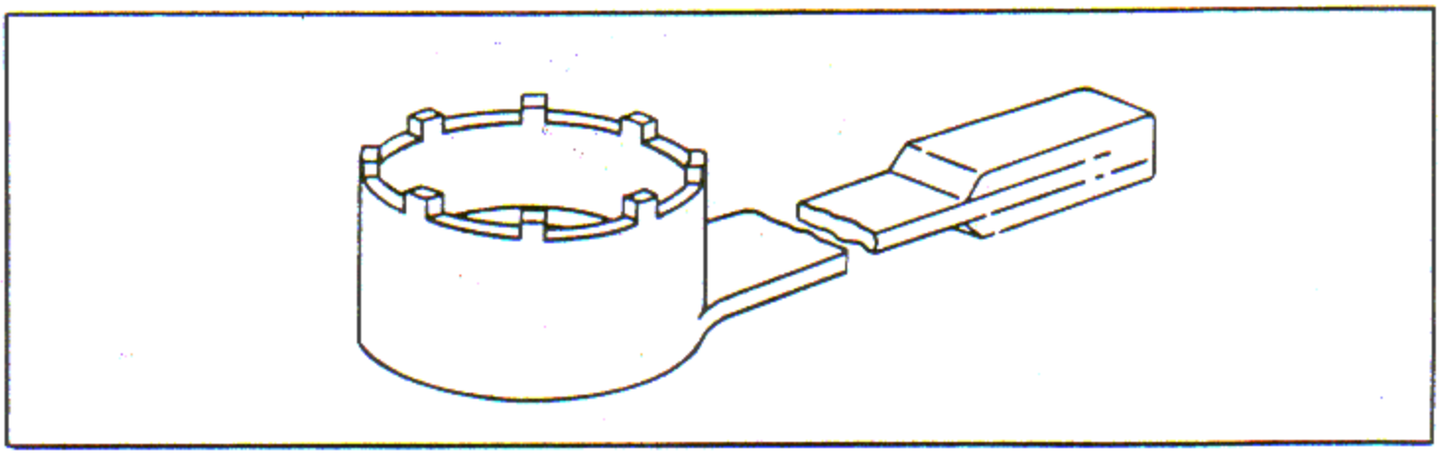

Figure 2-2. Thrust Bearing Nut Wrench (Group 104)

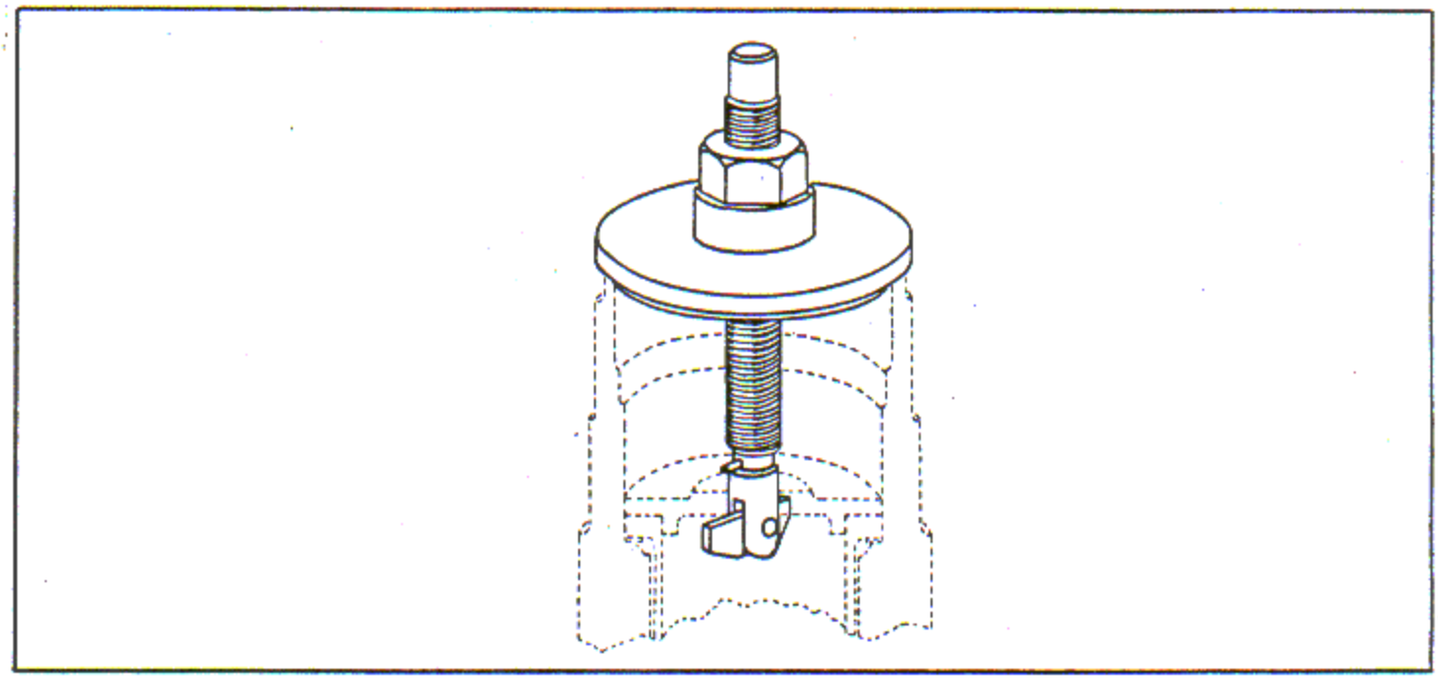

Figure 2-3. Hydro-Oil Connection Adapter Puller (Group 101)

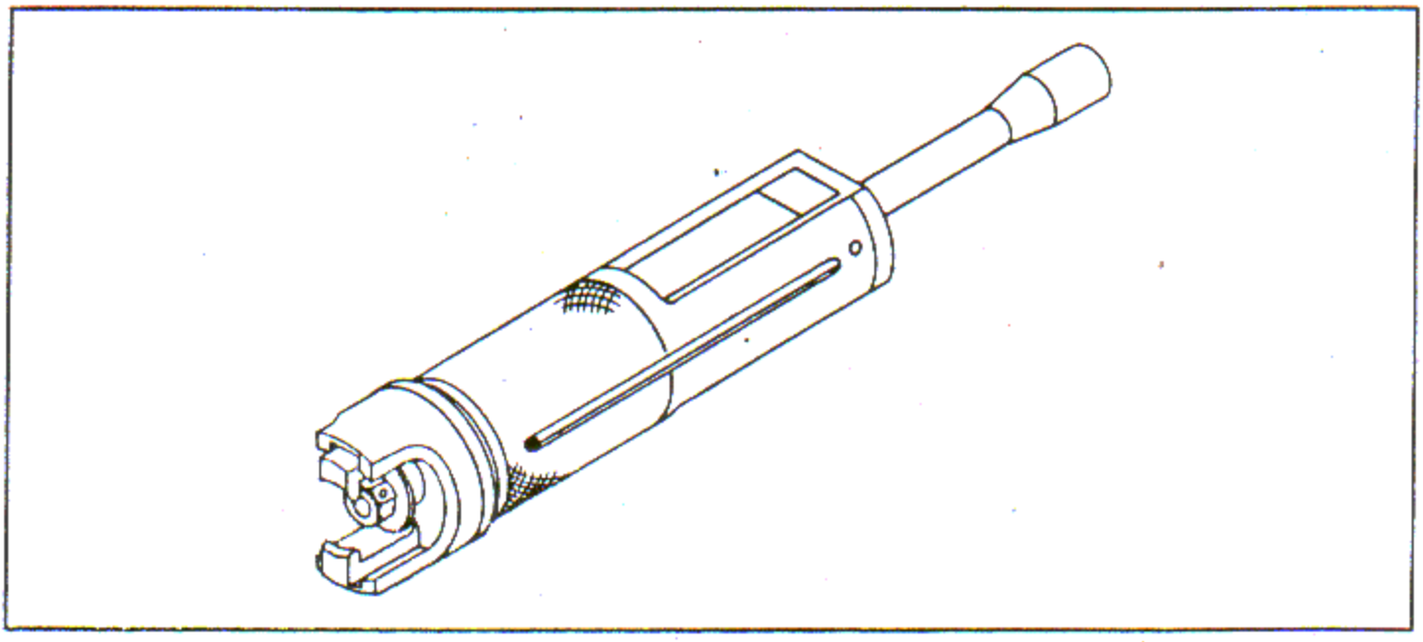

Figure 2-4. Piston Pin Puller (Groups 31A, 96)

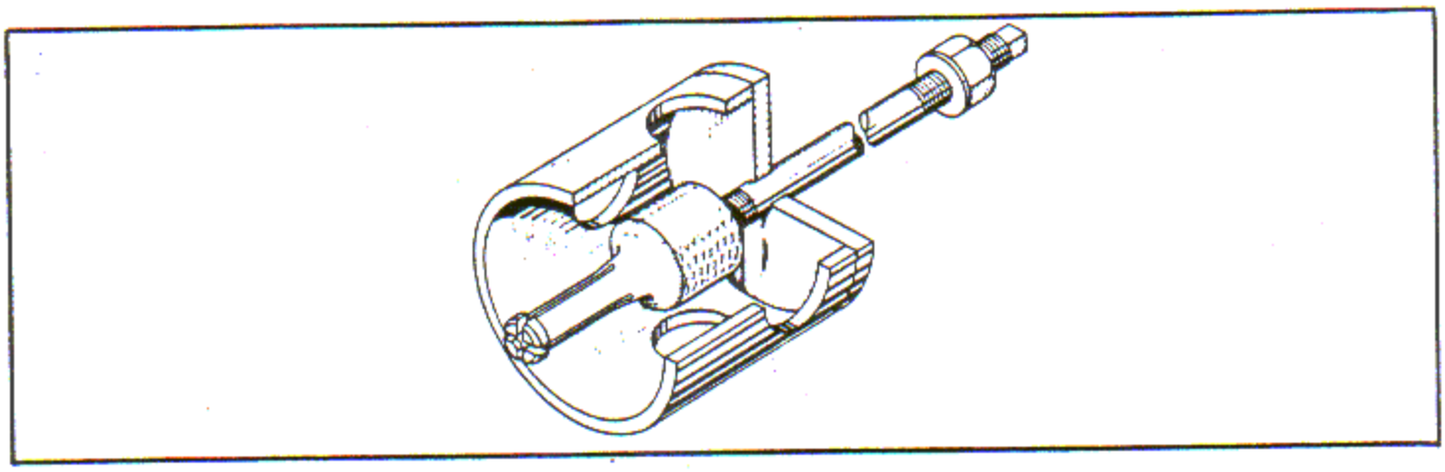

Figure 2-5. Accessory Drive and Starter Shaft Coupling Puller (Group 3)

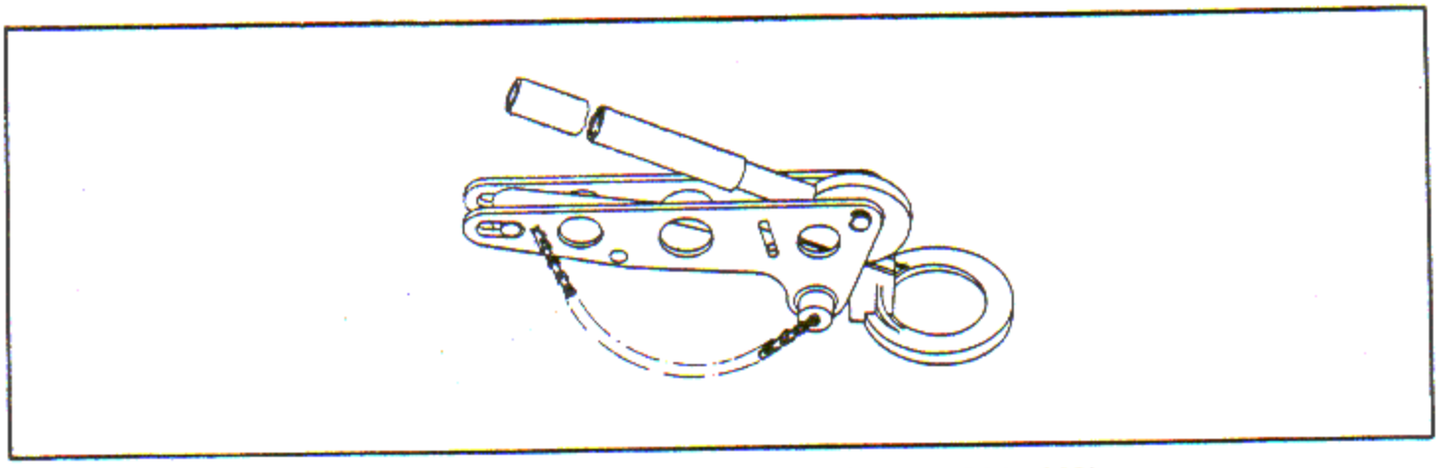

Figure 2-6. Valve Spring Compressor (Groups 31A, 140)

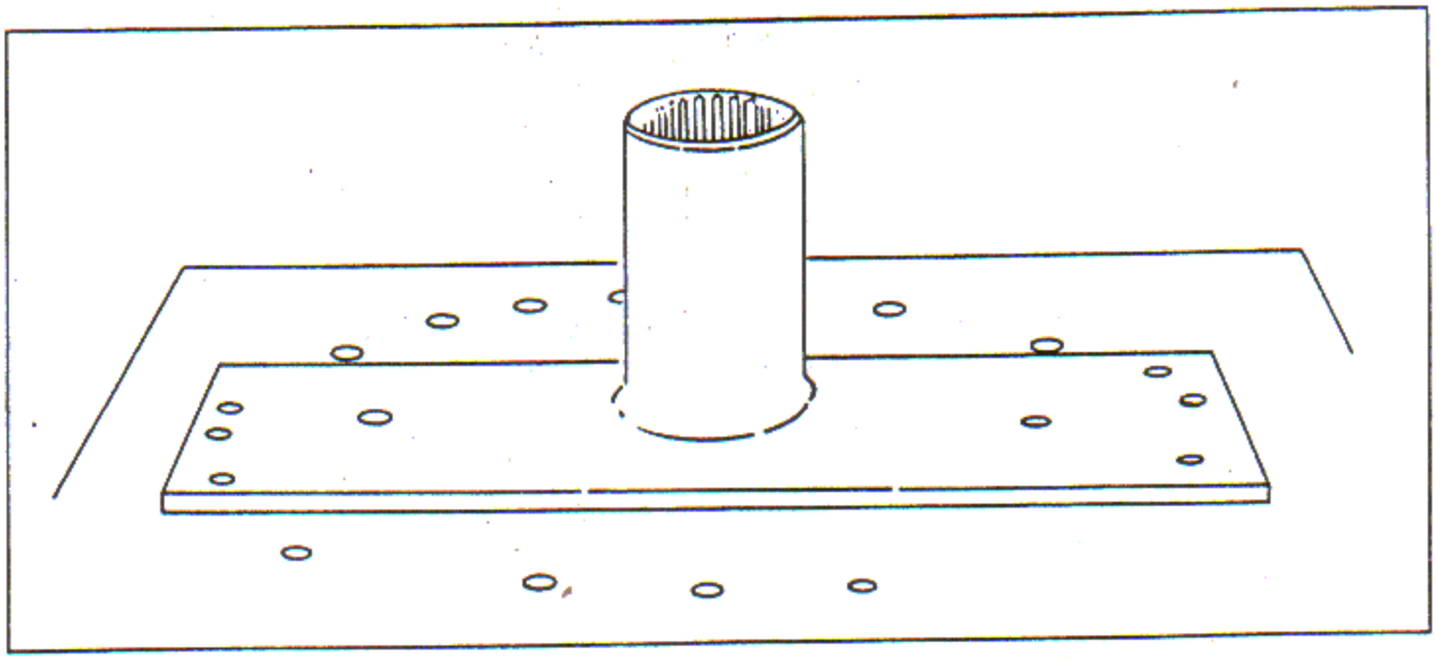

Figure 2-7. Impeller Shaft Locking Tool (Group 130)

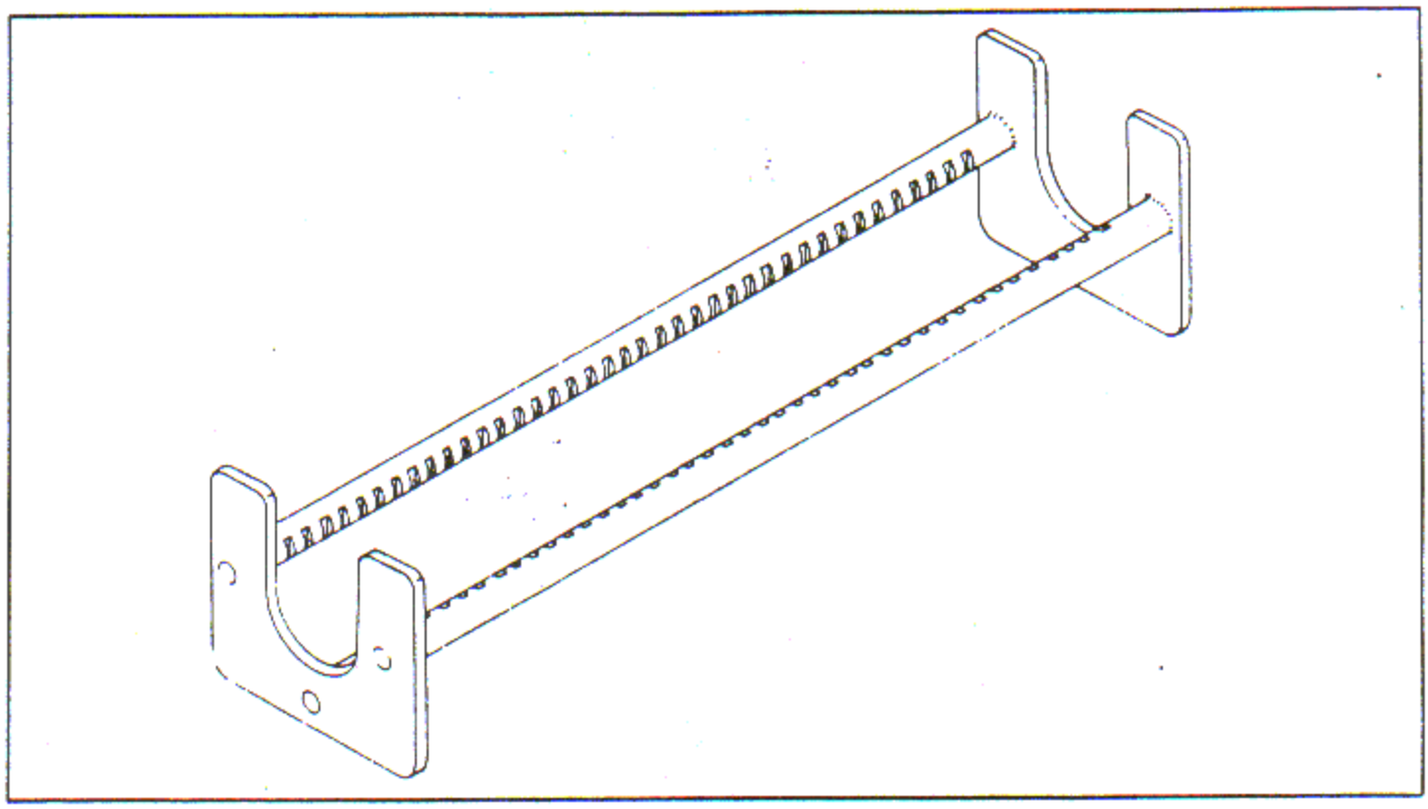

Figure 2-8. Oil Strainer Element Holding Rack (Group 90)

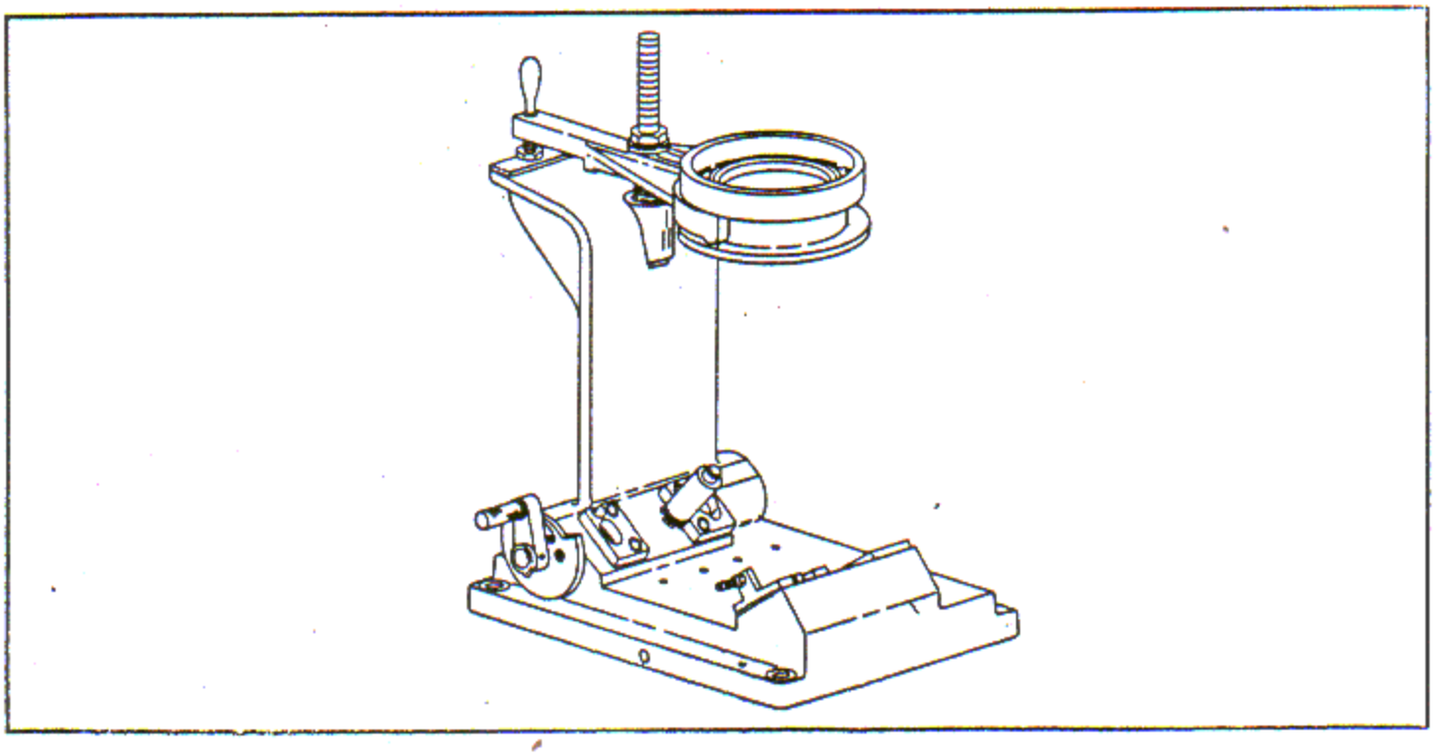

Figure 2-9. Cylinder Bore Honing Fixture (Group 33)

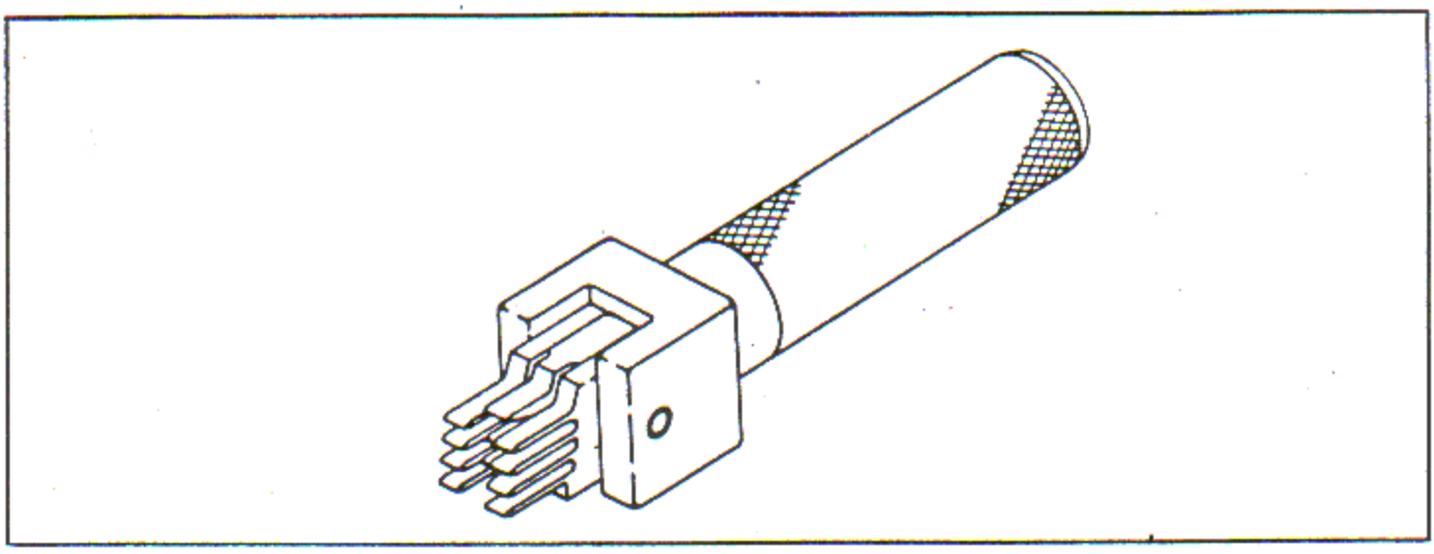

Figure 2-10. Multiple Crimping Tool (Group 36)

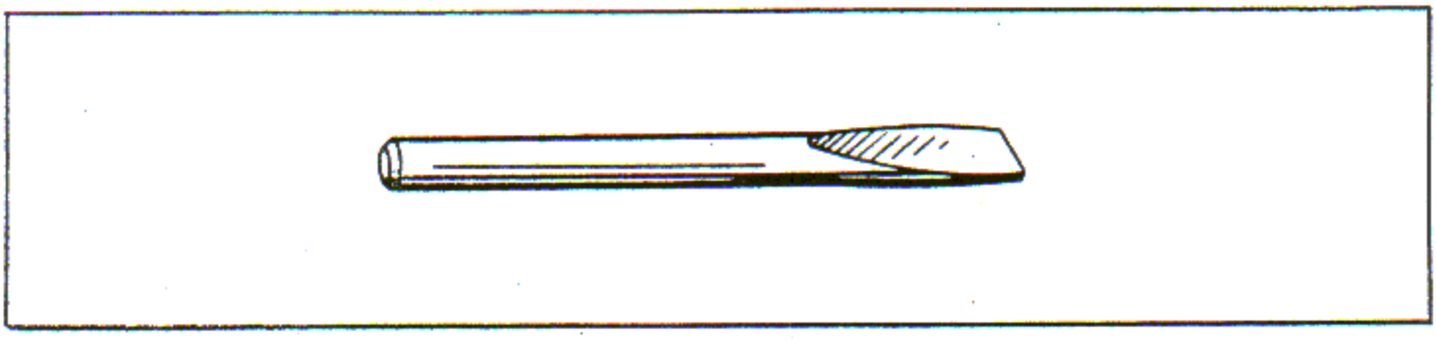

Figure 2-11. Impeller Shaft Retainer Screw Staking Punch (Group 70)

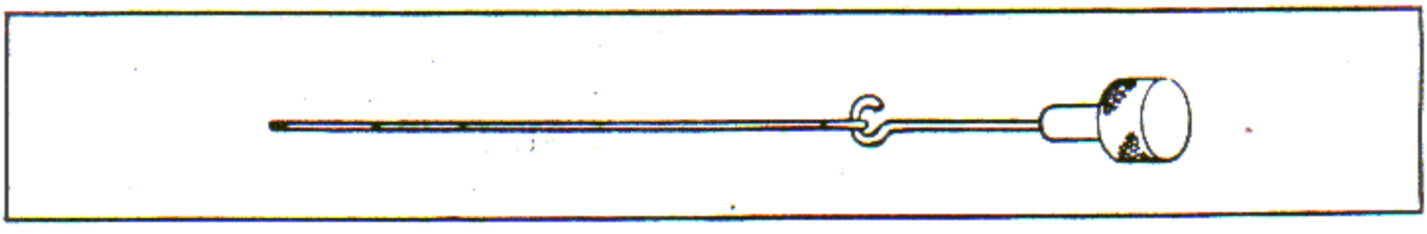

Figure 2-12. Ignition Lead Puller (Group 61)

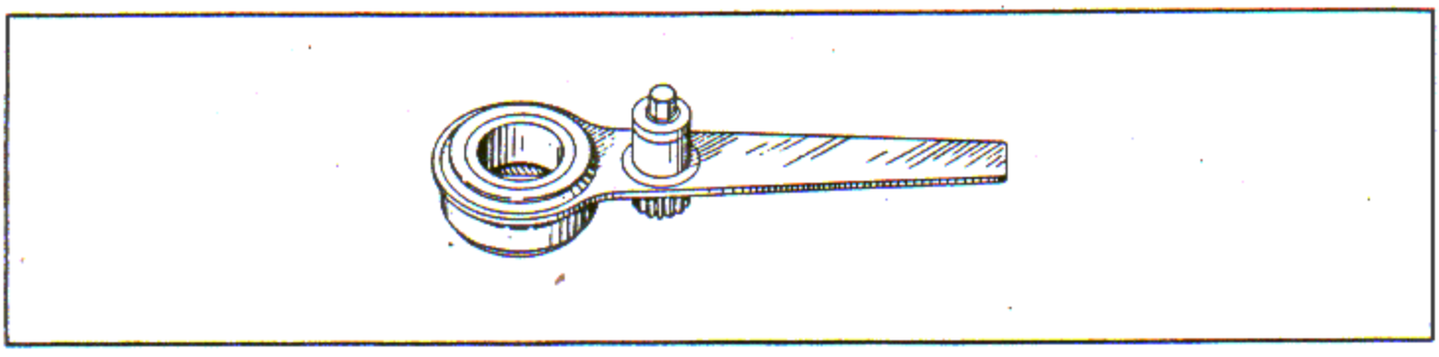

Figure 2-13. Reduction Driving Gear Nut Wrench (Group 112)

TABLE 2-2. NUMERICAL TOOL LIST

Tool Number		Group Number
36194	(Superseded by 807060)	42
80198		22
80262	(Superseded by 801712)	140
80292		99
80309		22
80409	(Superseded by 809724)	31
80433		118
80440	(Superseded by 803145)	98
80449		122
80851		118
81323		123
81357	(Superseded by 810080)	123
81402		17, 68
81403	(Use R41-W-3033-57)	118
81479		118
82043		97
82044	(Superseded by 808575)	36
82195	(Superseded by 804671)	103
82200		22
82243		51, 58, 76
		89
82246		51, 58
82247		51, 58
82249		2
82250		2
82267		68
82297	(Use commercial equiv.)	60
82361		67
82371		67
82567	(Superseded by 810081)	123
82641	(Supersedes 806176)	74
82664	(Supersedes 806177)	74
82670		113
82676		79, 86A, 88
82765		118
82809		131, 133A
82889		104
82914	(Use standard equipment)	40
83052	(Superseded by 808419)	64
83130		31A, 34
83138		39
83162		39
83269		77
83308		99
83345		97
83373		97
83409		97
83413		97
83415		77
83417		77
83421		77, 97
83552		83
83561		83
83639	(Superseded by 809738)	59, 60
83642		59
83662		57, 59
83666		57
83678	(Superseded by 808269)	42
83679	(Superseded by 808273)	42
83717	(Superseded by 809261)	84
83764	(Superseded by 808271)	42
83802	(Manufacture locally)	64
83819		82
83835		54
83851	(Superseded by 809542)	84, 136
83863	(Superseded by 802836)	131
83873		76
83875		2, 51, 58, 76
83877		76
83921	(Use commercial equiv.)	2, 51, 58, 76, 89
83922		99
83995		100
84246		82
84277		84, 136
84294		66
84304		77
84308		100
84309		100
84356		19
84444	(Superseded by 809531)	84
84463		70
84510	(Superseded by 809525)	84
84536		115
84617		100

TABLE 2-2. NUMERICAL TOOL LIST - Continued

Tool Number		Group Number
84618		100
84619		100
84626		100
84627		100
84628		100
84657		51
84692		63
84757		33
84761		64, 133A
84770		107, 122
84848	(Superseded by 809526)	84, 136
84869		48
84904		84, 136
84922	(Use R41-W-3571)	18, 31, 34, 60, 84 108, 136
84949	(Superseded by 809395)	19
84975		75
84989		130
800040	(Use standard equipment)	125
800041	(Use standard equipment)	82
800045	(Use standard equipment)	125
800047	(Use R40-H-912)	125
800053		69
800065		128
800067		128
800068		128
800069		128
800070		128
800071		128
800081	(Use standard equipment)	82
800082	(Use standard equipment)	82
800091		67
800096		56, 80
800099		118
800100		118
800101		118
800104		118
800106	(Supersedes 802411)	118
800111		118
800130		18
800154	(Use standard equipment)	100
800187		100
800194	(Use standard gage)	100
800207		32, 75
800230		81
800231		81
800253		125
800315	(Use G5120-228-9510 and G5120-228-9512)	42
800373		137
800523		127
800562		114
800630		124
800637	(Superseded by 809734)	59, 60
800638	(Superseded by 809735)	59, 60
800639	(Superseded by 809736)	59, 60
800641		33
800643		59
800684		38, 87
800695		125
800758		127
800781		76
800824		54
800878		122
800976	(Use R40-C-1122-40)	60
800991	(Superseded by 810305)	112
800966		57
801005		54
801089	(Superseded by 809543)	84, 136
801090	(Superseded by 809545)	84, 136
801091	(Superseded by 809547)	84, 136
801097		90
801151		84
801152		84
801155		84
801157		84
801158		84
801159		60, 84
801160		59, 60, 84
801163		59, 60, 84
801165		59, 60, 84
801179		97
801205		135
801206		135
801243	(Use local facilities)	136
801498		64
801499		64

TABLE 2-2. NUMERICAL TOOL LIST - Continued

Tool Number		Group Number	Tool Number		Group Number
801500		64	802392		67
801501		64	802403		97
801503	(Superseded by 808577)	64	802411	(Superseded by 800106)	118
801505		64	802526	(Use R41-W-3565)	87, 110, 116
801530		66			
801550		64, 84, 136	802621	(Use commercial equiv.)	105
			802622	(Use commercial equiv.)	32, 33, 44, 75, 105
801555		64			
801556		64	802680		133
801614		64	802682		133
801719		53	802688	(Superseded by 810083)	123
801763		127	802690	(Use R41-G-73)	123
801789		15	802700		67, 68
801793		131, 134	802775		37
801812	(Supersedes 80262)	36A, 140	802805	(Superseded by 809740)	59, 60
801864		29	802806	(Superseded by 809741)	59, 60
801890		97	802807	(Superseded by 809742)	59, 60
801892		97	802820		59
801914		100	802821		59
801917		100	802822		59
801918		100	802832		59
801926		97	802836	(Supersedes 83863)	131
801928		97	802837	(Supersedes 910028)	17
801930		77	802839		74
801950		123	802840	(Superseded by 808568)	44
801999		86, 86A	802841		74
802100		4	802842		44
802100D1		4	802856		74
802100D2		4	802857		74
802052		100	802858		74
802059		100	802859		74
802097	(Use R40-H-800)	33	802860		44
802112		36, 36A	802861		44
802139		59	802862		44
802150		84, 136	802863		44
802158		77	802864		44
802177		31A, 34	802867		75
802178		37, 60	802868	(Superseded by 809888)	47
802206		77	802871	(Superseded by 807382)	75
802330		100	802872	(Superseded by 807383)	75
802358		100	802873	(Superseded by 807384)	75
802359		100	802874	(Superseded by 807385)	75
802380		100	802901		18
802381		54	802955		23

TABLE 2-2. NUMERICAL TOOL LIST - Continued

Tool Number		Group Number
802980		2
802981		2, 58, 76
802992		58
802993		58, 76
803018		51, 89
803019		51, 89
803078		92
803081		63
803082		63
803084		14
803094	(Use local facilities)	33, 44, 75
803124		48
803145		31A, 98
803162		108
803168		100
803177		42
803202		73
803203		84
803204		84
803205		84
803206		84
803224	(Superseded by 809549)	84
803225	(Superseded by 809551)	84
803226	(Superseded by 809553)	84
803242		137
803273		14
803277		14
803282		14
803310		94
803312		40
803328		81, 133A
803358		20
803372		85, 86A
803375		100
803376		100
803424		130
803429		9
803439	(Use 802100)	4
803485		99
803519		85
803521		85
803522	(Use local facilities)	85
803523	(Use local facilities)	136
803524	(Use local facilities)	136
803526	(Use local facilities)	136
803527	(Superseded by 809548)	84
803529		99
803530		99
803543		123
803544		123
803548	(Use standard grinding equipment)	125
803572		23, 26
803624	(Use V40-H-780)	82
803675		123
803676		123
803679		48
803720		95
803743	(Use commercial equiv.)	27, 30, 106, 112, 130
803745	(Use commercial equiv.)	112, 130
803746	(Use R41-P-2997)	27, 30, 106, 112, 130
803748		64
803750		74
803790	(Use local facilities)	77
803793		106
803822		118
803830		129
803837		36, 36A
803845		39
803846		39
803847		39
803867		33
803880	(Use local equipment)	64
803881	(Use local equipment)	64
803900	(Superseded by 810082)	123
803905		57
803906		57
803908		57
803909		57
803911		57
803912	(Superseded by 810085)	123
803925	(Superseded by 810298)	140
803979		9
803981		9
803982		9
803985		9
803996	(Use R41-K-139)	84
803997		84

TABLE 2-2. NUMERICAL TOOL LIST - Continued

Tool Number		Group Number
803998		84, 136
803999		84
804011		48
804022		81
804081		48
804087		48
804088		48
804091		48
804094		48
804096		48
804178		10, 17, 131
804228		9
804277		100
804319		2, 76
804351		36, 36A
804365		135
804366		135
804370		56
804398		43
804399		75
804400		47
804439		52
804448		42
804458	(Use commercial equiv.)	60
804599		10
804640	(Use standard equipment)	84
804655		82
804671	(Supersedes 82195)	103
804749		67
804783	(Use R41-W-3558)	37, 84
804791		92
804792		92
804809		43
804811		57
804813		57
804849		141
804854D1		81
804854D2		81
804885		38, 87
804893		76
804948	(Use R40-W-3410)	122
804964		9
804965		9
804966		9
804967		9
805003	(Supersedes 923070)	76
805092		44
805093		44
805094		44
805095		44
805096		44
805097		75
805098		75
805099		75
805100		75
805104		100
805106		89
805107		51
805108		76
805109		76
805110		76
805124		130
805139		48
805144		29
805145		29
805156		9
805190		8
805248		48
805249		48
805277		48
805284		130
805383		39
805466		130
805491		9
805504		64
805506		64
805508		64
805526	(Superseded by 809078)	14
805531	(Use commercial equiv.)	59, 60
805583		45
805590		73
805596		108
805638		84
805685		44
805687		44
805691		44
805692		44
805693		44
805695		44
805705		82

TABLE 2-2. NUMERICAL TOOL LIST - Continued

Tool Number		Group Number
805707		118
805708		118
805709		118
805711		118
805714		123
805715		123
805717	(Superseded by 808671)	123
805718		123
805719		123
805720		123
805722		123
805723		123
805725		115
805726		123
805729	(Use commercial equiv.)	57, 64
805730	(Use commercial equiv.)	119
805734		117
805746		117
805759		95
805773		36
805774		36
805777		60
805781		74
805786		32, 44, 74, 108, 123
805787		130
805794		60
805795		59
805821		118
805827	(Use commercial equiv.)	2, 51, 58, 76, 89
805828		118
805831		97
805853		54, 58
805854		54, 58
805857	(Use commercial equiv.)	76
805858	(Use commercial equiv.)	76
805859	(Use commercial equiv.)	76
805860		76
805866		72
805894	(Use G40-C-961)	119
805905		123
805906		123
805940		42
805943		42
805947		141
805965		109
805977		42
805988		84
805989		84, 136
805990		84, 136
805991		84
805992		84
805993		84
805994		84, 136
805995		84, 136
805996		84
805997		84
806120	(Use commercial equiv.)	66
806123	(Use commercial equiv.)	66
806124	(Use commercial equiv.)	66
806129		59
806149		74
806176	(Superseded by 82641)	74
806177	(Superseded by 82664)	74
806202	(Superseded by 807158)	47, 75
806259		33
806263		95
806264		95
806315		8
806346		2
806347		2
806348		2
806349		51, 58, 76, 89
806350		51, 58, 76, 89
806351		76
806352		76
806353		76
806354		112
806356		27, 30
806358		112
806376		30
806381		112
806419		108
806420		108
806422		108
806438	(Superseded by 809526)	84, 136
806443	(Superseded by 809536)	84

TABLE 2-2. NUMERICAL TOOL LIST - Continued

Tool Number		Group Number	Tool Number		Group Number
806446	(Superseded by 809541)	84	806764		1, 11
806449	(Superseded by 809547)	84, 136	806765		128
806450	(Superseded by 809549)	84	806766		128
806451	(Superseded by 809551)	84	806767		128
806452	(Superseded by 809553)	84	806769		44
806458	(Superseded by 809736)	59, 60	806770		44
806460	(Superseded by 809738)	59, 60	806771		64
806464	(Superseded by 809742)	59, 60	806773		75
806465	(Superseded by 809743)	59, 60	806791		31A, 35
806466	(Superseded by 809744)	59, 60	806793	(Use R85-I-4075)	42
806467	(Superseded by 809745)	59, 60	806794	(Use commercial equiv.)	27, 30
806486		59, 60	806797		83
806500		39	806798		83
806533		6	806799		83
806541		105	806800		83
806544		105	806801		83
806545		105	806802		77
806559		64	806803		77
806564		64	806806		65
806594		123	806807		10
806598		33	806807D1		10
806611	(Superseded by 808193)	46	806807D2		10
806623		121	806833		118
806624		121	806845	(Use R40-H-980-10)	33
806625		121	806861		123
806626		121	806862		67
806628	(Superseded by 810041)	50	806863		67
806634	(Supersedes 923223)	58, 127	806864		69
806638		39	806865		67
806639		5	806866		67
806640		64	806867		67
806643		15	806868		67
806644		108	806870		67
806645		36	806891		21
806681	(Supersedes 923224)	58	806894		21
806682	(Supersedes 923223)	127	806902		130
806689		51, 58, 76	806904		75
806699	(Use local equipment)	31A, 36A, 73	806915		31A, 83
			806942		61
806702	(Use local equipment)	31, 36A, 43	806943		16
			806946		47, 75
806723		39	806954		75
806733	(Use local facilities)	17	806958	(Use R87-HSP-ST-5003)	104
806735		101	806960	(Use R87-HSP-ST-5006)	104
806747		23	806969	(Use KS-2143)	104
806750		49	806970	(Use KS-2074)	104

TABLE 2-2. NUMERICAL TOOL LIST - Continued

Tool Number		Group Number	Tool Number		Group Number
806973		47	807207		39
807048		17	807210D1		111
807049		129	807210D2		111
807050		129	807256		43
807060	(Supersedes 36194)	42	807370		47
807064		115	807374		75
807069		42	807379		47
807103		71	807381		47
807112	(Superseded by 808691D2)	27	807382	(Supersedes 802871)	75
807113	(Superseded by 808691D1)	27	807383	(Supersedes 802872)	75
807115		3	807384	(Supersedes 802873)	75
807119	(Use standard equipment)	81	807385	(Supersedes 802874)	75
807130	(Procure locally)	81	807389		47
807131	(Procure locally)	81	807390		47
807132	(Procure locally)	81	807476		47
807133	(Procure locally)	81	807488		118
807137	(Procure locally)	81	807535D1		89
807141		132	807535D2		89
807142		132	807575		73
807143		132	807586		31A, 34
807155		44	807586D2		34
807158	(Supersedes 806202)	47, 75	807586D3		34
807159	(Superseded by 808552)	75	807587		135
807167		44	807600		44
807168		44	807601		44
807169		44	807602		44
807170		44	807606		44
807171		44	807607		44
807188	(Supersedes 923421)	47, 75	807608		44
807189	(Supersedes 923423)	75	807610		44
807190	(Supersedes 923490)	71	807611		44
807193		39	807612		44
807194		39	807613		44
807195		39	807614		44
807196		39	807615		44
807197		39	807616		44
807198		39	807617		44
807199		39	807618		44
807200		39	807619		44
807201		39	807620		44
807202		39	807621		44
807203		39	807622		44
807204		39	807623		44
807205		39	807624		44
807206		39	807625		44

TABLE 2-2. NUMERICAL TOOL LIST - Continued

Tool Number		Group Number
807626		44
807627		44
807628		44
807629		44
807630		44
807631		44
807632		44
807635		44
807659		81
807660		81
807661		81
807662		81
807663		81
807664		81
807665		81
807666		81
807706		68
807722	(Use B59919B)	36
807743	(Use commercial equiv.)	93
807760		47
807762		47
807779		31A, 36A, 131
807787		73
807788		43
807826		119
807827		119
807828		119
807829		119
807830		119
807831		119
807832		119
807833		119
807834		119
807835	(Procure locally)	119
807836		119
807837		119
807905	(Supersedes 923249)	48
807906	(Use commercial equiv.)	48
807922		48
807958		74
807961	(Superseded by 808768)	47
807969		44
808048		47
808050		114
808051		114
808057		114
808058		114
808059		114
808060		7
808061		7
808062		7
808063		7
808064		8
808065		8
808082		32
808124		31A, 35
808131		120
808140		110
808171		31A, 35
808193	(Supersedes 806611)	31A, 46
808257		31A, 140
808269	(Supersedes 83678)	42
808270		42
808271	(Supersedes 83764)	42
808273	(Supersedes 83679)	42
808294D1		17
808294D2		17
808294D3		17
808295		11
808321	(Superseded by 808474)	81
808323		77
808351		54, 58
808352	(Use commercial equiv.)	54, 58
808353		54, 58
808354		58
808355		54
808357		54, 58
808378		81
808382		81
808385		81
808400D6		36, 36A
808401		138
808402		138
808403		138
808404		138
808405		138
808406		138
808407		138
808408		138
808409		138

TABLE 2-2. NUMERICAL TOOL LIST - Continued

Tool Number		Group Number	Tool Number		Group Number
808410		138	808735		47
808418		64	808752		17
808419	(Supersedes 83052)	64	808753		17
808421		100	808761		142
808422		100	808763		142
808424		100	808768	(Supersedes 807961)	47
808425		100	808779		46
808428		44	808780	(Supersedes 923139)	64
808429		45	808801		97
808430	(Superseded by 809633)	44	808802		97
808431		45	808826		36
808443	(Superseded by 809527)	84	808858		124
808444	(Superseded by 809529)	84	808863		18, 31, 34,
808445	(Superseded by 809533)	84			55, 60, 84,
808446	(Superseded by 809535)	84			108, 136
808447	(Superseded by 809538)	84	808864		18, 31, 34,
808448	(Superseded by 809540)	84			55, 60, 84,
808449	(Superseded by 809544)	84			108, 136
808450	(Superseded by 809546)	84	808869		127
808451	(Superseded by 809550)	84	808899		47
808452	(Superseded by 809552)	84	808901		47
808453	(Superseded by 809556)	84	808921		42
808454	(Superseded by 809558)	84	808929		48
808455		125	808930		48
808474	(Superseded by 808321)	81	808931		48
808475		81	808932		48
808477		81	808948		36
808478	(Use commercial equiv.)	81	808950		48
808481		81	808999		33
808552	(Supersedes 807159)	75	809024		18
808568	(Supersedes 802840)	44	809030		18
808575	(Supersedes 82044)	36	809031		18
808577	(Supersedes 801503)	64	809034		18
808580	(Use commercial equiv.)	123	809036		47
808599		36	809078	(Supersedes 805526)	14
808617		81	809109		26
808628		113	809113		27
808631		113	809195		95
808633		36	809261	(Supersedes 83717)	84
808635		36	809296		98
808670		123	809316		36
808671	(Supersedes 805717)	123	809319		112
808691D1		30	809364		98
808691D2		30	809372		45
808733	(Use local facilities)	81	809379	(Supersedes 809380)	47

TABLE 2-2. NUMERICAL TOOL LIST - Continued

Tool Number		Group Number
809380	(Superseded by 809379)	47
809389		47
809391		17
809392		17
809395	(Supersedes 84949)	19
809403		75
809432	(Superseded by 810296)	116
809452		47
809485		8
809486		8
809487		8
809488		8, 47
809525	(Supersedes 84510)	84
809526	(Supersedes 84848 and 806438)	84, 136
809527	(Supersedes 808443)	84
809528	(Supersedes 806439)	84
809529	(Supersedes 808444)	84
809530	(Supersedes 806440)	84
809531	(Supersedes 84444)	84
809532	(Supersedes 806441)	84
809533	(Supersedes 808445)	84
809534	(Supersedes 806442)	84
809535	(Supersedes 808446)	84
809536	(Supersedes 806443)	84
809537	(Supersedes 806444)	84
809538	(Supersedes 808447)	84
809539	(Supersedes 806445)	84
809540	(Supersedes 808448)	84
809541	(Supersedes 806446)	84
809542	(Supersedes 83851)	84, 136
809543	(Supersedes 806447 and 801089)	84, 136
809544	(Supersedes 808449)	84
809545	(Supersedes 806448 and 801090)	84, 136
809546	(Supersedes 808450)	84
809547	(Supersedes 806449 and 801091)	84, 136
809548	(Supersedes 803527)	84
809549	(Supersedes 806450 and 803224)	84
809550	(Supersedes 808451)	84
809551	(Supersedes 803225 and 806451)	84
809552	(Supersedes 808452)	84
809553	(Supersedes 806452 and 803226)	84
809554		84
809555		84
809556	(Supersedes 808453)	84
809557		84
809558	(Supersedes 808454)	84
809559		84
809562	(Use local facilities)	32
809595		39
809613		44
809633	(Supersedes 808430)	45
809653		36
809654		36
809666		36
809667		36
809722	(Use local facilities)	36
809724	(Supersedes 80409)	31
809734	(Supersedes 800637 and 806456)	59, 60
809735	(Supersedes 800638 and 806457)	59, 60
809736	(Supersedes 800639 and 806458)	59, 60
809737	(Supersedes 806459)	59, 60
809738	(Supersedes 83639 and 806460)	59, 60
809739	(Supersedes 806461)	59, 60
809740	(Supersedes 802805 and 806462)	59, 60
809741	(Supersedes 802806 and 806463)	59, 60
809742	(Supersedes 802807 and 806464)	59, 60
809743	(Supersedes 806465)	59, 60
809744	(Supersedes 806466)	59, 60
809745	(Supersedes 806467)	59, 60
809763		33
809780	(Supersedes 809317)	13
809781	(Supersedes 809318)	13
809793		36
809833		81
809834		81
809835		81

TABLE 2-2. NUMERICAL TOOL LIST - Continued

Tool Number		Group Number
809836		81
809839		81
809840		81
809841		81
809842		81
809886		19
809887		19
809888	(Supersedes 802868)	47
809917		125
809918		125
809931		32, 44
809932		32, 44
809937		29
809968	(Supersedes 807108)	90
809969		28
809970		28
810005	(Use local equipment)	48
810017		95
810028		48
810028D1		48
810028D2		48
810029	(Use local equipment)	48
810035	(Use local equipment)	48
810036	(Use local equipment)	48
810037		48
810041	(Supersedes 806628)	50
810063		48
810068		48
810068D11		48
810080	(Supersedes 81357)	123
810081	(Supersedes 82567)	123
810082	(Supersedes 803900)	123
810083	(Supersedes 802688)	123
810084	(Supersedes 802689)	123
810085	(Supersedes 803912)	123
810086		123
810130	(Use air gage)	81
810132	(Use air gage)	81
810133	(Use air gage)	81
810138	(Use air gage)	81
810140	(Use air gage)	81
810141	(Use air gage)	81
810142	(Use air gage)	81
810143	(Use air gage)	81
810163		123
810164		123
810165		123
810166		123
810167		123
810168		123
810169		123
810170		123
810180		26, 29
810209		122
810215		26
810217		26
810232		47
810252		12
810252D3		12
810254		47
810255		47
810256		47
810266		31A, 34
810273		64
810275		21
810280	(Supersedes 923085)	106
810295		131, 133A
810296	(Supersedes 809432)	116
810298	(Supersedes 803925)	31A, 36A, 140
810304		10
810304D1		10
810304D2		10
810305	(Supersedes 800991)	112
810308		95
810309		95
810311		142
810312		142
810313		142
810324		21
810365		3
810365D5		3
810367		29
810369		29
810372		18
810378		18
810379		18
810383		51
810384		51
810389		44
810402		97

TABLE 2-2. NUMERICAL TOOL LIST - Continued

Tool Number		Group Number	Tool Number		Group Number
810403		77	810553		120
810404		32	810553D11		120
810405		32	810553D15		120
810408		33	810556		118
810409		33	810557		116
810410		33	810600		78
810411		33	810606		78
810415		32	810612		91
810423		90	810623		91
810425		114	810624		91
810426		114	810625		91
810427		134	810626		91
810428		134	810627		91
810429		134	810642		33
810430		134	810667		32
810431		134	810682		123
810432		134	810683		55
810433		134	810690		85
810434		134	810702		32
810435		134	810705		90
810436		134	810718		55
810437		134	900266		42
810438		134	910028	(Superseded by 802837)	17
810439		134	923050		24
810440		134	923052		63
810441		134	923053		17
810446		17	923054		23
810447		17	923055		31A, 99
810453		17	923057		53
810454		17	923062	(Superseded by 809752)	126
810455		135	923067		116
810457		122	923070	(Superseded by 805003)	76
810473		26	923073		41
810501		7	923076		78
810503		21	923085	(Superseded by 810280)	106
810504		21	923087		41, 86A
810511		31A, 96	923112	(Use local facilities)	31A, 140
810513	(Use equivalent)	106	923125		37
810514		36	923129		64
810522		90	923130		64
810527		28	923131		64
810528		28	923134		64
810529		28	923135		64
810539		93	923136		64
810540		93	923138		64

TABLE 2-2. NUMERICAL TOOL LIST - Continued

Tool Number		Group Number	Tool Number		Group Number
923139	(Superseded by 808780)	64	923275		137
923146		62, 64	923276		137
923147	(Use R41-L-139)	84	923277		137
923152		41	923278		137
923163		17	923306	(Supersedes 807208)	90
923191		90	923389	(Supersedes 900268)	29
923198		116	923393		31A, 34
923208		27, 30	923394		34
923225		102	923396		34
923228		52	923397		34
923231		116	923398		34
923239		118	923399		34
923242		118	923410		82
923243		118	923421	(Superseded by 807188)	47, 75
923244		118	923423	(Superseded by 807189)	75
923245		118	923484		141
923247		84, 136	923490	(Superseded by 807190)	71
923248		57	923552		112
923249	(Superseded by 807905)	13			

SECTION III

DISMANTLING

3-1. GENERAL.

3-2. DISMANTLING INSTRUCTIONS. The following instructions are to be observed in dismantling the engine.

a. All parts and assemblies should be visually inspected at each stage of dismantling. Any indication of scoring or burning or work incorrectly performed in previous overhaul should be reported in accordance with current practice.

b. Tools and methods used as described in the text will avoid damage to engine parts during dismantling.

c. Where no special tools are listed, use the applicable standard tools.

d. Parts to be reinstalled in their original location are to be tagged accordingly. Use a wax pencil on stainless steel parts not subjected to heat. Chalk or soap stone is used if stainless steel parts are subjected to heat.

CAUTION

Identification by means of electric etching or metal stamping will not be used on stressed engine parts. Such methods may produce surface cracks which will progress during engine operation.

e. Use special care in handling resin coated parts; the coating will not withstand rough handling.

f. Use corrosion preventive compound, Specification MIL-C-6529, Type II, to cover steel parts which may be exposed for lengthy periods. Refer to Specification MIL-E-6058 and MIL-E-6059.

NOTE

MIL-C-81309 Grade A or VV-L-800 preservative compounds may be used on all metal engine component parts during rework for corrosion protection for a period not exceeding twenty-one days.

g. Use suitable plugs and protective covers to prevent dirt, dust and foreign material from entering engine. Ensure that all dust caps used for protection of open lines or hoses are installed over ends and not inside of these parts in order to prevent accidental omission during assembly.

h. Observe safety rules at all times.

3-3. ENGINE SHIPPING CONTAINER DESCRIPTION.

NOTE

Containers may differ externally in appearance but the following information will be applicable to all containers.

a. The engine is stored or shipped in a cylindrical metal container conforming to Specification MIL-C-5584, Type I. The container is approximately 62 inches in diameter by 62 inches in height. The empty weight is 1500 pounds; with engine the weight is about 2900 pounds.

b. The cover, incorporating lifting provisions for overhead facilities, is bolted to the container base. The cover also provides an air fill valve, pressure relief valve, humidity indicator, cavity for engine record book and access hole to a desiccant holder in base of container.

c. The base of container has hardwood skids to permit lifting by means of a fork lift truck.

d. The sealed container is airtight and is pressurized to four to six psi with dehydrated air. The container, accessory mounting facilities, the desiccant (when reactivated) and engine adapter mounting plates are reusable.

3-4. ENGINE SHIPPING CONTAINER COVER REMOVAL.

CAUTION

Pressure must be released before removing bolts from cover. Release air pressure slowly to preclude damage to carburetor diaphrams.

a. Position engine shipping container under a hoist.

b. Release air pressure by pressing on stem of air fill valve or removing valve from core.

c. Remove the nuts and bolts securing the engine shipping container cover to the base.

d. Attach hoist and sling to lifting provisions of engine shipping container cover. Lift cover straight up so as to clear base containing the engine. See figure 3-1.

3-5. ACCESSORY MOUNTING ASSEMBLY REMOVAL.

a. Loosen the two bolts on the propeller shaft clamp of the accessory mounting assembly.

b. Remove the six nuts and washers holding the accessory mounting assembly to the cowl seal studs on the engine cylinders.

c. Lift the accessory mounting assembly clear of the propeller shaft.

d. Remove the accessory box mounting bolts and nuts.

e. Remove the box. The box contains spark plugs and crankcase breather assemblies. These items will be installed during assembly of engine.

f. Remove the bolts and nuts securing the carburetor to the mounting assembly.

g. Remove the carburetor.

NOTE

Handle and overhaul the carburetor according to manufacturer's instructions.

3.6. ENGINE REMOVAL FROM SHIPPING CONTAINER. (See tool group 99.)

a. Remove the propeller shaft protective shipping cap and sleeve, and install engine hoist eye on the propeller shaft threads.

b. Using a suitable hoist, remove the bolts, nuts and washers attaching the three engine adapter mounting plates to the engine shipping container base.

c. Hoist the engine straight up from the engine shipping container base. Guide engine to prevent damage during removal from base.

d. Remove the three engine adapter plates which which are secured to the engine with bolts.

e. Place the engine adapter plates and bolts in the engine shipping container base for reuse when necessary.

3-7. ENGINE INSTALLATION IN DISASSEMBLY STAND. (See tool groups 42 and 99.)

a. Position disassembly stand under the engine.

b. Lower the engine carefully into the stand using a hoist. One man should guide the engine into the stand to guard against damage. See figure 3-2.

c. Align the bolt holes in the stand with the bushings in the supercharger front housing.

d. Install the nine mounting bolts through the stand into the engine bushings; tighten the mounting bolts. Retain tension with the engine hoist until all bolts are secure.

e. Remove the engine hoist. Remove the engine hoist eye.

f. Install propeller shaft thread protector.

3-8. PREPARING ENGINE FOR DISASSEMBLY.

a. Remove the magnetic plugs which are wired to the engine.

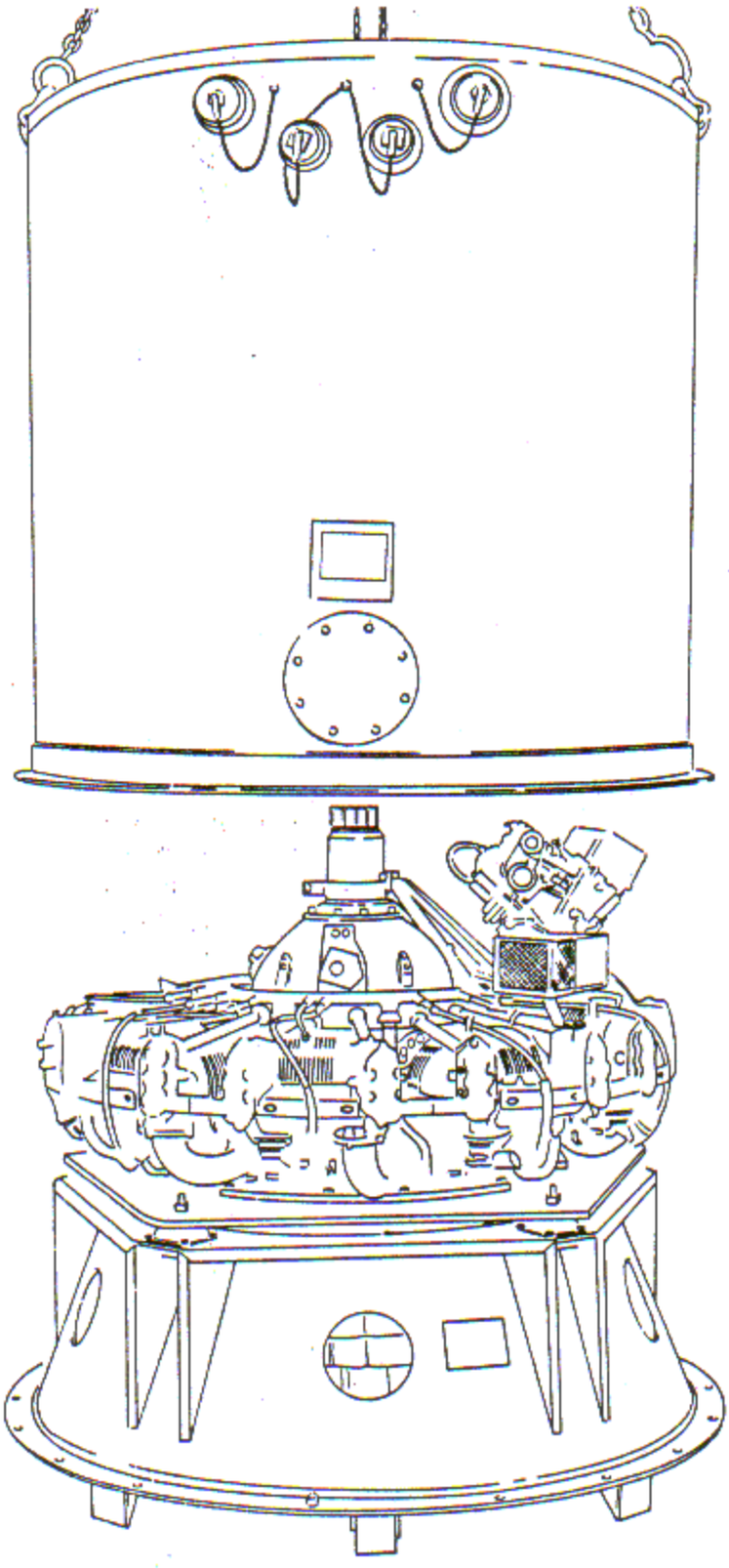

Figure 3-1. Removing Shipping Container Cover

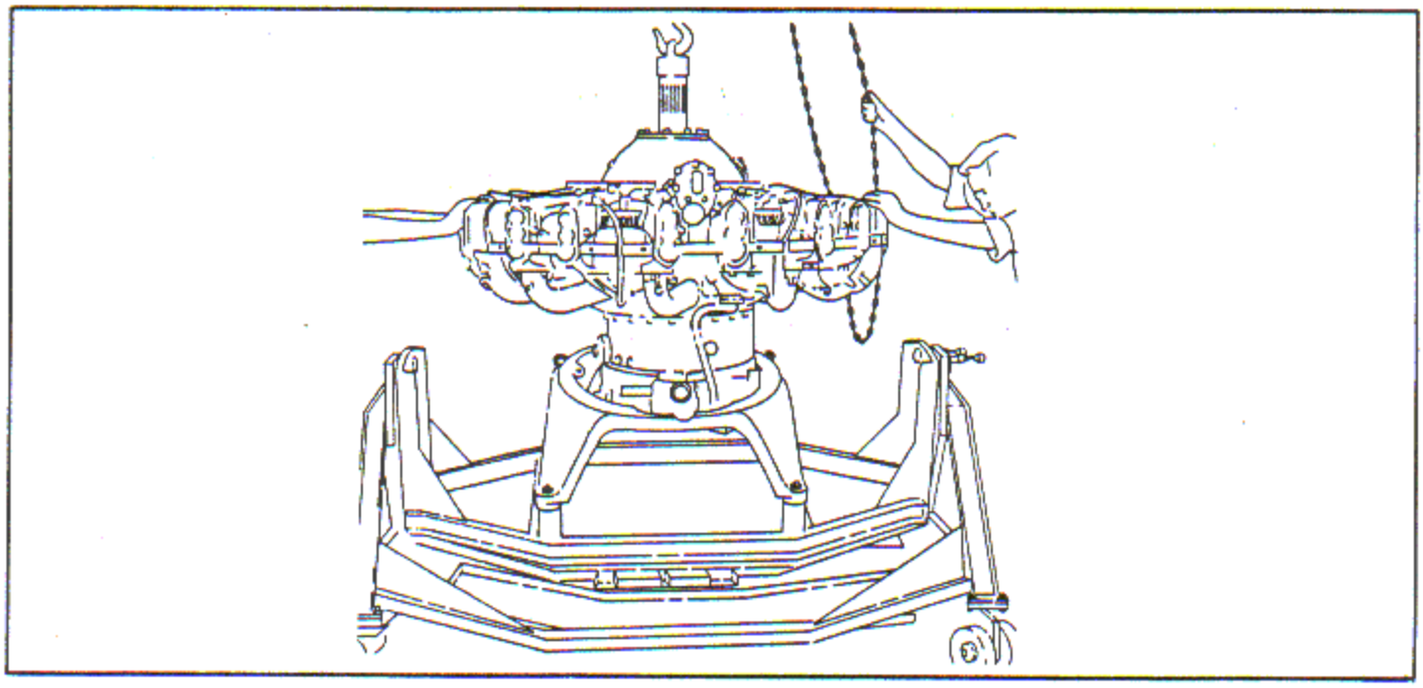

Figure 3-2. Lowering Engine into Disassembly Stand

NOTE

These plugs will be installed at assembly.

b. Remove the carburetor shipping cover and remove the dehydrating bag from the induction passage. Reinstall the cover.

c. Remove the remaining shipping parts at appropriate times during disassembly.

NOTE

Vented shipping covers are installed in the exhaust ports. Vented shipping plugs are installed in spark plug holes, governor pad cover, magnetic drain holes and oil tank vent connection.

d. Turn the engine to flight position.

e. Drain the front oil pump sump by placing a container of not less than two gallon capacity under the front sump pump and remove the dehydrating plug.

f. Remove the oil strainer and check for foreign material. Replace the strainer in the front oil sump pump.

3-9. IDENTIFICATION OF ENGINE COMPONENTS PRIOR TO DISASSEMBLY.

a. Engine parts which have developed a compatible wear pattern may be identified during engine disassembly to ensure assembly of the same mating parts in accordance with the following steps.

b. Determine the original crankcase assembly matching numbers.

NOTE

Location of the numbers will be found near the top exterior surface of the front and rear crankcase halves adjacent to the number one cylinder pad.

c. Metal stamp the mating number on the exterior surface of the crankcase front section, supercharger front and rear housings and rear accessory drive cover. Location of the markings should be as near the vertical centerline of each crankcase section as practicable, but not over two inches from the flange. Stamping of numbers shall be performed by use of either 3/16 or 1/4 inch size stamps.

d. Whenever the need for replacement of the main crankcase occurs due to damage resulting from engine failure, obliterate the markings and reidentify in accordance with the foregoing instructions.

SECTION IV

DISASSEMBLY OF SUBASSEMBLIES

4-1. GENERAL.

4-2. DISASSEMBLY INSTRUCTIONS. The following instructions are to be observed in disassembly of the engine.

a. All parts and assemblies should be visually inspected at each stage of disassembly. Any indication of scoring or burning or work incorrectly performed in previous overhaul should be reported in accordance with current practice.

b. Tools and methods used as described in the text will avoid damage to engine parts during disassembly.

c. Where no special tools are listed, use the applicable standard tools.

d. Discard all gaskets, lock wire, cotter pins, lock washers, hoses and seal rings as they are removed. Reject fiber lock nuts if the fiber portion has taken sufficient thread set to permit being tightened by hand.

e. Parts to be reinstalled in their original location are to be tagged accordingly. Use a wax pencil on stainless steel parts not subjected to heat. Chalk or soap stone is used if stainless steel parts are subjected to heat.

CAUTION

Identification by means of electric etching or metal stamping will not be used on stressed engine parts. Such methods may produce surface cracks which will progress during engine operation.

f. Use special care in handling resin coated parts; the coating will not withstand rough handling.

g. Use corrosion preventive compound, Specification MIL-C-6529, Type II, to cover steel parts which may be exposed for lengthy periods. Refer to Specification MIL-E-6058 and MIL-E-6059.

NOTE

MIL-C-81309 Grade A or VV-L-800 preservative compounds may be used on all metal engine component parts during rework for corrosion protection for a period not exceeding twenty-one days.

h. Extreme care is to be exercised in the handling and disposition of all bearings.

CAUTION

Do not intermix any bearing parts.

i. Use suitable plugs and protective covers to prevent dirt, dust and foreign material from entering engine. Ensure that all dust caps used for protection of open lines or hoses are installed over ends and not inside of these parts in order to prevent accidental omission during assembly.

j. Observe safety rules at all times.

4-3. PROPELLER SHAFT THRUST BEARING NUT REMOVAL. (See tool groups 99 and 104.)

a. Use hydraulic wrench in the following procedure. The wrench consists of housing (1, figure 4-1), thrust nut adapter (2), splined adapter (3), pointer and scale (4), jack and gage (7), relief valve (6), handle assembly (5) and ram (8).

b. Install propeller shaft thread protector if it has not been previously installed on the propeller shaft.

c. Assemble housing (1), and thrust nut adapter A (2). Slide the assembly over the propeller shaft and engage it with the thrust bearing nut.

d. Install splined adapter B, not shown, over the propeller shaft splines. Ensure that the ball handle (9), of the adapter is at the right of the propeller shaft and that the pointer is at its left limit of travel, as indicated on the scale (4).

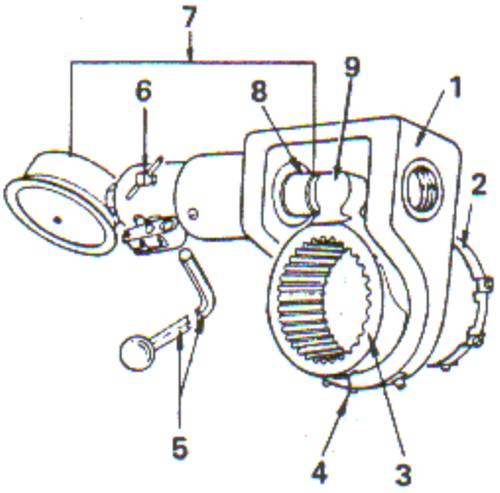

1. HOUSING
2. THRUST NUT ADAPTER
3. SPLINED ADAPTER
4. POINTER AND SCALE
5. JACK HANDLE ASSEMBLY
6. RELIEF VALVE
7. JACK AND GAGE ASSEMBLY
8. RAM
9. BALL

Figure 4-1. Thrust Bearing Nut Hydraulic Torque Wrench Assembly

e. Screw the jack and gage assembly (7, figure 4-1), into the hole at the right of the housing. Check the relief valve (6), for tightness.

f. Build up ram pressure by pumping the jack handle until the force of the ram (8), acting against the ball handle (9), of the splined adapter (3), causes the housing (1), to turn in a counterclockwise direction, and the force acting on the thrust nut adapter (2), causes the thrust bearing nut to back off its threads.

g. If the nut is not sufficiently loose when the pointer has reached the limit of its travel, open the relief valve to permit the ram to retract. Remove the splined adapter from the propeller shaft and reinstall it in its original relative position. Close the relief valve, and pump up ram pressure again.

h. Remove the torque wrench and loosen the thrust bearing nut further by using wrench. See figure 2-2.

i. Allow the nut to remain on the propeller shaft finger tight.

4-4. PROPELLER SHAFT HYDRO-OIL CONNECTION NUT AND ADAPTER REMOVAL. (See tool groups 101, 102 and 103.)

a. Remove the lock wire from the three screws that secure the propeller shaft hydro-oil connection substituting cover nut lock. Remove screws and the lock.

b. Loosen the hydro-oil connection substituting cover nut using wrench, a suitable 3/4 inch diameter bar and a hammer. See figure 4-2. Remove the nut.

c. Remove the hydro-oil connection substituting cover using puller. Remove the gasket.

d. Pull the hydro-oil connection adapter using puller. Remove the gasket. See figure 2-3.

4-5. CARBURETOR AND PRIMING SYSTEM, REMOVAL. (See tool group 13.)

4-6. CARBURETOR. If the engine has been taken from a shipping or storage container, the carburetor will have been removed. If the carburetor is mounted on the engine, remove the screen and gasket.

a. Remove all the carburetor adapter attaching nuts and washers except the two nuts at the front corners, using wrenches.

b. Partially back off each of the attaching nuts with an open end wrench, tilting the carburetor toward the rear to obtain clearance. Remove the nuts.

c. Lift the carburetor from the engine and discard the carburetor adapter gasket.

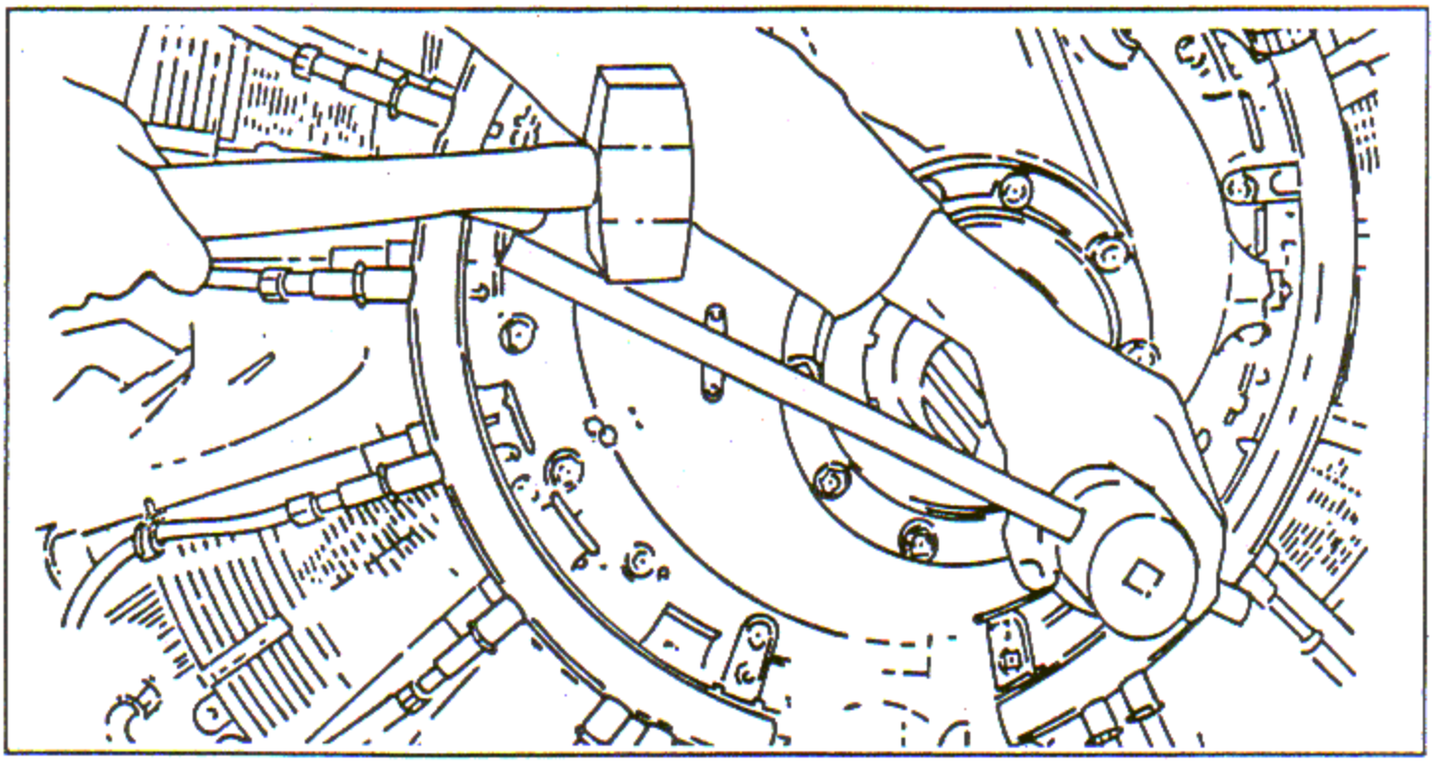

Figure 4-2. Loosening Hydro-Oil Connection Substituting Cover Nut

4-7. PRIMING SYSTEM.

a. Remove the priming hose (8, figure 4-3) from the elbow (1) in the priming valve housing on the carburetor and from the tee fitting (6) on the support bracket (2).

b. Remove both the left (7), and the right (4), priming hoses from the elbows in the carburetor adapter.

c. Break the lock wire and remove the two supporting bracket attachment bolts (3), from the left side of the accelerator pump cover. Remove the bracket and hoses as a unit and replace the bolts.

d. Remove the hoses from the tee and remove the tee from the bracket. Remove the elbows from the carburetor adapter.

e. If it is necessary to remove the elbow from the primer solenoid valve housing, remove the six attaching nuts from the cover and withdraw the cover, to make the elbow accessible.

4-8. MAGNETO REMOVAL.

a. Remove the clamps that secure the elbows on the ignition cable main conduits to the magnetos.

b. Break the lock wire that secures the spanner nut on the left and right main conduits to two of the four screws on the top of each magneto and lift the elbows from the magnetos.

c. Remove the magneto attaching nuts and the magnetos.

4-9. EXTERNAL HYDRO-OIL SUPPLY REAR TUBE REMOVAL.

a. Break the connection between the external hydro-oil supply front and rear tubes.

b. Remove the nut that secures the rear tube clamp bracket to the supercharger rear cover.

c. Disconnect the tube flange at the supercharger rear cover and remove the tube.

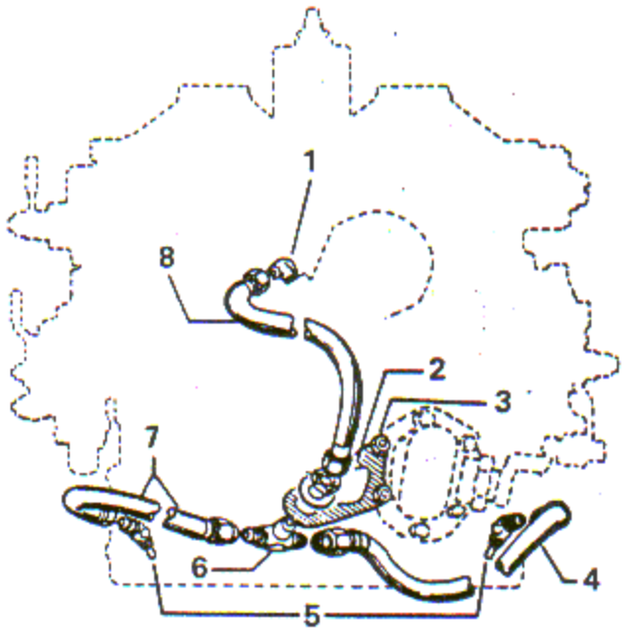

1. PRIMING VALVE TO TUBE ELBOW
2. CARBURETOR PRIMING TUBE BRACKET
3. SUPPORT BRACKET ATTACHING BOLTS
4. PRIMING CONNECTION TEE TO PRIMING ADAPTER RIGHT HOSE AND FITTING
5. PRIMING TUBE TO CARBURETOR ADAPTER ELBOW
6. PRIMING VALVE TEE
7. PRIMING CONNECTION TEE TO PRIMING ADAPTER LEFT HOSE AND FITTING
8. CARBURETOR TO PRIMING TUBE CONNECTION TEE HOSE AND FITTING

Figure 4-3. Priming System

4-10. EXTERNAL OIL SUMP TUBE REMOVAL.

a. Break the lockwire and remove the attaching screws, using wrench, and washers securing the scavenge tube rear flange to the rear pump adapter (not applicable to PPC 65 increased capacity pump).

b. Turn the engine nose down.

c. Break the lockwire and remove the attaching screws and washers securing the scavenge tube front flange to the mounting pad on the front sump.

d. Back off the oil outlet adapter on its studs (not applicable to PPC 65 pump).

e. Remove the scavenge oil drain tube. Discard the gasket and packing ring.

4-11. SUPERCHARGER REAR SECTION REMOVAL. (See tool groups 131 and 134.)

a. Remove the supercharger rear housing attaching nuts and washers.

b. Remove the clamp and bracket from the external hydro-oil supply front tube.

c. Remove the brackets and clamps from the ignition right and left hand main conduits.

d. Install hoist eye on the starter pad at supercharger rear cover. Attach chain hoist.

e. Raise the rear section. See figure 4-4. One man should operate the hoist while a second man guides the rear section from the engine and through the stand.

f. Lower the rear section into stand. Remove gaskets.

4-12. SUPERCHARGER REAR SECTION REMOVAL (ALTERNATE PROCEDURE).

a. Position the engine in a horizontal position.

b. Comply with paragraphs 4-13 through 4-19 and 4-54 through 4-63 as applicable.

CAUTION

Exercise caution during removal of rear cover.

c. Remove the supercharger rear housing attaching nuts and washers. Remove the rear housing.

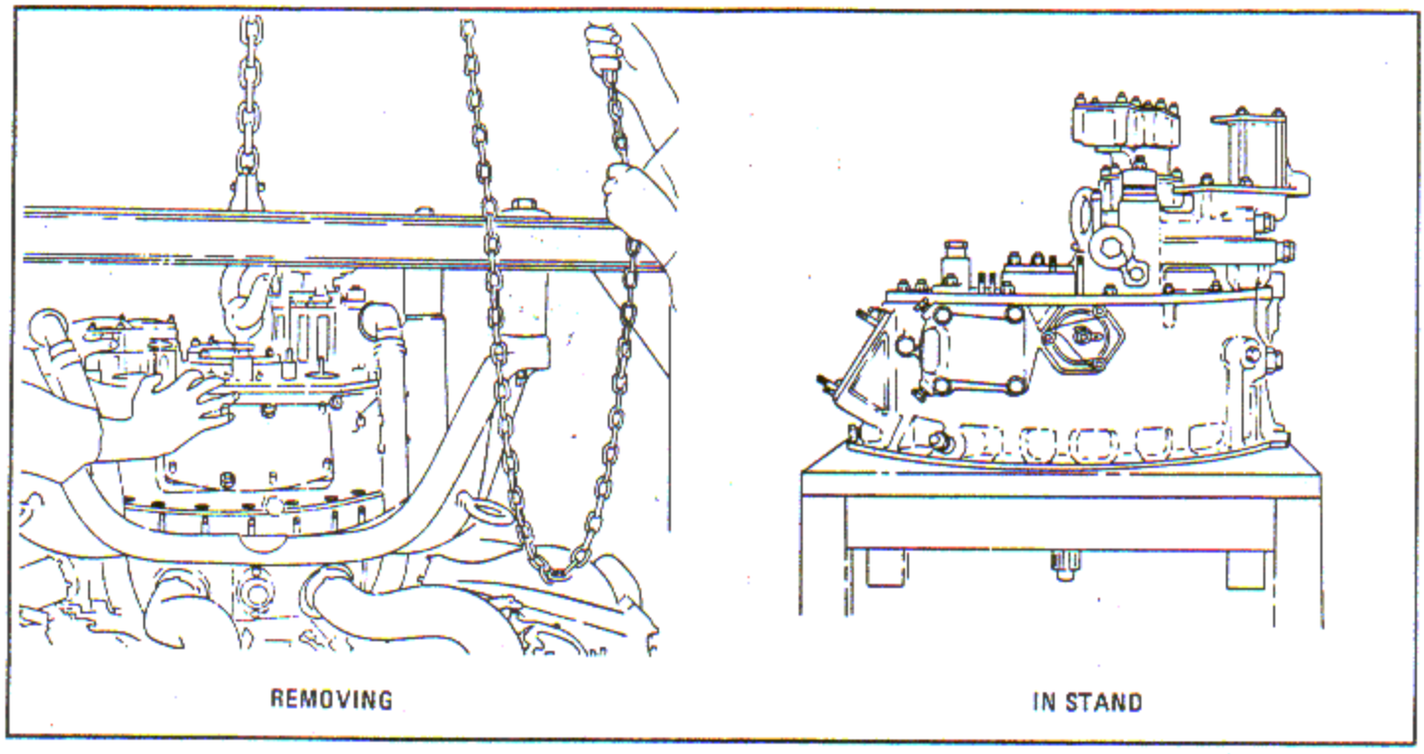

Figure 4-4. Removing Supercharger Rear Section and Placing in Disassembly Stand

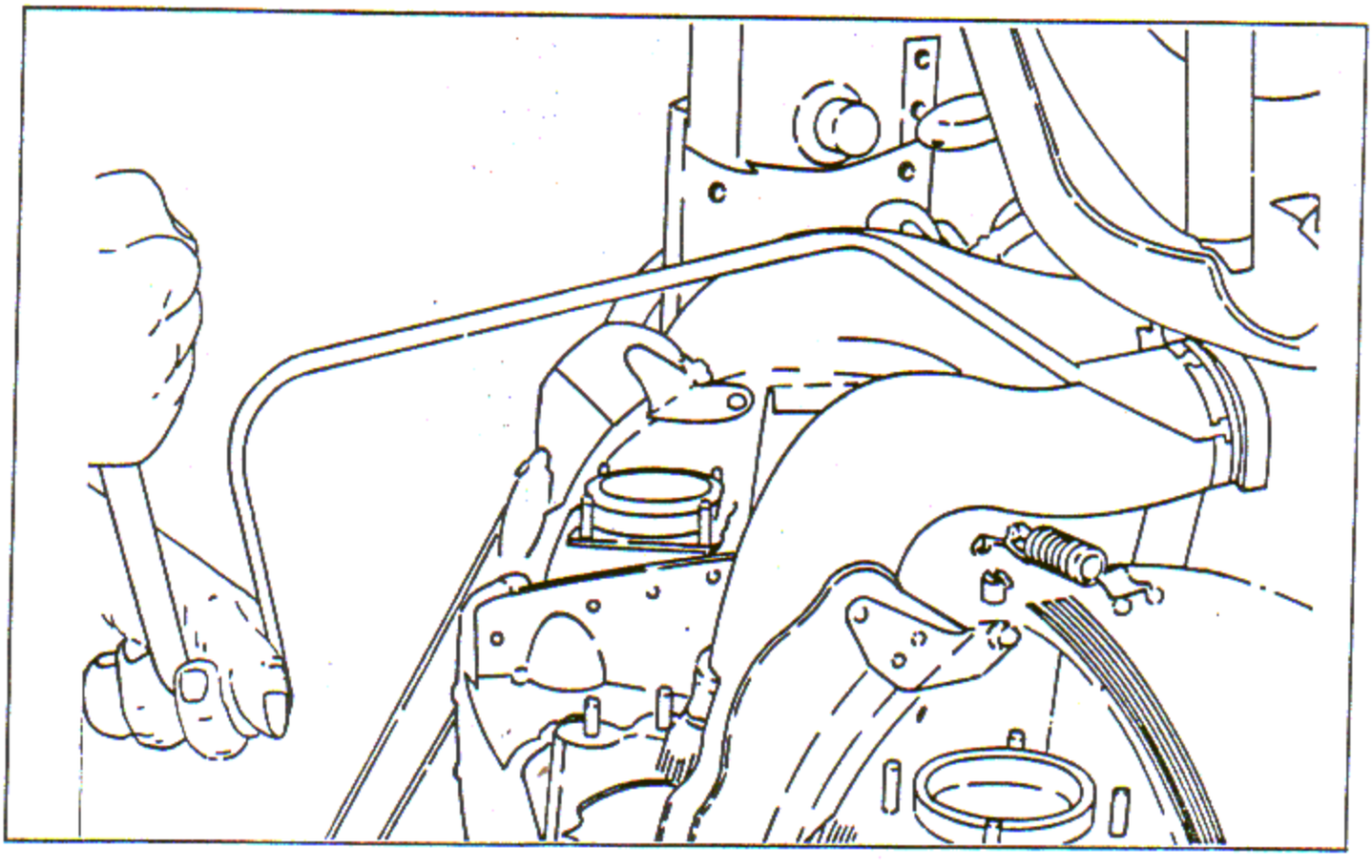

Figure 4-5. Loosening Intake Pipe Packing Nut

4-13. INTAKE PIPE REMOVAL. (See tool groups 36, 72 and 129.)

a. Loosen the intake pipe packing nuts, using wrench. See figure 4-5. Back the packing nuts onto the pipes.

b. Remove the capscrews and washers that attach the intake pipes to the intake ports of the cylinder heads and remove the intake pipes.

c. Remove the packing and metal ring from the supercharger front housing ports. Replace the intake pipe packing nuts in the supercharger front housing ports to protect the threads.

d. Install protective covers at supercharger front housing ports.

e. Install protective covers in the intake ports of cylinders. Install protective covers in the exhaust ports of R1820-76 series engines. Install protective covers in exhaust ports of R1820-80 series, -86A and -86B engine models.

4-14. REAR SPARK PLUG REMOVAL. (See tool group 124.)

a. If dehydrator plugs are installed in the rear spark plug holes, remove the plugs. If spark plugs are installed in the rear spark plug holes, disconnect the rear spark plug leads (2, figure 4-6), at the spark plugs using the applicable wrench (1).

CAUTION

Be careful to pull the leads (2) straight out of the spark plugs and place protectors over the spark plug lead terminals.

b. If the engine incorporates the channel type cylinder head air deflector, disengage the rear spark plug leads (2) from the channel sections. If the engine is equipped with the type of head deflector which provides a rear spark plug lead opening, remove the grommets from the openings and carefully pull the leads through these openings as shown.

CAUTION

Do not permit the wrench to tilt or slip during attempted removal. Serious damage to the internal insulation may result from even a slight pressure against the shielding barrel insulator.

c. Loosen all rear spark plugs using a suitable 7/8 inch deep socket. Remove the spark plugs. If a plug is seized or very difficult to remove, removal may be facilitated by turning first in a tightening direction, then in a loosening direction. A slightly higher torque is usually required.

d. Install protective covers on rear spark plug leads.

4-15. CYLINDER HEAD DEFLECTOR REMOVAL.

a. Remove the screws that secure the head deflectors to the intake and exhaust rocker boxes.

b. Remove the fiber lock nuts and screws that hold the deflector bracket at the cylinder head fin location.

c. Remove the head deflectors.

4-16. INTER-CYLINDER AIR DEFLECTOR REMOVAL.

4-16A. Remove the springs securing the inter-cylinder air deflector clamps at the underside of the cylinder as follows:

a. Turn the engine to propeller shaft up position.

b. Remove the fiber lock nuts and grommet plates from the studs on inter-cylinder deflectors between cylinders No. 1 and 2, 2 and 3, 5 and 6, 8 and 9, and 9 and 1.

c. The inter-cylinder air deflectors at cylinders 5 and 6 are attached to the front sump pump body by two capscrews.

d. Remove clamp assemblies from between cylinders 3 and 4, 4 and 5, 6 and 7, and 7 and 8.

e. Remove the inter-cylinder air deflector assemblies.

f. Remove the rubber grommets from between the rocker box cover extensions.

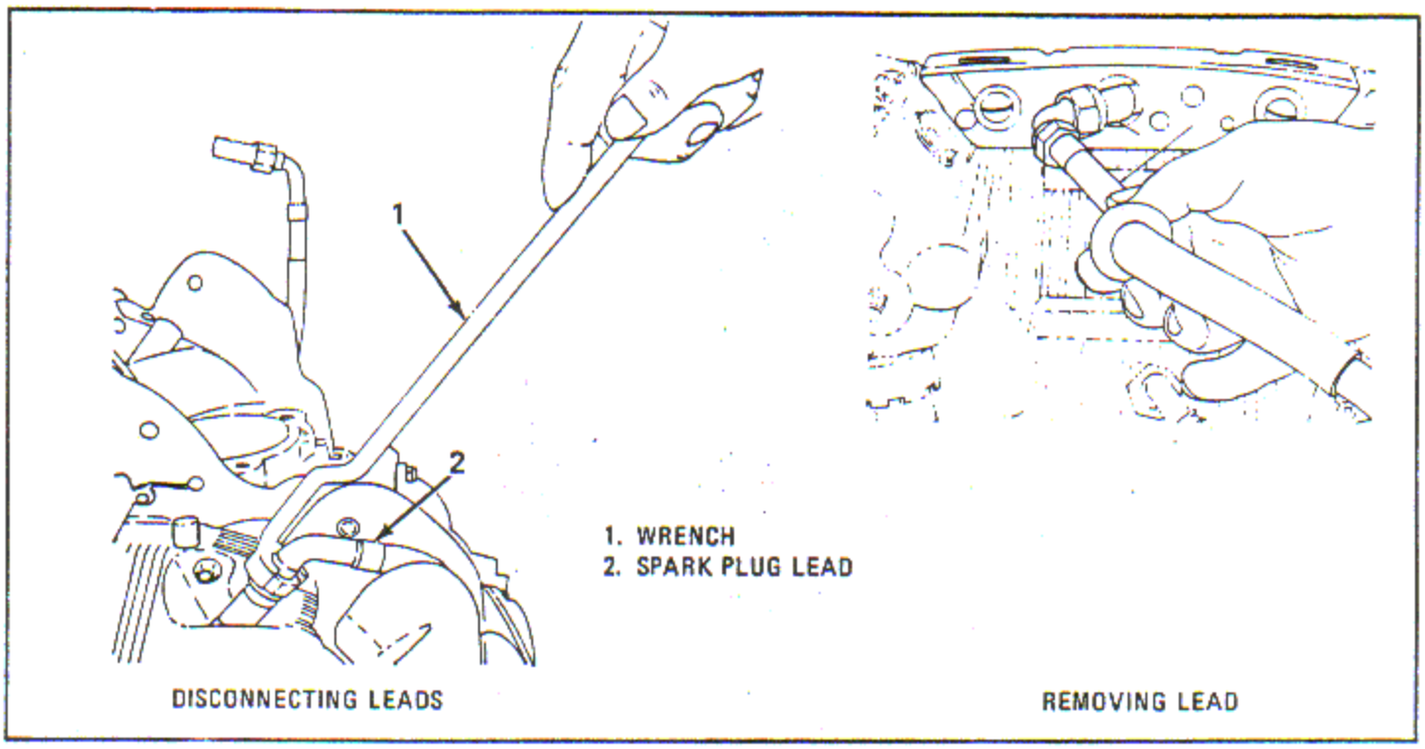

Figure 4-6. Disconnecting Rear Spark Plug Leads, and Removing Lead from Head Deflector

4-17. EXTERNAL HYDRO-OIL SUPPLY FRONT TUBE REMOVAL.

a. Disconnect the hydro-oil supply front tube from the elbow connection in the crankcase front section and remove the tube.

b. The R1820-86A and -86B model engines have an external hydro-oil supply front tube extension. To remove this extension, disconnect the extension from the connector in the crankcase front section and from the elbow connection at the governor mounting pad. Disconnect the two brackets that secure the extension tube to the nose section and remove the extension tube.

4-18. FRONT SPARK PLUG REMOVAL.

4-18A. Remove the front spark plugs in the same manner described for rear spark plug removal in paragraph 4-14. Install contact protectors on the spark plug leads.

4-19. IGNITION CABLE ASSEMBLY REMOVAL.

a. Disconnect the clips that secure the rear spark plug leads to the exhaust push rod housings on all cylinders except cylinder No. 6 and to the intake push rod housing on cylinder No. 6. Loosen the two spanner nuts that join the ignition cable main conduits to the ignition manifold.

b. Break the lock wire and remove the screws that secure the ignition cable manifold brackets to the crankcase front section. The No. 2 and 4 screws on the R1820-86A and -86B model engines are especially designed to support the external hydro-oil supply line extension.

c. Remove the ignition cable assembly as shown in figure 4-7. One man should lift the cable assembly from the engine while another guides the elbows through the space between the engine stand and the supercharger front housing.

4-20. ROCKER BOX COVER REMOVAL. (See tool group 122.)

a. Remove the rocker box cover nuts using wrench.

b. Remove the lock washers using magnetic removing tool. See figure 4-8.

c. Use a container to drain the oil when covers are removed. Remove the covers. Remove and discard gaskets.

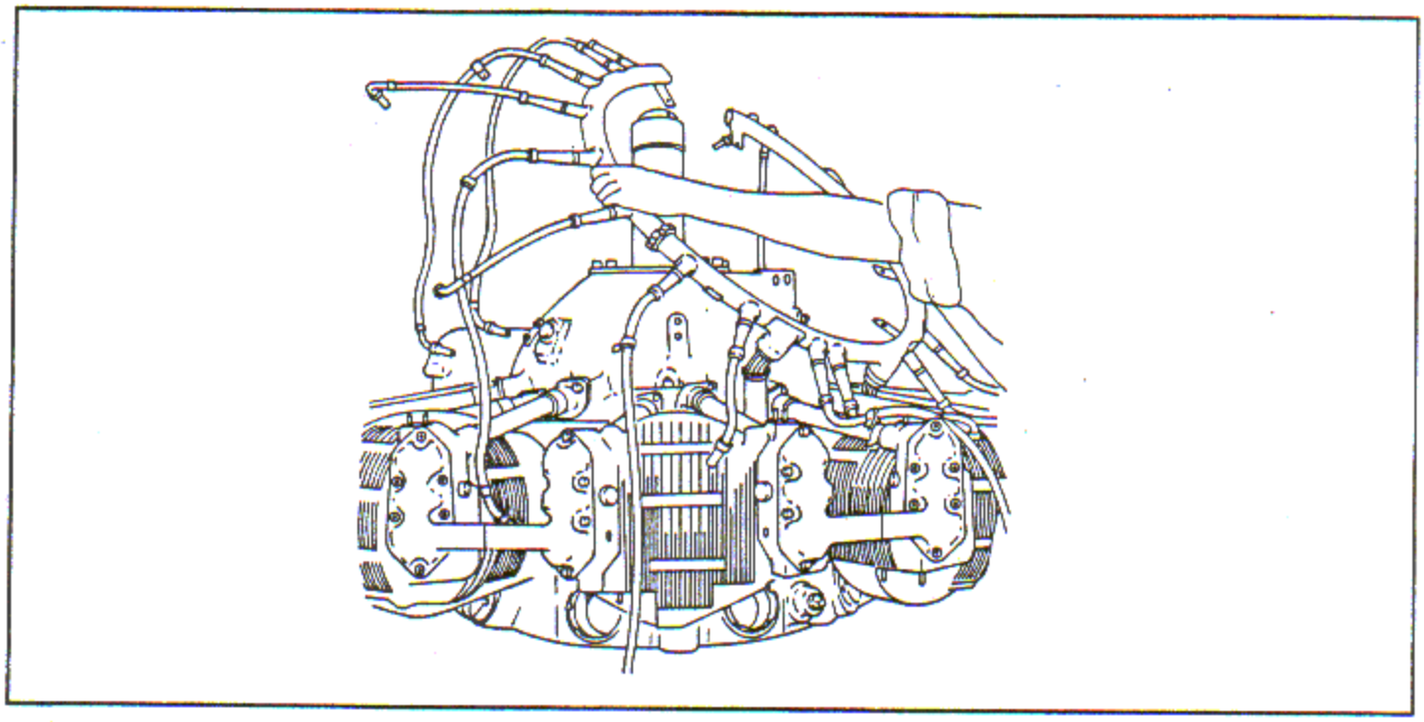

Figure 4-7. Removing Ignition Cable Assembly

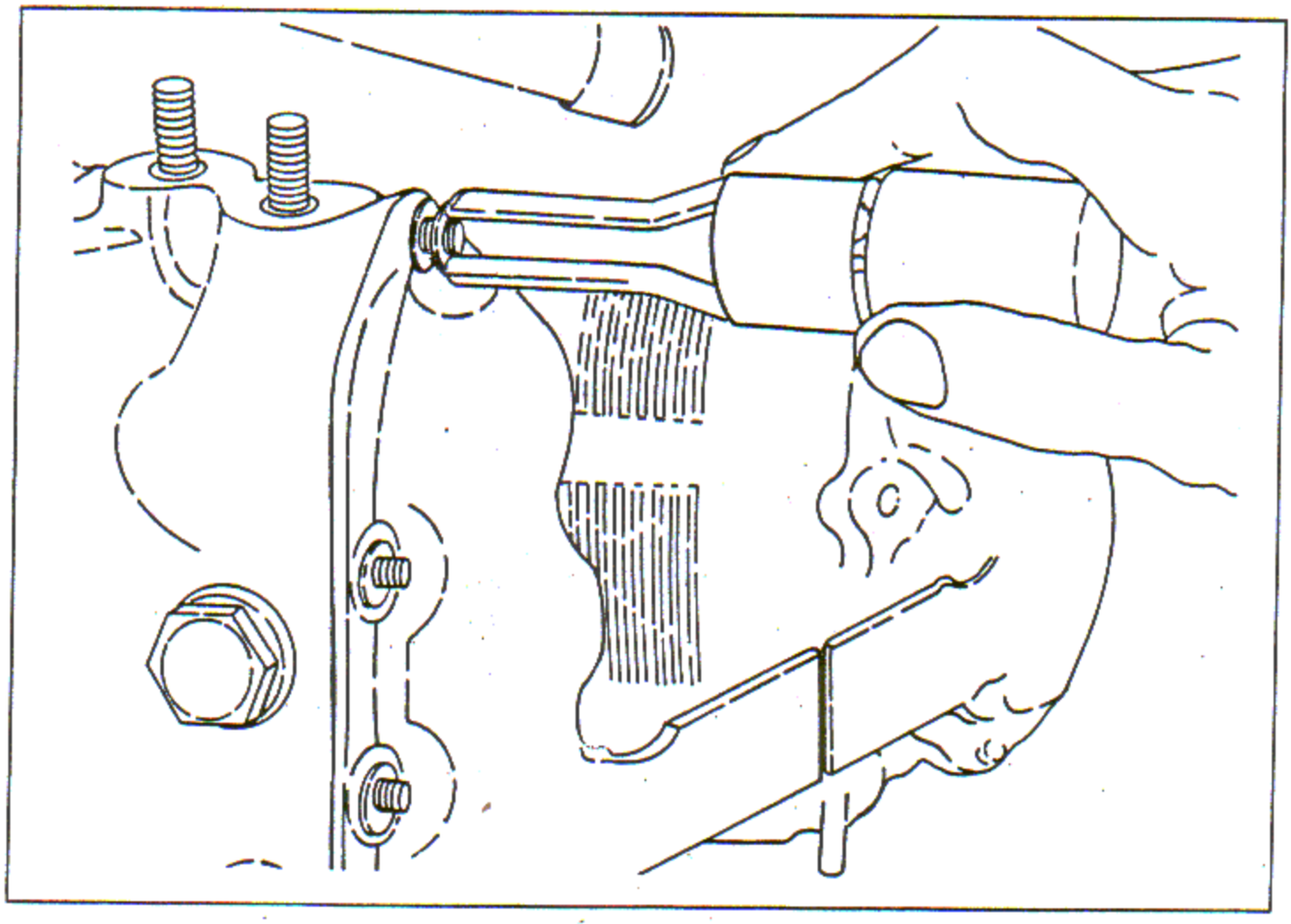

Figure 4-8. Removing Rocker Box Cover Washers

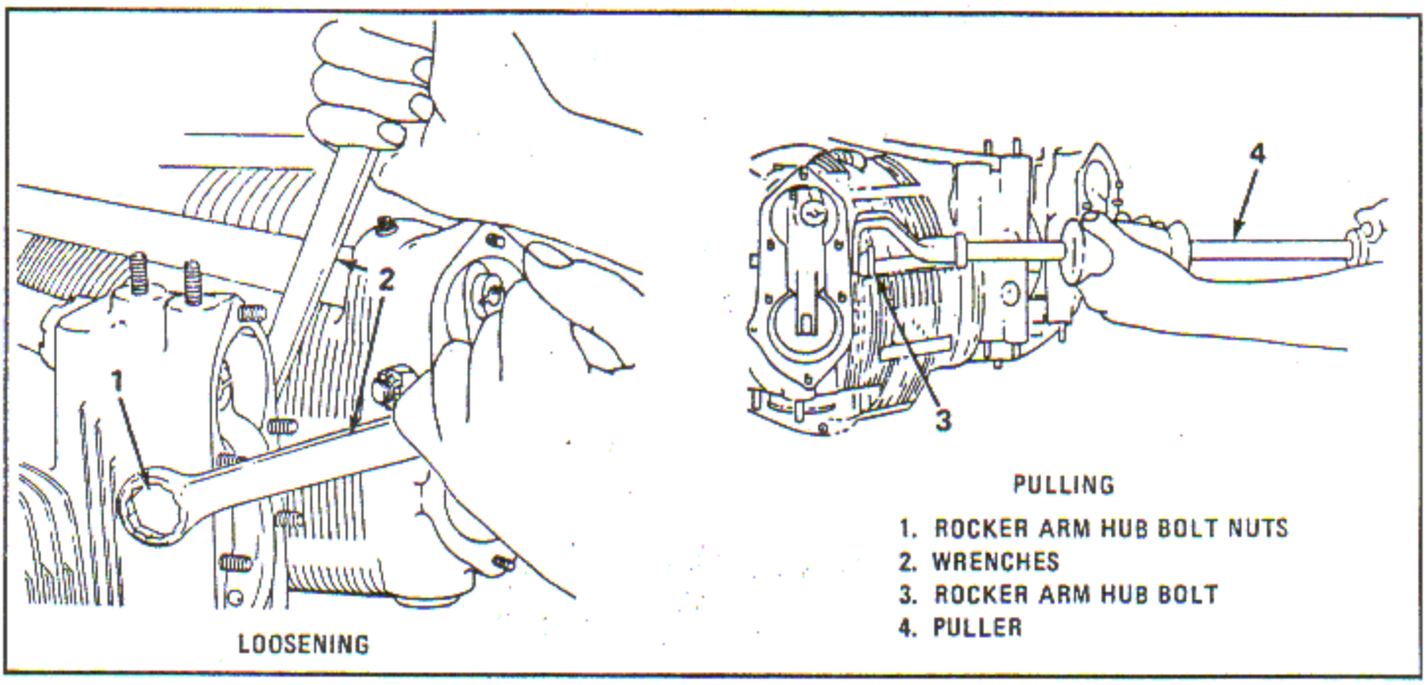

Figure 4-9. Loosening and Pulling Rocker Arm Hub Bolt Nut

4-21. ROCKER ARM AND PUSH ROD REMOVAL. (See tool groups 99 and 116.)

4-21A. Install the propeller shaft thread protector and turning tool. Proceed as follows.

CAUTION

If the valve clearance adjusting screw is found to be loose, prior to loosening the adjusting screw lock screw, the affected valve must be rejected.

a. Loosen the rocker arm adjusting screw lock screws, using wrench. Turn the adjusting screws out half way.

b. Remove the cotter pins from the rocker arm hub bolt nuts (1, figure 4-9).

c. Using two suitable wrenches (2) remove rocker arm hub bolt nuts (1) and spherical washers.

d. Turn the propeller shaft, if necessary, to remove any pressure exerted by the push rod. Push the rocker arm hub bolt (3) out, remove the rocker arm and push rod.

CAUTION

Rocker arms and push rods which are found to be broken, or bent to the extent that the discrepancy is visually discernible, are to be rejected. In such cases, also reject the affected valve.

e. Remove the spherical washer from rocker arm hub bolt (3, figure 4-9) and discard the rubber oil seal rings. Discard the hub bolt if it has the letter "C" stamped on the head, or if it has no letter on the head.

f. If rocker arm hub bolt (3) will not move readily by hand pressure, use puller (4).

4-22. PUSH ROD HOUSING AND ADAPTER REMOVAL. (See tool groups 107, 109 and 110.)

a. Remove the lockwire and loosen the push rod housing connection, lower nut and upper nut with proper wrenches. See figure 4-10.

b. Remove the push rod housing adapter nuts using a suitable tool. Remove the push rod housing adapter washers using magnetic remover.

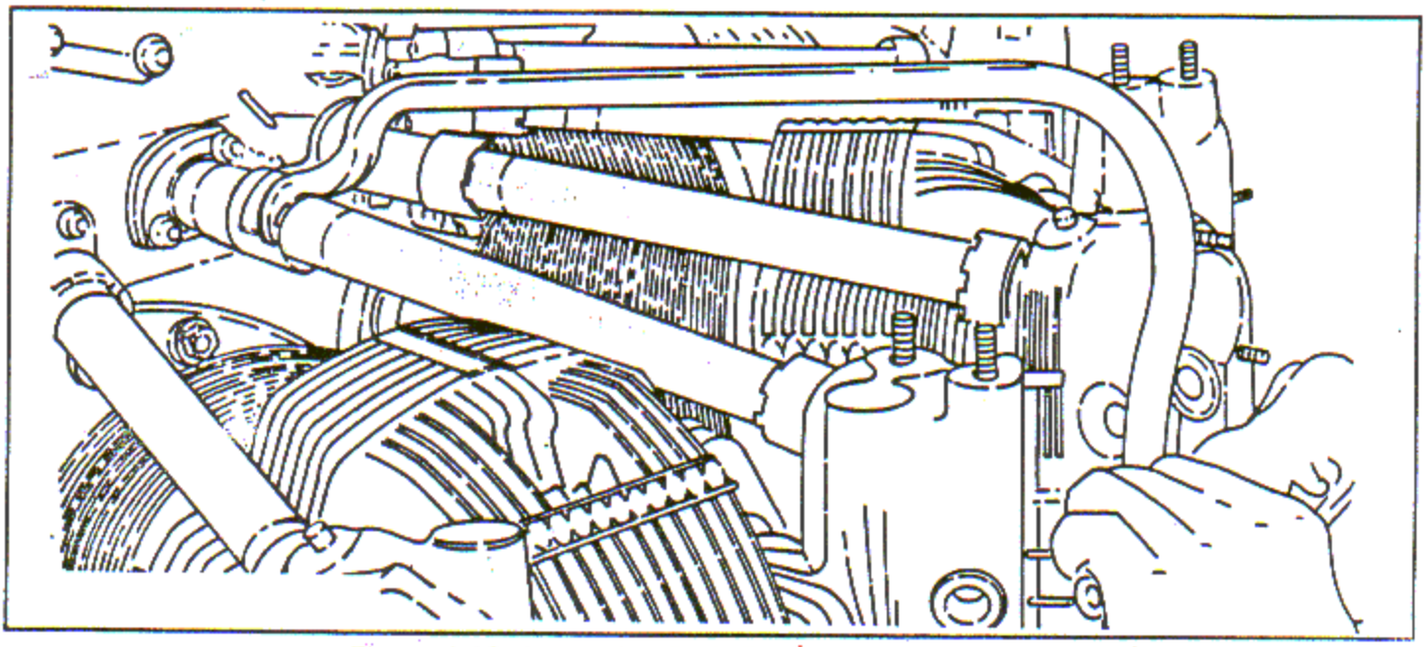

Figure 4-10. Loosening Push Rod Housing Lower Nut

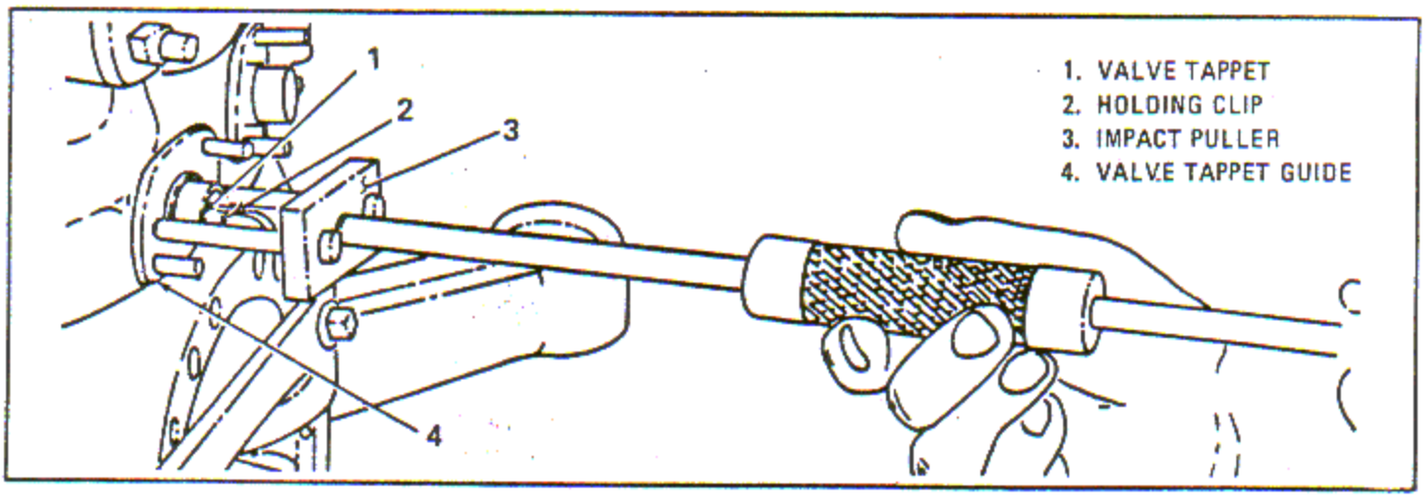

Figure 4-11. Pulling Valve Tappet Guide

c. Grasp the push rod housing and push it into the adapter end. This will clear the push rod housing from the cylinder connection. Remove the push rod housing and adapter.

4-23. VALVE TAPPET SOCKET AND SPRING REMOVAL.

a. Remove the valve tappet ball socket and springs from the valve tappets.

b. Place valve tappet ball sockets in suitable container providing separation for each socket to avoid mutilation of parts.

4-24. VALVE TAPPET AND GUIDE REMOVAL. (See tool group 141.)

CAUTION

To prevent scoring of the tappets and guides, break lock wire and loosen all crankcase front section to main section attaching bolts, prior to removing the tappets and guides.

a. Install holding clip (2, figure 4-11) in the valve tappet (1) to prevent valve tappet roller and pin from falling into engine when assembly is removed.

b. Install screws of impact puller (3) in the valve tappet guide (4).

c. Remove the guide (4, figure 4-11). Remove the holding clip (2) from the valve tappet (1).

d. Slide the valve tappet (1) from the guide (4), remove pin from roller, remove roller and bushing.

CAUTION

If either the valve tappet rollers or bushings are found to be broken or flat, reject the affected valve and the discrepant part.

4-25. FRONT OIL SUMP PUMP REMOVAL. (See tool groups 17, 50 and 129.)

a. Remove the nuts that secure the front oil sump pump to the crankcase front section and to the supercharger front housing. Use wrench to remove the lower nut on the front oil sump pump at the crankcase front section location.

CAUTION

The oil sump scavenge pump drive shaft may become disengaged as the assembly is being removed. Do not allow the shaft to fall.

b. Remove the front oil sump pump. See figure 4-12. Remove the oil sump scavenge pump drive shaft. Discard the gaskets.

c. Install protective covers. Refer to group 17 for the crankcase front section sump pad cover and to group 129 for the supercharger front section sump pad covers.

4-26. CYLINDER AND PISTON REMOVAL. (See tool group 31A.)

a. Remove the lockwire on the cylinders using a wire puller. See figure 4-13. If the cylinder capscrews are secured with locking plates, remove the retaining cotter pin. Remove the lock plate using puller.

b. Break the torque on all capscrews using wrench and wrench A. See figure 4-13.

c. Remove all cylinder hold-down capscrews and spherical washers with the exception of one capscrew at the top of each cylinder mounting pad. Use speed wrench C or pneumatic wrench B.

d. The master rod cylinder (number one cylinder) will be the last to be removed. The piston in any cylinder being removed must be at approximately top center in the cylinder. Remove cylinders in groups of three: No. 3, 4 and 5, No. 6, 7 and 8, No. 9, 2 and 1. Turn the propeller shaft using turning tool to bring the piston to top of each cylinder being removed.

e. Remove the remaining capscrew in the cylinder. Pull the cylinder out of the crankcase and off the piston.

NOTE

Scrap all removed cylinder hold-down capscrews.

f. Remove the piston pin plug. Loose fit piston pin plugs may be removed using a suitable fiber drift inserted through the piston pin bore. Tight fit piston pin plugs may be removed using a tool locally fabricated of brass as shown in figure 4-14. Hold the piston so that it is firmly centered in relation to the articulated rod, and using the tool as a drift, remove the piston pin plug.

g. Remove the piston pin from piston using puller. See figure 2-4. Engage the jaws of puller over the lip of the piston pin. Ensure the jaws are securely engaged. Attach a suitable air gun to a compressed air source. Place the square drive on the air gun in the adapter at the end of the puller screw. Remove the piston pin from the piston.

NOTE

In the event it is not necessary to use puller to remove the piston pin, the plug may be disassembled from the pin using an arbor press and the tool shown in figure 4-14. Use the shoulder on the neck to support the pin.

h. Install rubber protector on articulating rods upon removal of piston.

i. Install a plate with two cylinder capscrews to No. 1 cylinder pad to prevent master rod striking the crankcase. See figure 4-15.

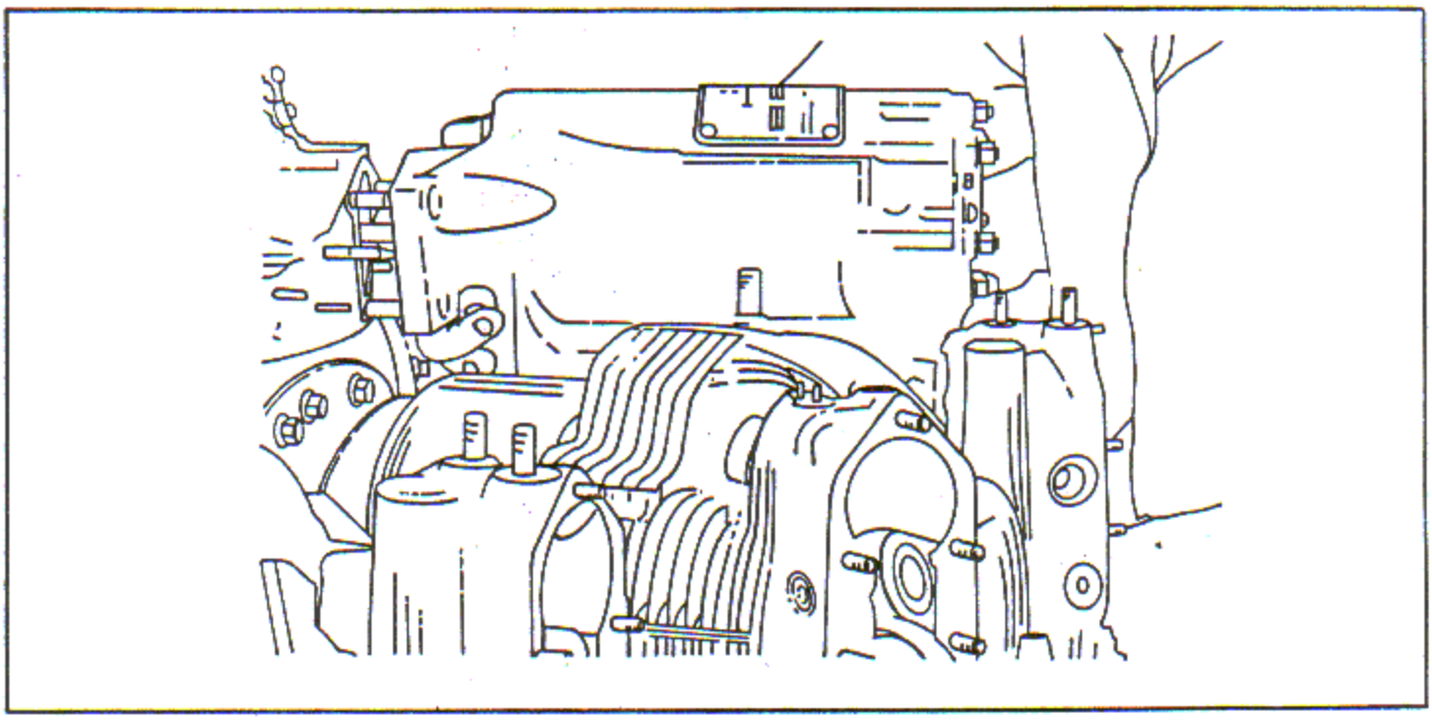

Figure 4-12. Removing Front Oil Sump Pump

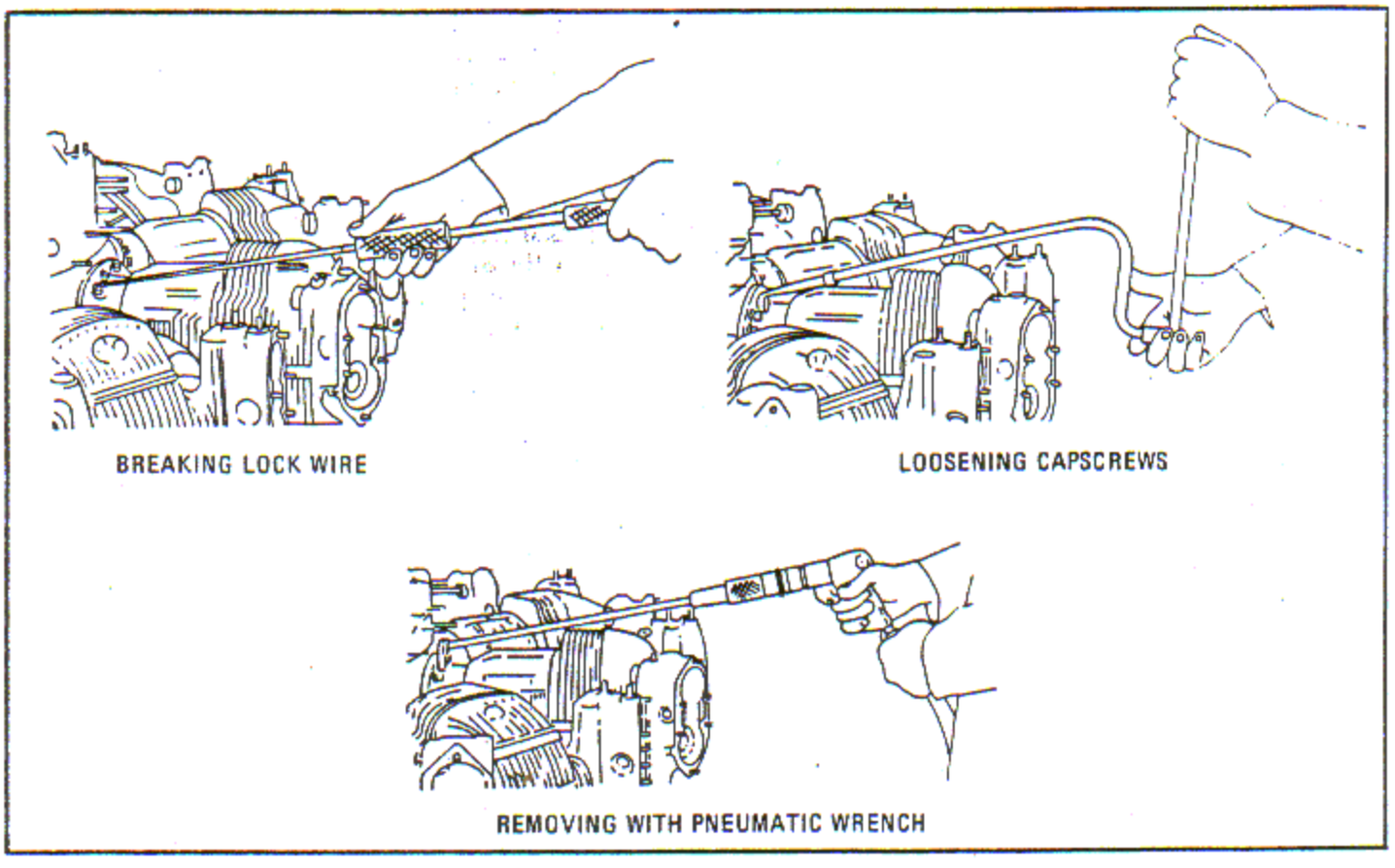

Figure 4-13. Removing Cylinder Capscrews

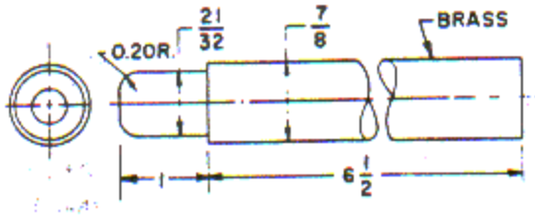

Figure 4-14. Piston Pin Plug Removing Tool

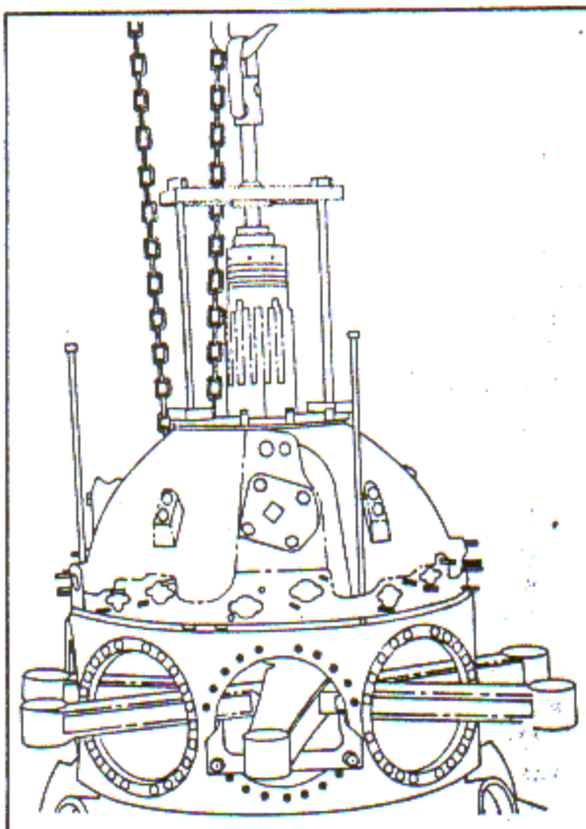

BREAKING SEAL

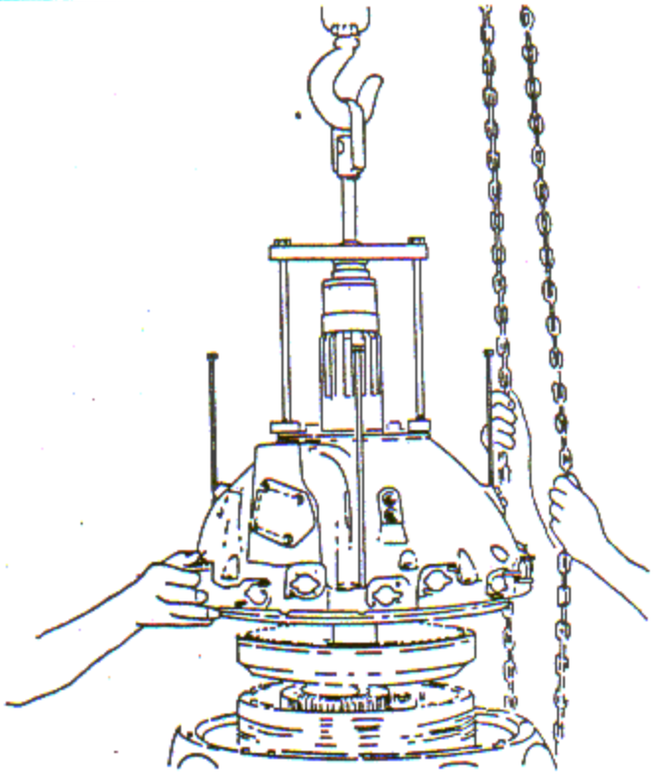

RAISING FROM ENGINE

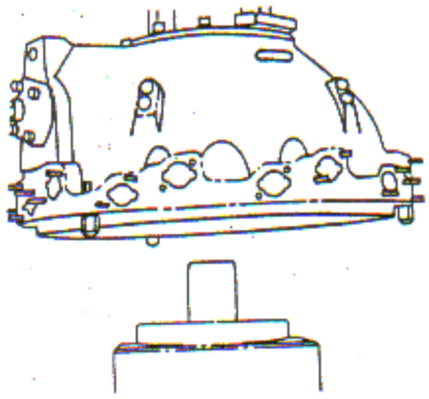

LOWERING ONTO STAND

Figure 4-15. Removing Crankcase Front Section from Engine and Placing in Disassembly Stand

4-27. CRANKCASE FRONT SECTION REMOVAL. (See tool group 17.)

a. Remove the remaining crankcase front section to crankcase front main section attaching bolts and washers. Remove the slotted plugs from the three puller holes in the crankcase front section.

b. Remove the cotter pins and remove two crankcase front section flange bolt slotted nuts from each side of the flange.

c. Install three pullers in the crankcase front section at the puller screw locations. Install puller and hoist to the propeller shaft and crankcase front section flange bolts. See figure 4-15.

d. Provide suitable chain hoist. Break the seal in the parting surfaces of the crankcase front section and front main section by drawing on the chain hoist attached to puller and hoist, and tightening the three puller screws on the crankcase front section.

e. Raise the crankcase front section clear of the crankshaft. Guide the front section to prevent damage to surfaces.

f. Install suitable protectors on crankcase front section attaching flange and lower the front section onto a stand.

4-28. REDUCTION DRIVE GEAR REMOVAL. (See tool groups 112 and 113.)

a. Extract the cotter pin from the reduction drive gear lock nut screw. Remove the screw. Install wrench (1, figure 4-16) on reduction drive gear nut. Remove the master rod protective guide temporarily.

b. Install a fiber drift in master rod piston pin bushing. Rotate crankshaft counterclockwise until fiber drift rests against the crankcase.

c. Using suitable hammer, loosen the reduction driving gear nut. Remove the nut. Remove fiber drift from master rod, reinstall master rod protective guide.

d. Install the hydraulic puller to pull the reduction drive gear (4, figure 4-17).

e. Install adapter to the reduction gear (4) with the short screws.

f. Install multi-purpose adapter (3), in the end of the crankshaft.

g. Attach multi-purpose plate (2), to jack (1), and attach plug (8), to the end of the jack.

h. Place the jack (1) on the adapter (3) in the crankshaft. Attach multi-purpose plate (2) to the reduction gear (4), with long screws (7).

i. Assembly hose (6), and pump (5), to the jack (1). Remove the reduction drive gear (4) by building hydraulic pressure using the jack handle.

4-29. CRANKCASE FRONT MAIN SECTION REMOVAL. (See tool groups 15 and 19.)

a. Extract the cotter pins from the crankcase front to rear main sections attaching bolts. Use one wrench A or B to hold the bolt, and one wrench A or B to loosen the nuts. See figure 4-18. Remove the nuts, washers and bolts.

CAUTION

Be careful not to drop the reduction drive gear spacer and front main bearing outer race, rollers and cage.

b. Install sling on the crankcase front main section; attach a chain hoist and draw taut. See figure 4-19. Hoist the crankcase front main section clear of the crankshaft.

c. If the reduction drive gear spacer and front main bearing remain in the case, remove them. Remove the rings from the spacer.

d. Remove the packing between the front and rear main sections and install three protectors in selected front main to rear main section attaching bolt holes. See figure 4-20. Lower to a work bench and remove the chain hoist and sling.

4-30. CRANKSHAFT ASSEMBLY REMOVAL. (See tool groups 23 and 27.)

4-30A. Remove the crankshaft front main bearing inner race, using hydraulic puller consisting of hose (8, figure 4-21), pump (6), ring (7), bolts (4), jack (1), plug (3) and adapter (5) as follows.

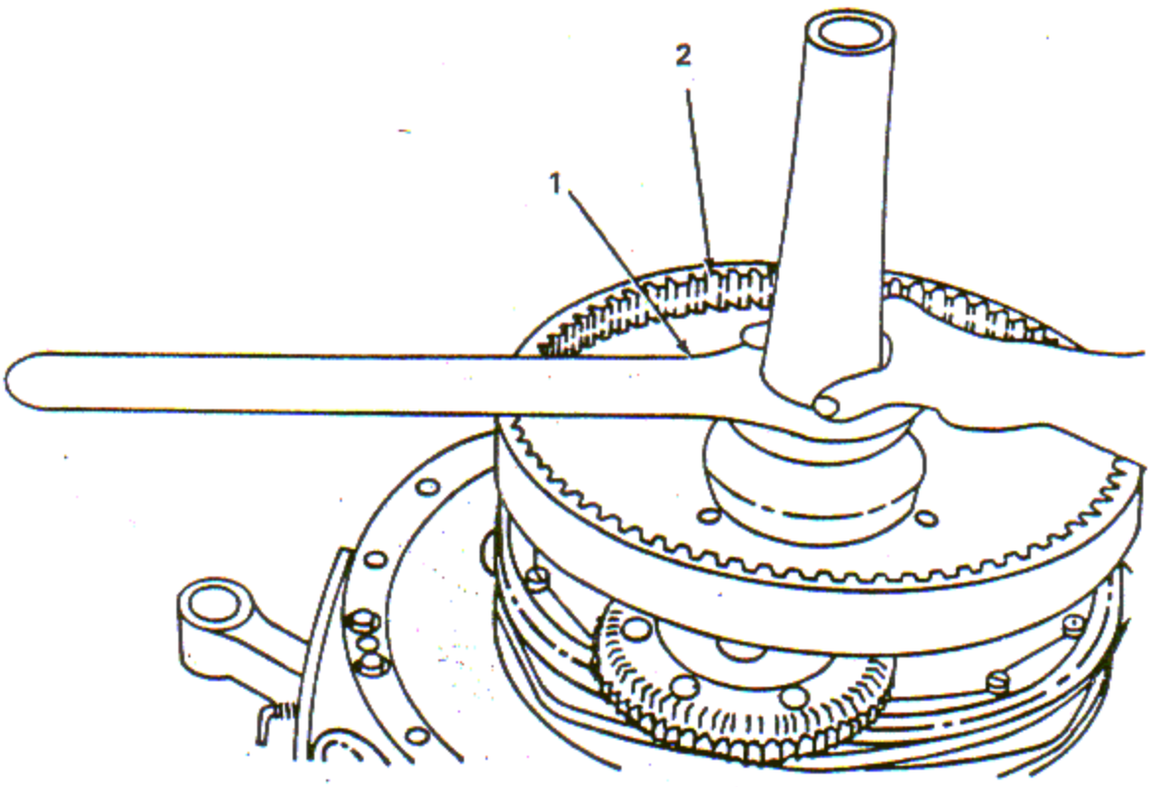

1. WRENCH
2. REDUCTION DRIVING GEAR

Figure 4-16. Loosening Reduction Driving Gear Nut

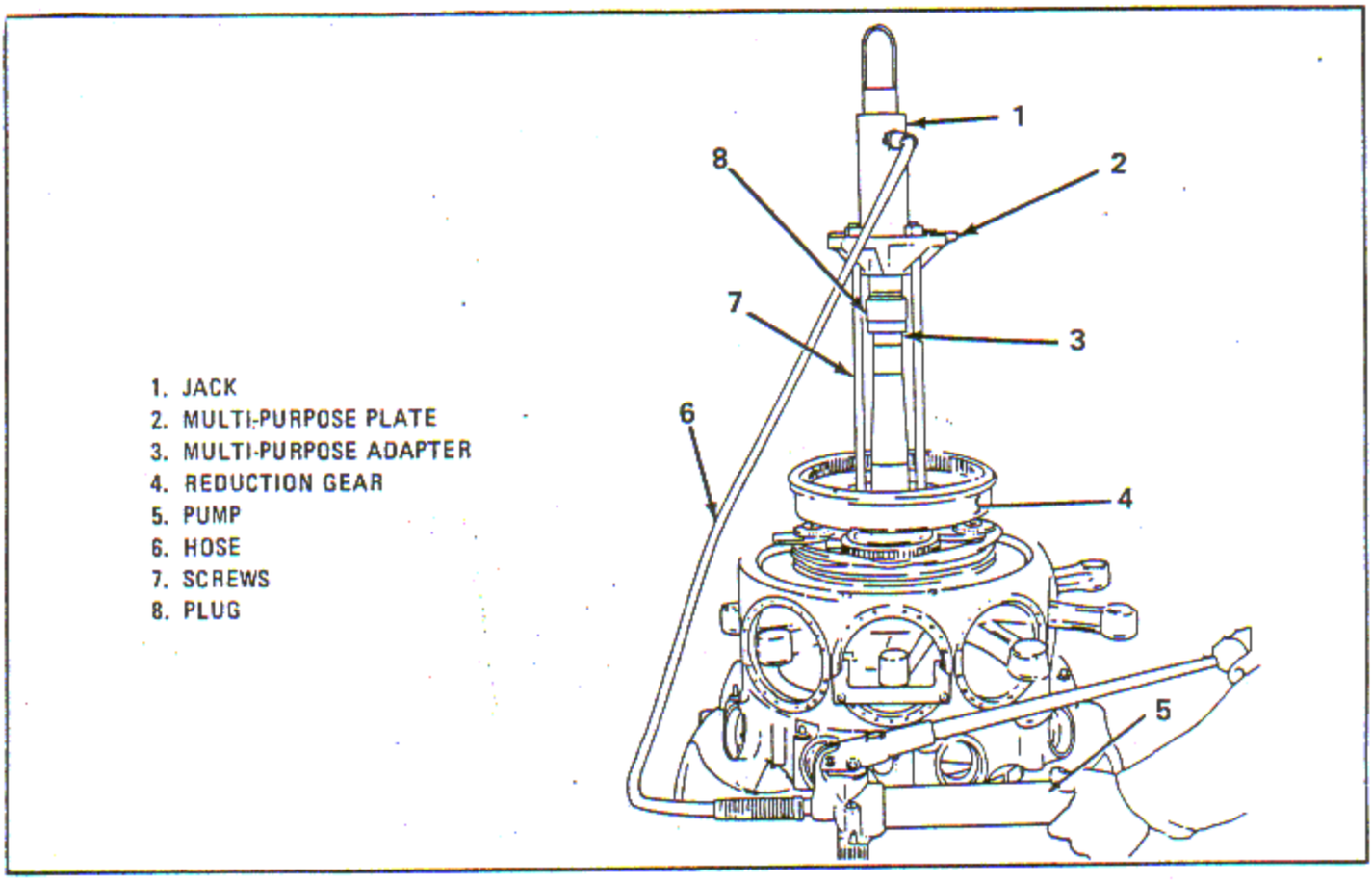

Figure 4-17. Pulling Reduction Drive Gear

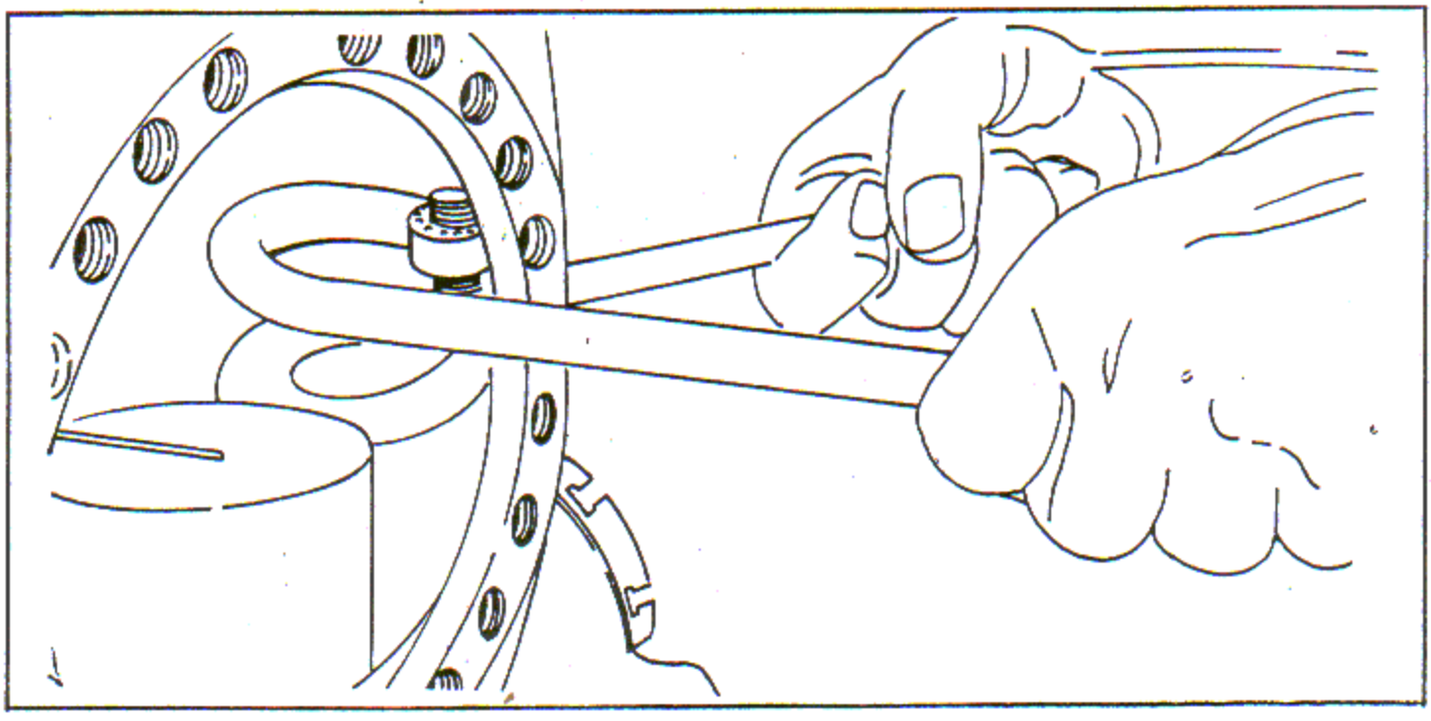

Figure 4-18. Loosening Crankcase Main Section Bolt Nuts

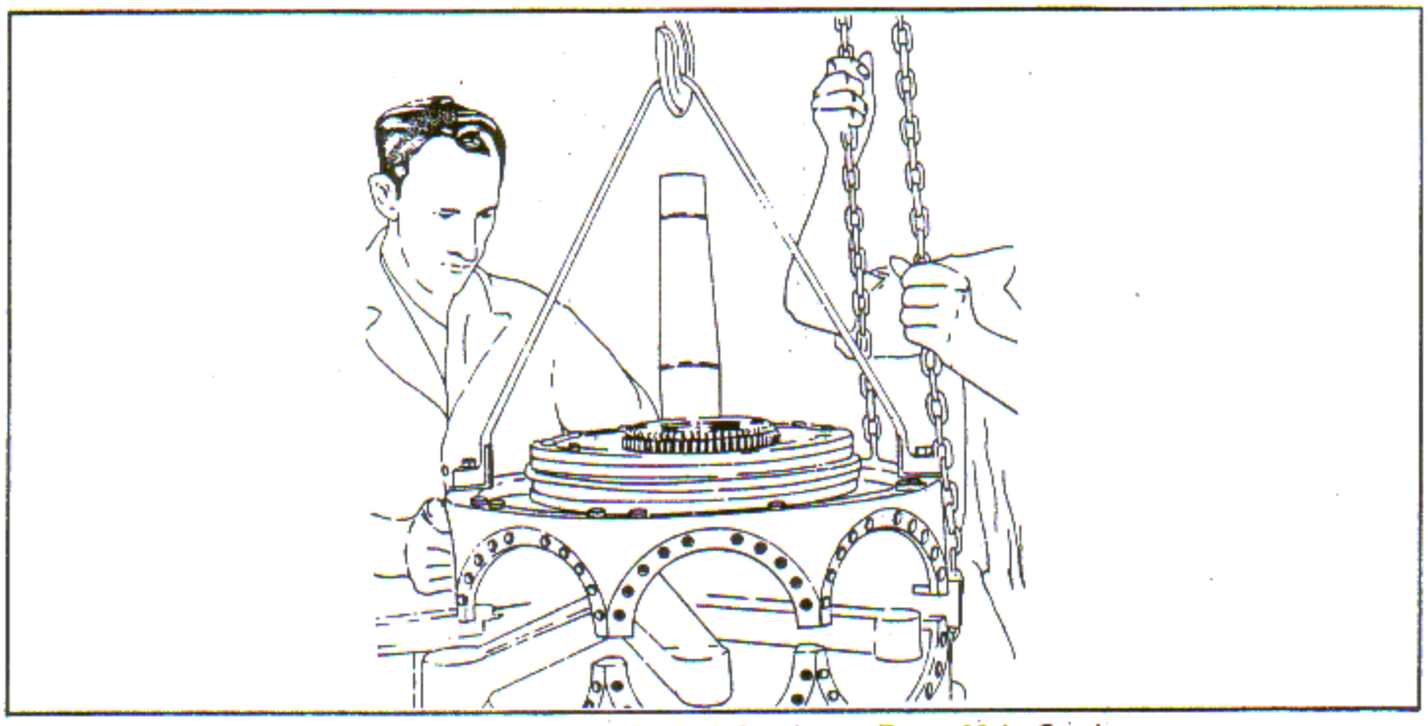

Figure 4-19. Removing Typical Crankcase Front Main Section

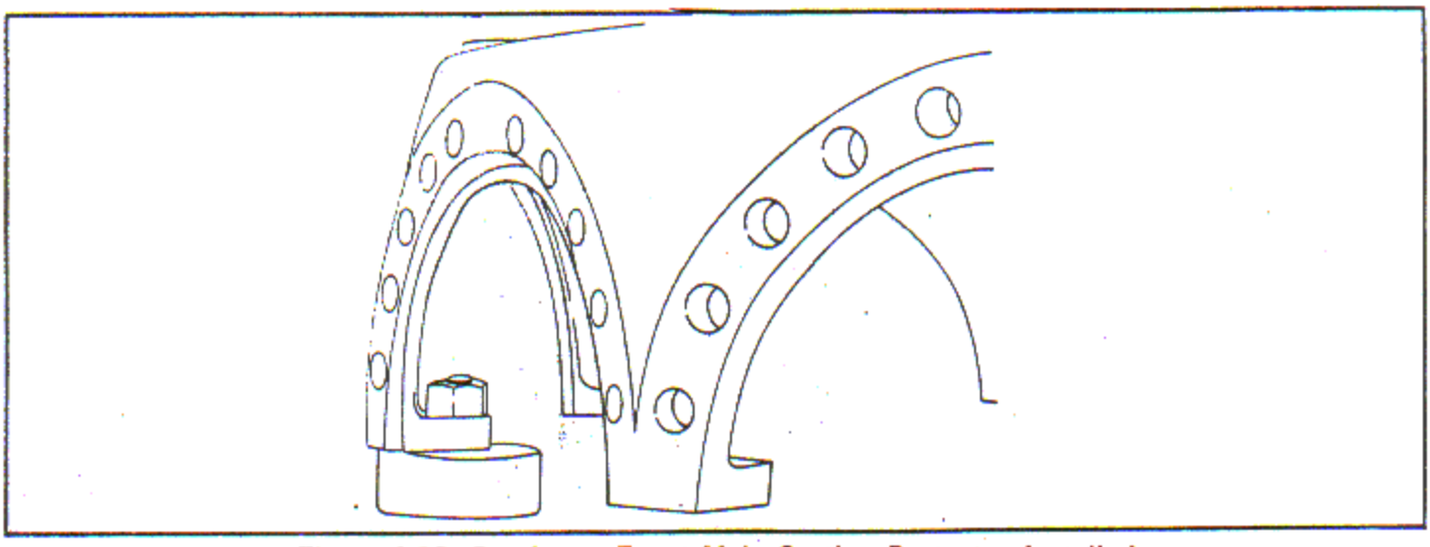

Figure 4-20. Crankcase Front Main Section Protector Installed

a. Install the two segments of adapter (5, figure 4-21), with the lip under the crankshaft front main bearing inner race. Lock the adapter in place by installing the ring (7), all the way down and around the segments.

b. Put the plug (3), in the end of the crankshaft. Screw the jack (1), to the plate (2), and insert the jack into the plug.

c. Attach four bolts (4), through the plate (2), to the adapter (5).

d. Attach the pump (6), and jack (1), and pull the bearing inner race as shown.

e. Install hoist eye B (2, figure 4-22), on the crankshaft (3), and attach a chain hoist and raise the crankshaft assembly clear of the engine stand.

f. Install hoist eye A (4), on the master rod (5), and attach a chain hoist (1). One man should raise the master rod while another lowers the crankshaft (3). When the crankshaft is in flight position, remove the crankshaft eye.

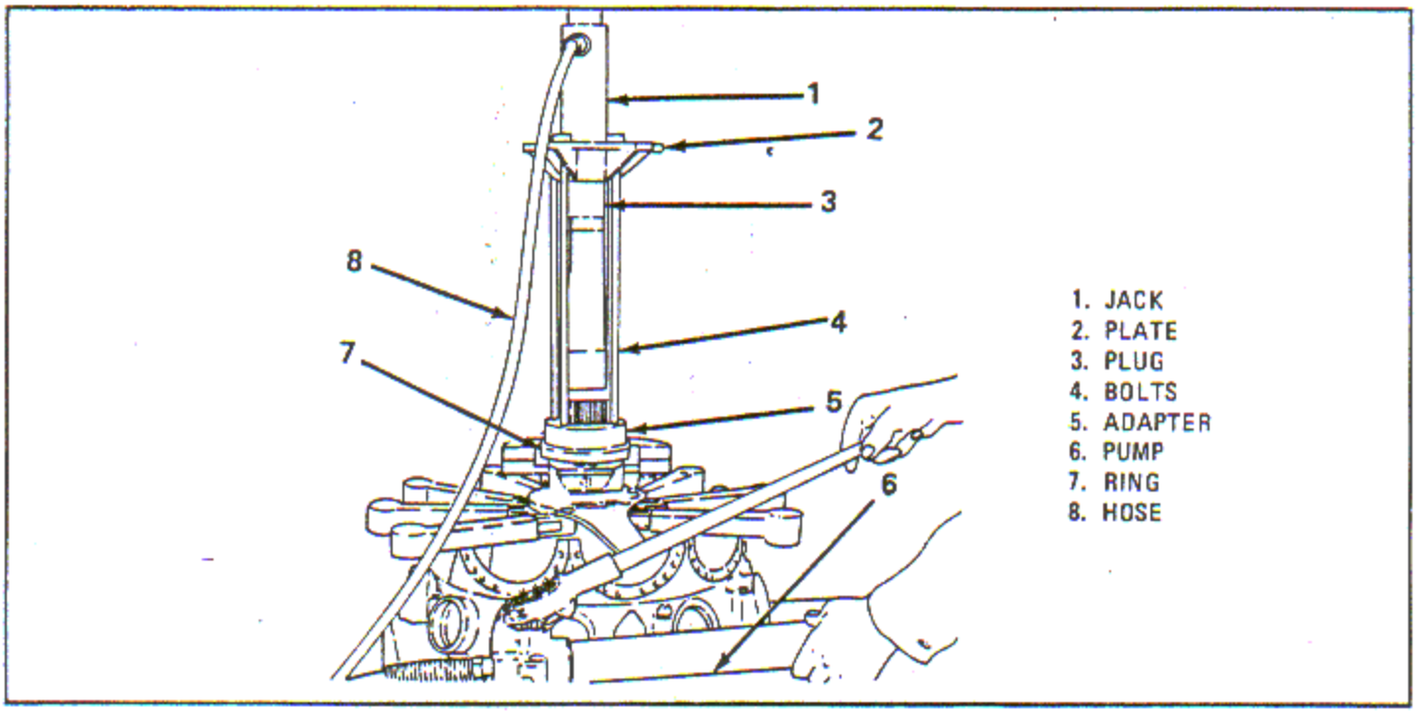

Figure 4-21. Pulling Crankshaft Front Main Bearing Inner Race

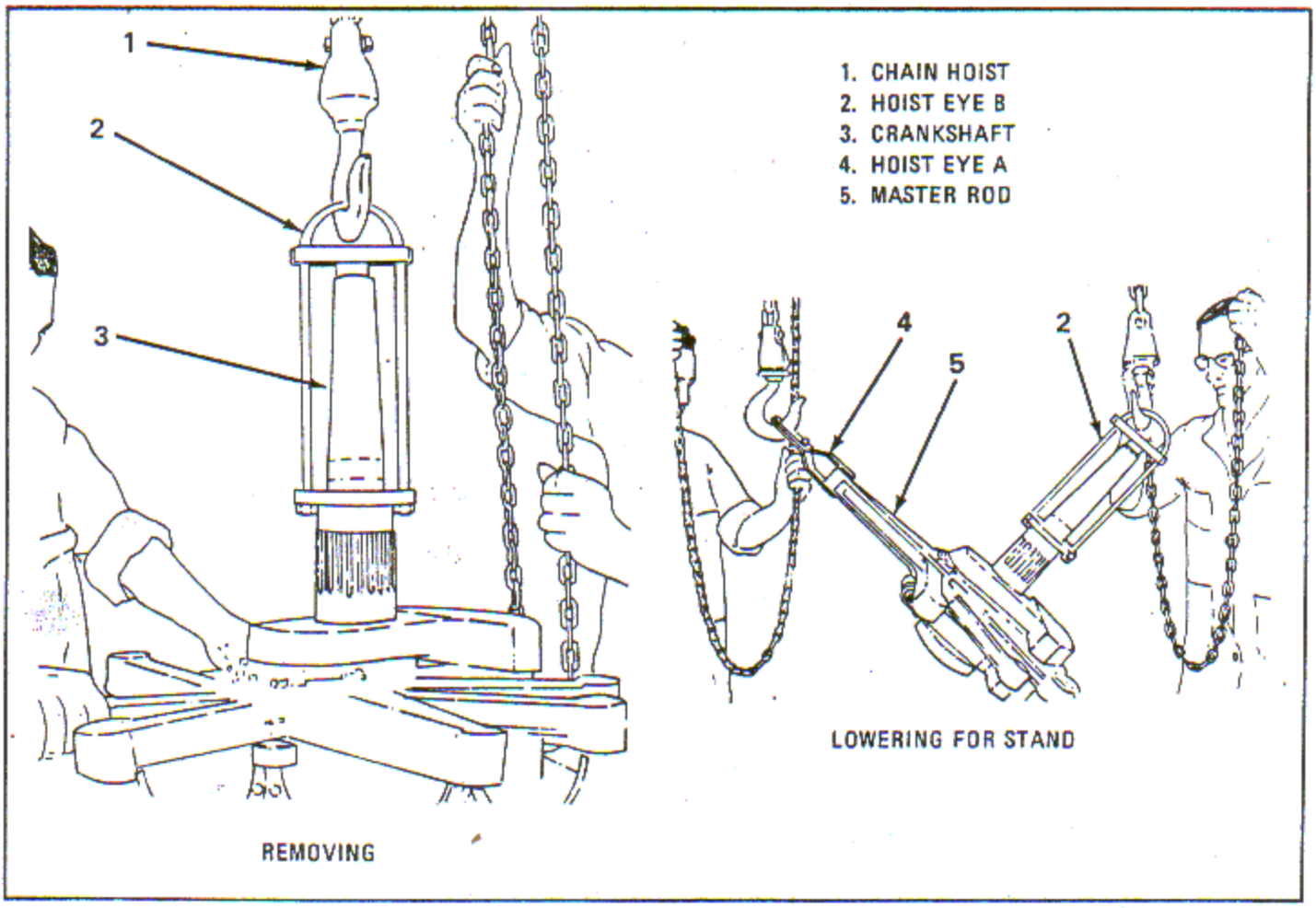

Figure 4-22. Removing and Lowering Crankshaft Assembly to Position for Disassembly Stand

g. Install two bushings (2, figure 4-23), which are details of the crankshaft stand (3) on the crankshaft front end. Install the crankshaft assembly in stand. Secure the two clamps (1) over the crankshaft front end.

h. Raise the bronze knob on the rear platform of the stand (3) up under rear counterweight. When the crankshaft assembly is installed in the stand remove the chain hoist and the eye from the master rod (4). Tie the articulating rods (5), together on both sides of the master rod.

4-31. CRANKCASE REAR MAIN SECTION REMOVAL.

a. Remove the supercharger front housing to crankcase rear main section attaching bolts and remove the crankcase rear main section.

4-32. SUPERCHARGER FRONT HOUSING REMOVAL.

a. Remove the bolts that secure the supercharger front housing to the engine stand and remove the supercharger front housing.

4-33. CRANKSHAFT REAR END REMOVAL. (See tool groups 22, 29 and 31.)

a. Remove the crankshaft rear main bearing nut lock screw and tablock washer. Unscrew the nut (6, figure 4-23) using proper wrench (2). Remove the rear main bearing outer race, rollers and cage.

b. Remove the cotter pin from the crankcheek screw (1, figure 4-24). Using proper wrench (2) and extension (3), remove the screw and washer.

c. Insert plug (4), in the unthreaded end of crankcheek screw hole and retain by inserting stop (5), in the slot. Apply light coat of anti-seize compound, Specification JAN-A-669, on the threads of screw (7), and insert it into the threaded end of the crankcheek screw hole.

d. Using suitable bar (6), apply just enough torque to loosen the clamp on the crankpin. Remove the crankshaft rear end. Remove the master rod spacer.

e. Check and remove any nicks or burrs on the crankpin to prevent mutilating the master rod bearing during its removal.

f. Remove the master rod and articulating rod assembly (3, figure 4-25).

4-34. CRANKSHAFT FRONT END DISASSEMBLY. (See tool groups 14, 24 and 25.)

a. Remove the crankshaft front end from the crankshaft stand. Remove the crankshaft piston oil check valve and lock washer from the top of the crankshaft.

b. Disassemble the valve by drilling out the rivet. Discard the stop, spring and ball at each overhaul.

c. Insert puller into the head of the crankpin oil sludge retaining plug (8, figure 4-25) and remove the plug from the crankpin.

d. Remove the crankshaft breather substituting plug retaining screw and lock washer. Remove the plug (2, figure 4-26) using puller (1).

e. Straighten the counterweight attaching bolt caps which are bent between lugs on the counterweight attaching bolt and nut and into grooves in the counterweight (3). Loosen the counterweight bolt attaching nuts using wrench A (4), adapter A (5), and adapter B (7). Adapter A is installed on the head of bolt; adapter B is installed on the nut. The C-clamp lug wrench A (8), retains the adapters in place. Use an open end wrench (6) on hex of adapter B. Remove the nuts. Remove the bolts and washers. Remove one side of the counterweight, then the other side with the counterweight pins.

4-35. CRANKSHAFT REAR END DISASSEMBLY. (See tool groups 3 and 30.)

CAUTION

Ensure the accessory drive and starter shaft coupling is not pinned in the crankcheek.

a. Remove the starter coupling only if damaged, worn, loose or contaminants are trapped in the

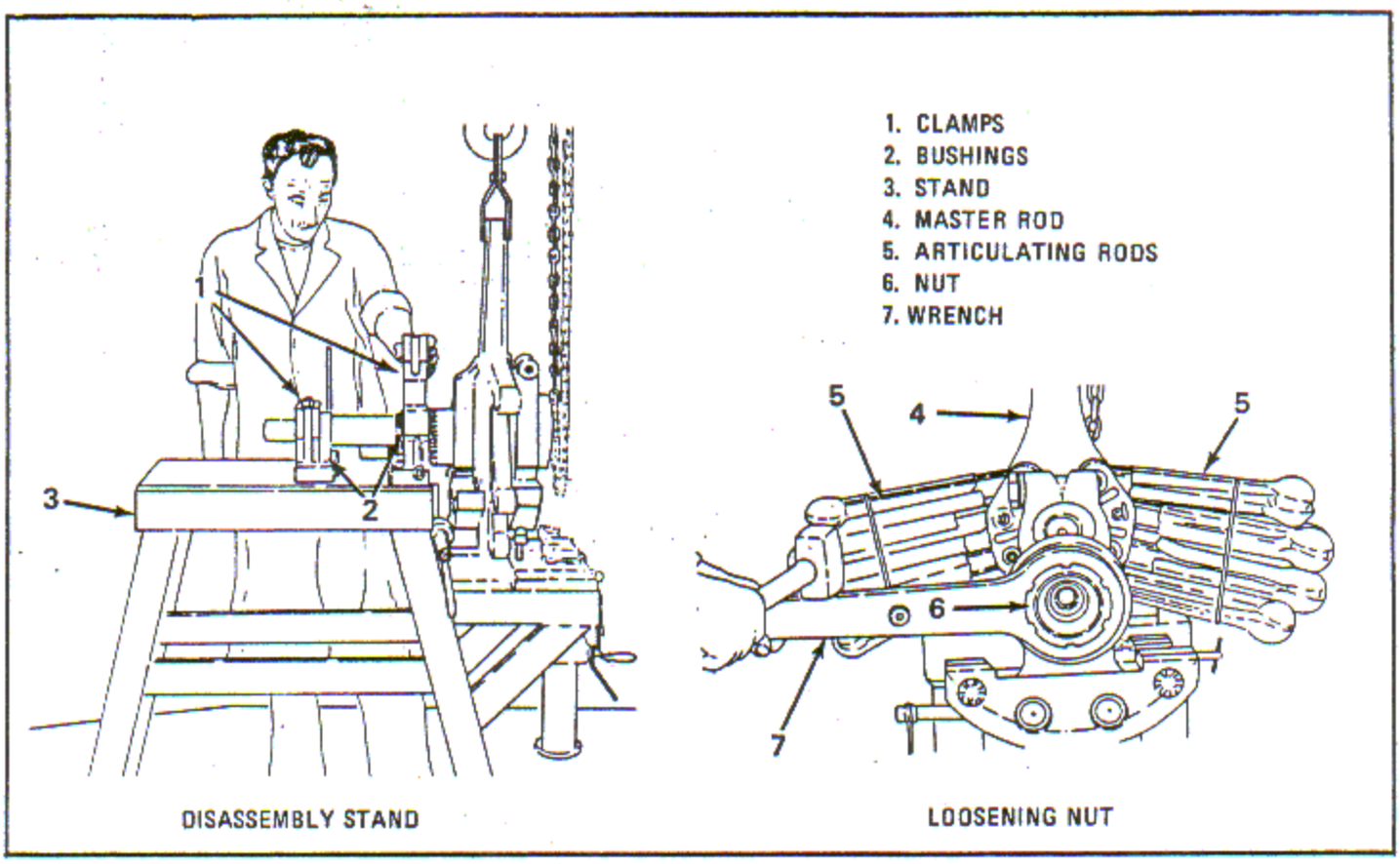

Figure 4-23. Clamping Crankshaft into Disassembly Stand and Loosening Rear Main Bearing Nut

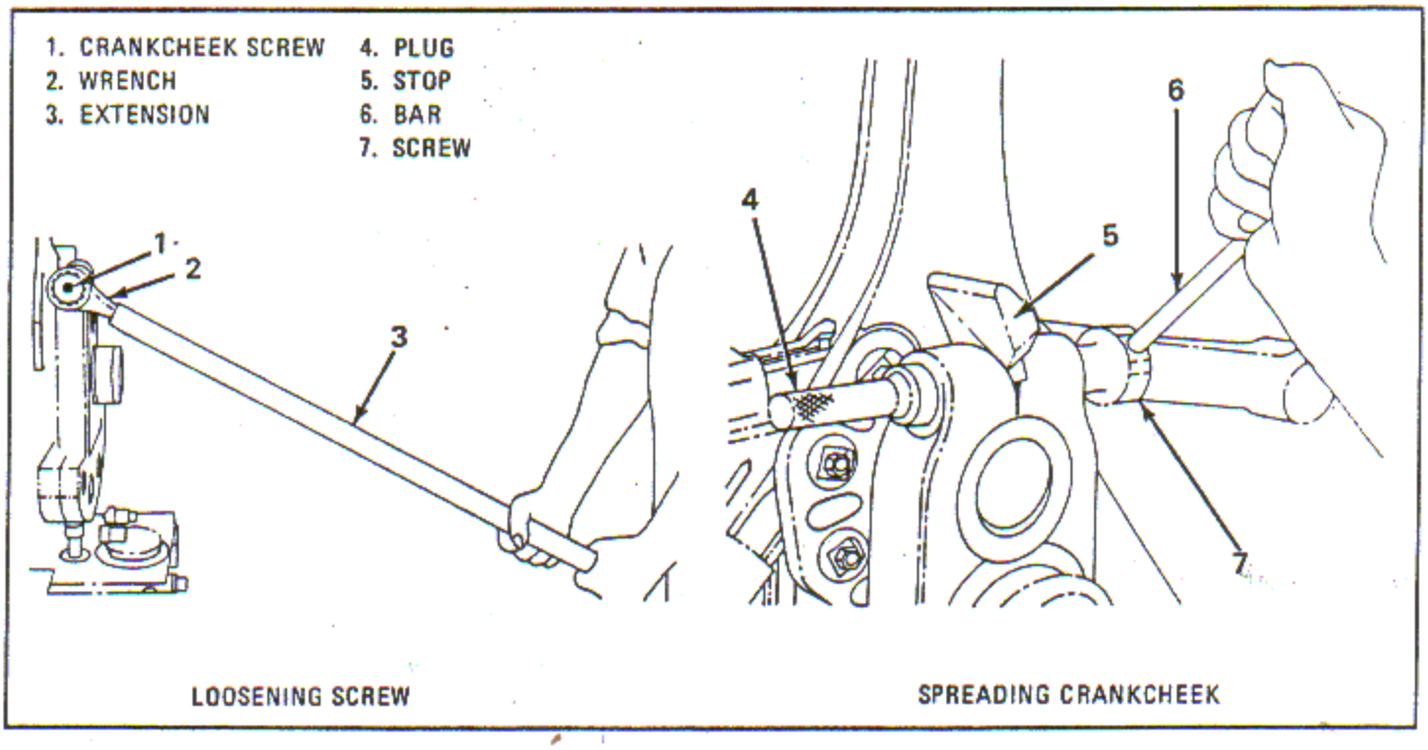

Figure 4-24. Loosening Crankcheek Screw and Spreading Crankcheek

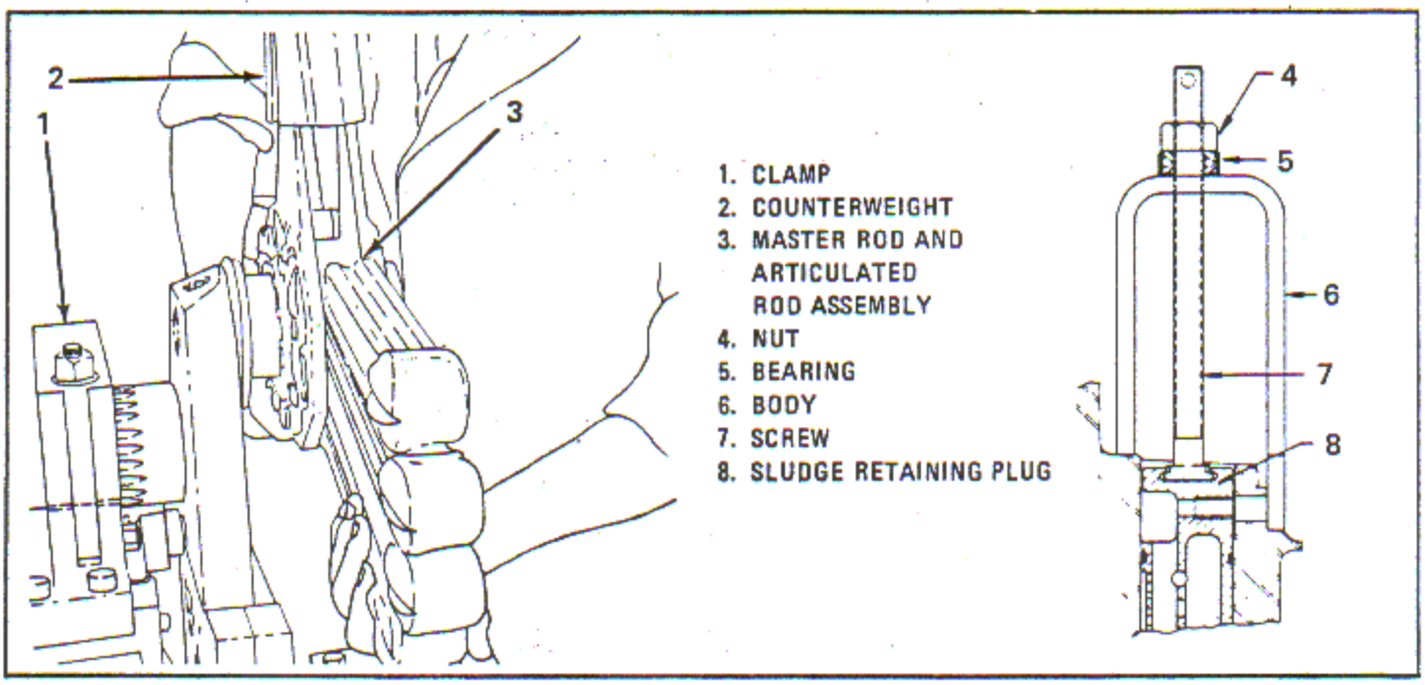

Figure 4-25. Removing Master and Articulated Rods Assembly and Pulling Crankpin Oil Sludge Retaining Plug

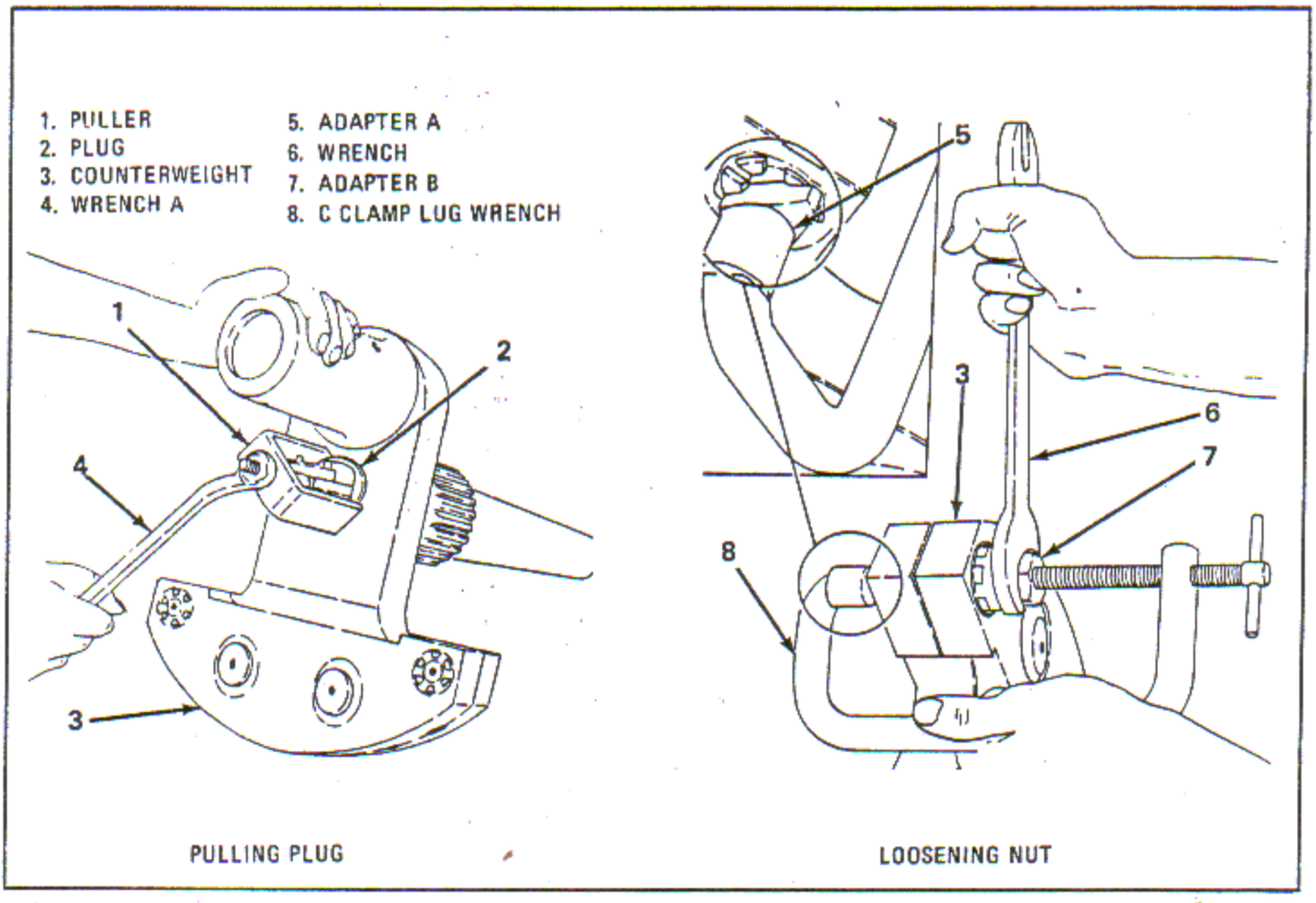

Figure 4-26. Pulling Crankshaft Breather Substituting Plug and Loosening Counterweight Bolt Nut

crankshaft recess. The crankshaft splines must be inspected for acceptability. Remove the accessory drive and starter shaft coupling circlet. Remove the coupling using puller. Engage the jaws of the puller by turning the knurled knob in a clockwise direction. See figure 2-5. Using hand tools or a suitable hydraulic puller, pull the accessory drive and starter shaft coupling.

b. Remove the rear counterweight in the same manner described for the front counterweight.

c. Remove the crankshaft rear main bearing inner race using puller assembly consisting of hose (2, figure 4-27), pump (4), ring (5), bolts (7), jack (1), adapter (6), plug (3) and plate (8) as described in steps d through g.

d. Install the two segments of the adapter (6), with the lip under the crankshaft rear main bearing race. Lock the adapter in place by installing the ring (5), all the way down and around the segments.

e. Install the plug (3), in the end of the crankshaft. Attach the jack (1), into the plate (8), and insert the jack into the plug.

f. Attach four bolts (7), through the plate (8), to the adapter (6).

g. Using the pump (4), and hose (2), pull the bearing inner race.

4-36. ARTICULATED RODS DISASSEMBLY. (See tool group 78.)

a. Remove the master rod oil seal disc.

CAUTION

Electro-etching or metal stamping to identify rod location is prohibited.

b. Straighten the knuckle pin tab locks. Remove the knuckle pin bolts, nuts and locks. Remove the locking plate with puller. See figure 4-28.

c. Withdraw the master rod bearing, exerting a steady pull outward. Do not rotate bearing during removal. Shrink bearings with dry ice wrapped in a soft cloth, if necessary. Remove the knuckle pins and articulated rods.

4-37. CRANKCASE FRONT MAIN SECTION DISASSEMBLY (R1820-76 SERIES, -86A, -86B.) (See tool groups 10 and 94.)

a. Remove the cotter pin from the cam intermediate drive gear and pinion retaining bolt nut. Hold the head of the bolt with immobilizer (3, figure 4-29) and loosen the bolt nut. Remove the nut and remove the cam intermediate drive gear (2) and governor driving gear and governor driveing gear assembly.

CAUTION

Insert a strip of soft metal under each of the three puller screw holes to prevent damage to the crankcase.

b. Remove the cam and oil sump scavenge pump drive support attaching screws. Pull the cam and support using pullers (4). The cam intermediate drive gear pinion and bolt will remain on the crankcase. Remove any loose dowels. Remove the pullers.

4-38. CRANKCASE FRONT MAIN SECTION DISASSEMBLY (R1820-80 SERIES). (See tool group 10.)

a. Remove the cotter pins from the balanceweight gear (2, figure 4-30) and balanceweight drive gear retaining nuts (1). Using a suitable wrench, remove the retaining nuts.

NOTE

The retaining nuts have a left hand thread.

b. Lift off the gears and bushings.

c. Break the lock wire and remove the oil sump scavenge pump drive gear support attaching screws. Remove the gear and support. Discard the gasket.

d. Remove the cam assembly to crankcase attaching screws.

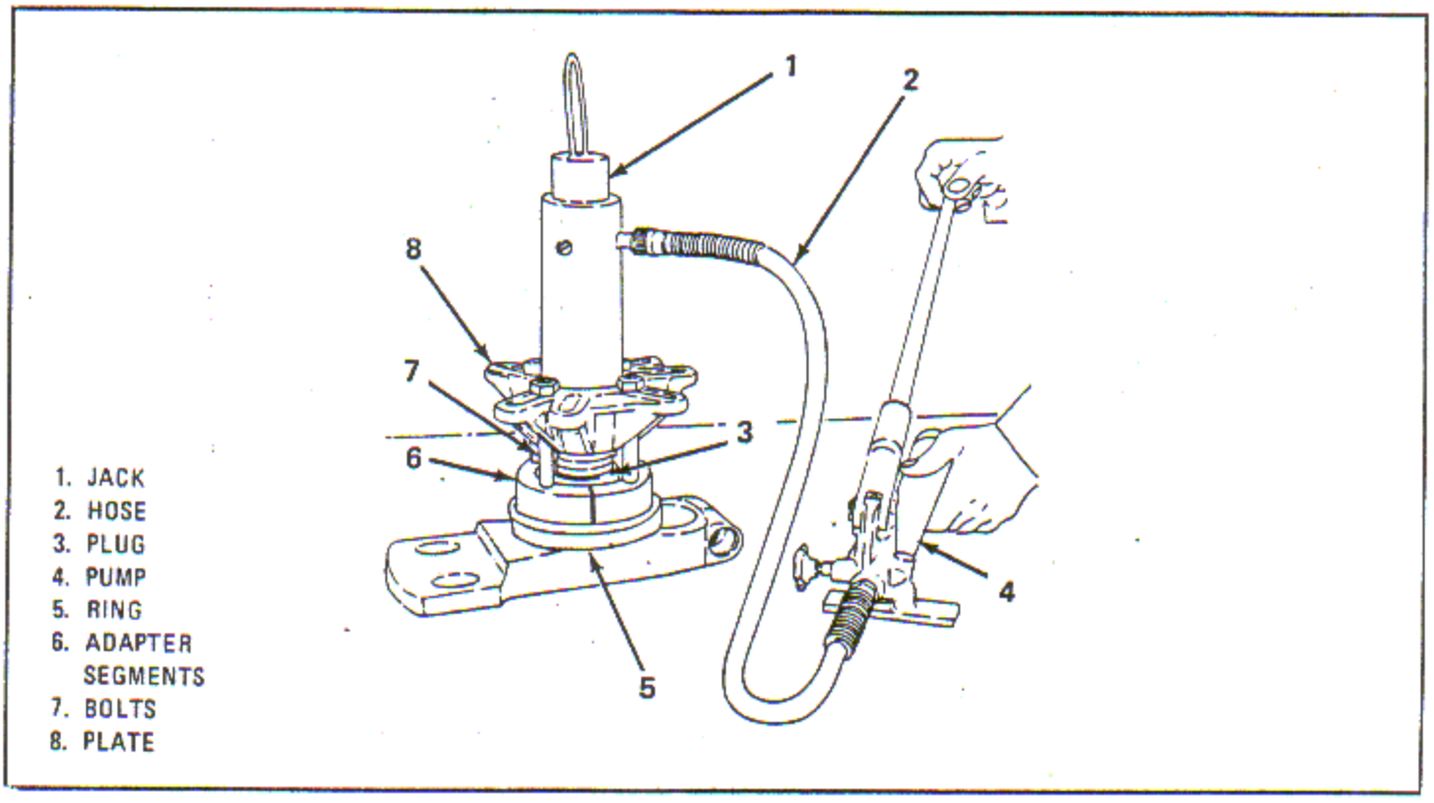

Figure 4-27. Pulling Crankshaft Rear Main Bearing Inner Race

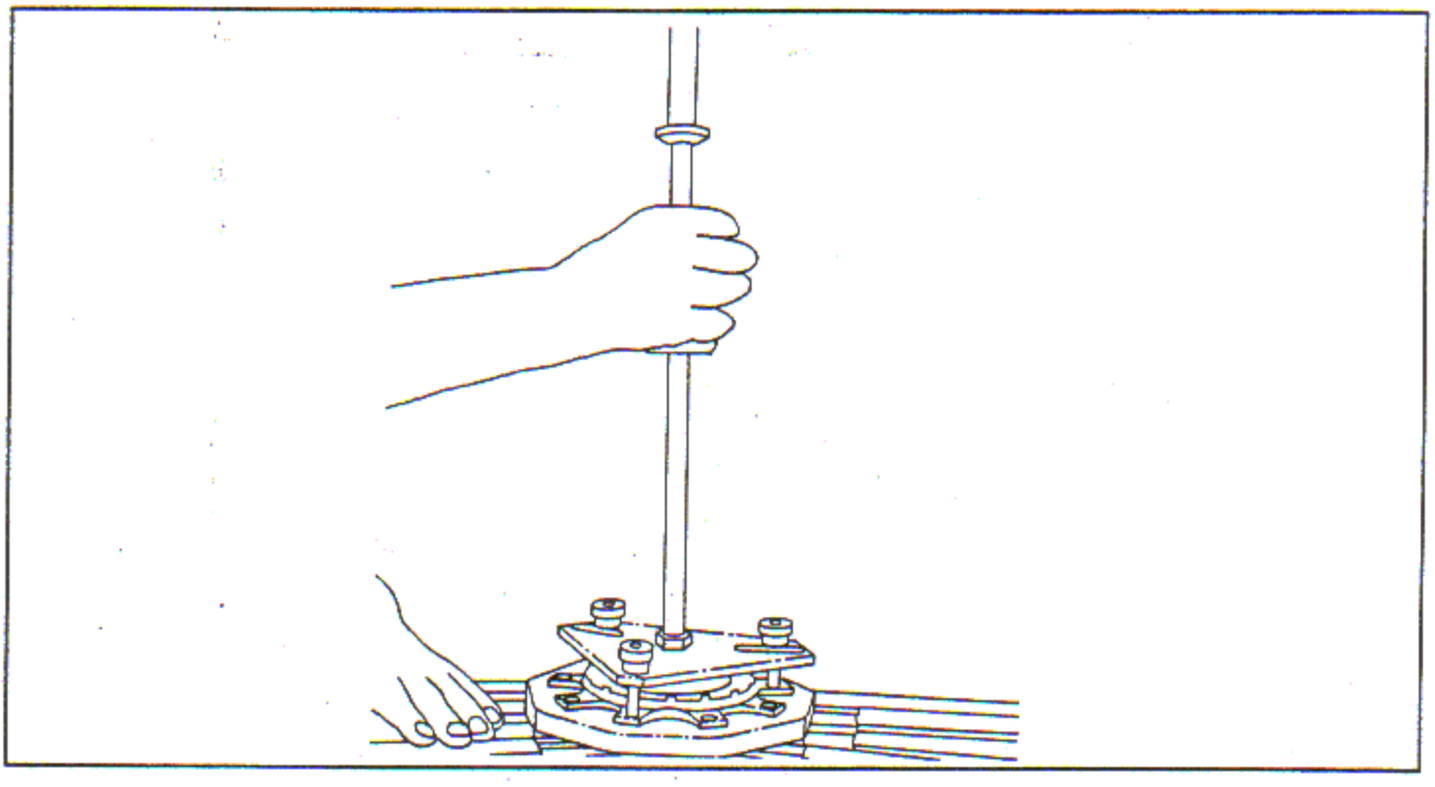

Figure 4-28. Pulling Knuckle Pin Locking Plate

1. WRENCH
2. CAM INTERMEDIATE DRIVE GEAR
3. IMMOBILIZER
4. PULLER SCREWS
5. CAM ASSEMBLY

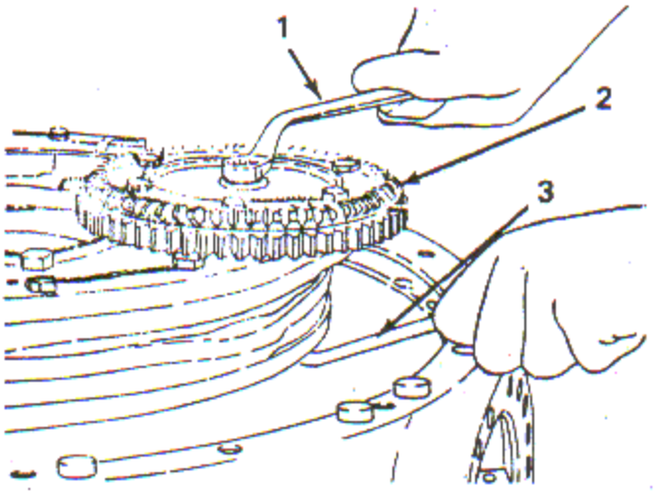

LOOSENING GEAR AND NUT

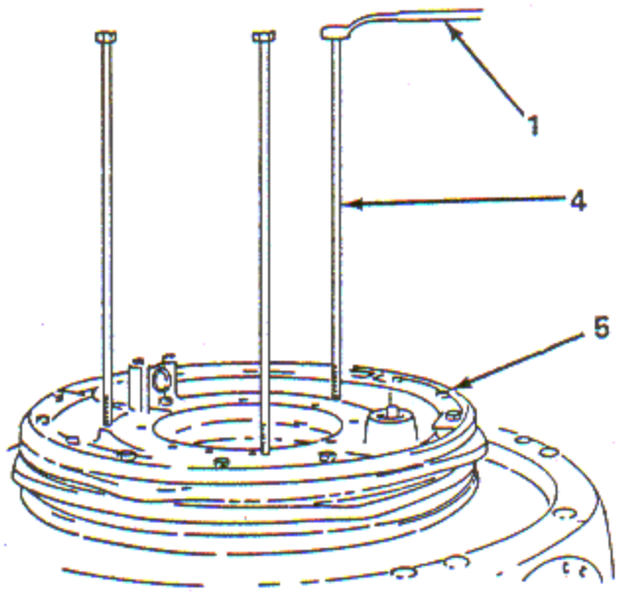

PULLING CAM AND SUPPORT

Figure 4-29. Loosening Cam Intermediate Drive Gear and Pinion Bolt Nut and Pulling Cam and Support

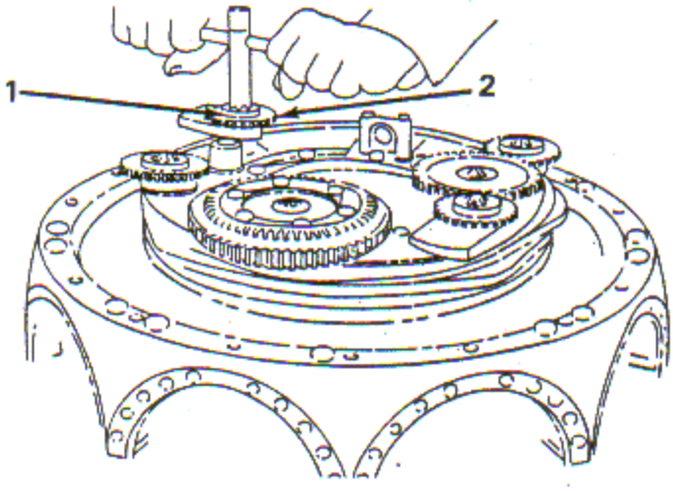

REMOVING DRIVE GEAR NUT

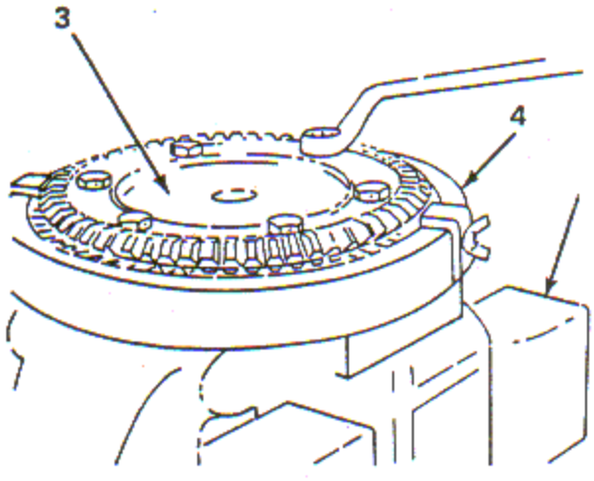

REMOVING DRIVE GEAR SCREWS

1. RETAINING NUT
2. BALANCEWEIGHT GEAR
3. GOVERNOR INTERMEDIATE DRIVE GEAR AND CAM INTERMEDIATE DRIVE GEAR ASSEMBLY
4. FIXTURE
5. VISE

Figure 4-30. Removing Second Order Balanceweight Drive Gear Nut (R1820-80 Series) and Governor Intermediate Drive Gear to Cam Intermediate Drive

CAUTION

Insert a strip of soft metal under each of the three puller screw holes to prevent damage to the crankcase.

e. Install three screw pullers (4, figure 4-29) in the support puller holes and pull the cam assembly (5).

f. Remove the second order balanceweight and intermediate drive gear retaining bolts.

g. Remove any loose dowels from the crankcase attaching flange.

4-39. CAM AND CAM SUPPORT DISASSEMBLY (R1820-76 SERIES, -86A, -86B). (See tool group 11.)

a. Break the lock wire and remove the screws that secure the four cam guides to the support. Remove the cam.

b. Remove the oil sump scavenge pump drive shaft gear support attaching screws. Remove the oil sump scavenge pump driven coupling gear to pinion nut cotter pin. Use immobilizer to hold the head of the bolt and remove the nut. Remove the pinion and bolt and the gear.

4-40. CAM AND CAM SUPPORT DISASSEMBLY (R1820-80 SERIES). (See tool group 11.)

a. Remove the cotter pin from the cam intermediate drive gear assembly retaining bolt. Using immobilizer (3, figure 4-29), hold the head of the bolt and remove the nut. Take off the gear assembly, the bolt and the pinion.

b. Remove the cotter pin from the oil sump scavenge pump driven coupling gear retaining bolt. Hold the head of the bolt and remove the nut. Remove the gear, bolt and pinion.

c. Break lock wire and remove cam retainer attaching screws and washers. Remove split retainer.

4-41. CAM SUPPORT ALIGNMENT PIN AND RETAINING PLATE REMOVAL.

a. Remove the cam support locating pin from the crankcase main front section.

b. Remove the locating pin retaining plate and retaining plate rivets from the cam drive support using standard shop practices.

4-42. GOVERNOR INTERMEDIATE DRIVE GEAR AND CAM INTERMEDIATE DRIVE GEAR DISASSEMBLY. (See tool group 11.)

a. Install the governor intermediate drive gear and cam intermediate drive gear assembly (4, figure 4-30) in fixture (6), and install in a vise (7).

b. Remove the attaching screws. Separate the gears.

4-43. CRANKCASE REAR MAIN SECTION DISASSEMBLY.

a. Remove any loose dowels from the rear parting surface of the crankcase rear main section.

4-44. CRANKCASE FRONT SECTION DISASSEMBLY (R1820-76 SERIES, -86A, -86B). (See tool groups 16 and 17.)

a. Turn the thrust nut all the way off the threads and allow it to remain loose on the propeller shaft (3, figure 4-31). Break the crankcase front section (4) loose from the propeller shaft, using puller (6), hoist (5) and handle (1).

b. Lift the crankcase front section (4), from the propeller shaft assembly (3). The thrust nut will come off with the crankcase front section.

c. Place the crankcase front section (4), on a work bench. Remove the puller (6), and hoist (5). Remove the thrust nut.

d. Remove the remaining flange attaching nuts and washers. Remove the flange spacer. Remove the flange bolt circlets. As each circlet is removed, the bolt will drop out underneath. There are no circlets on the two fixed studs in the crankcase front section (4).

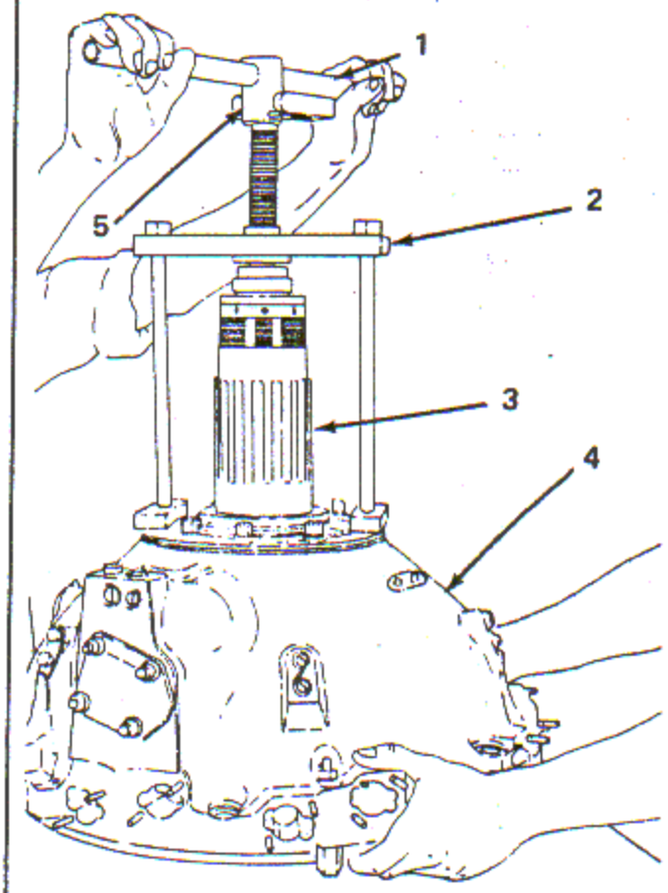

BREAKING SECTION LOOSE

1. HANDLE
2. ADAPTER
3. PROPELLER SHAFT
4. CRANKCASE FRONT SECTION
5. PULLER HOIST
6. PULLER
7. FLANGE

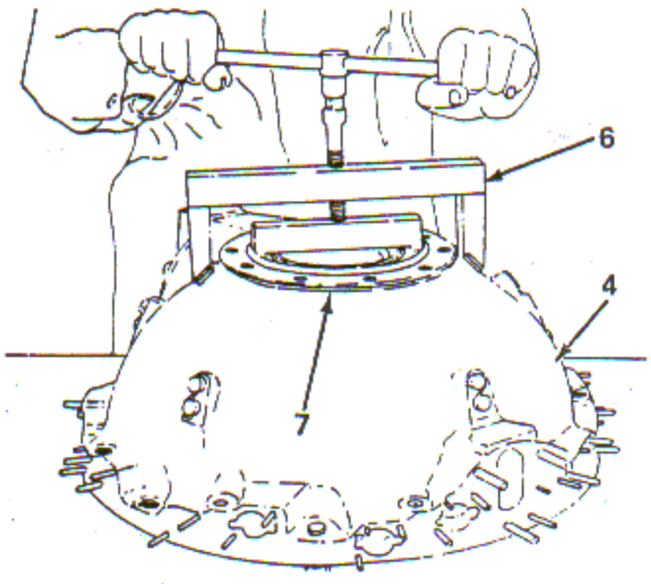

PULLING FLANGE

Figure 4-31. Breaking Crankcase Front Section Loose from Propeller Shaft and Pulling Flange

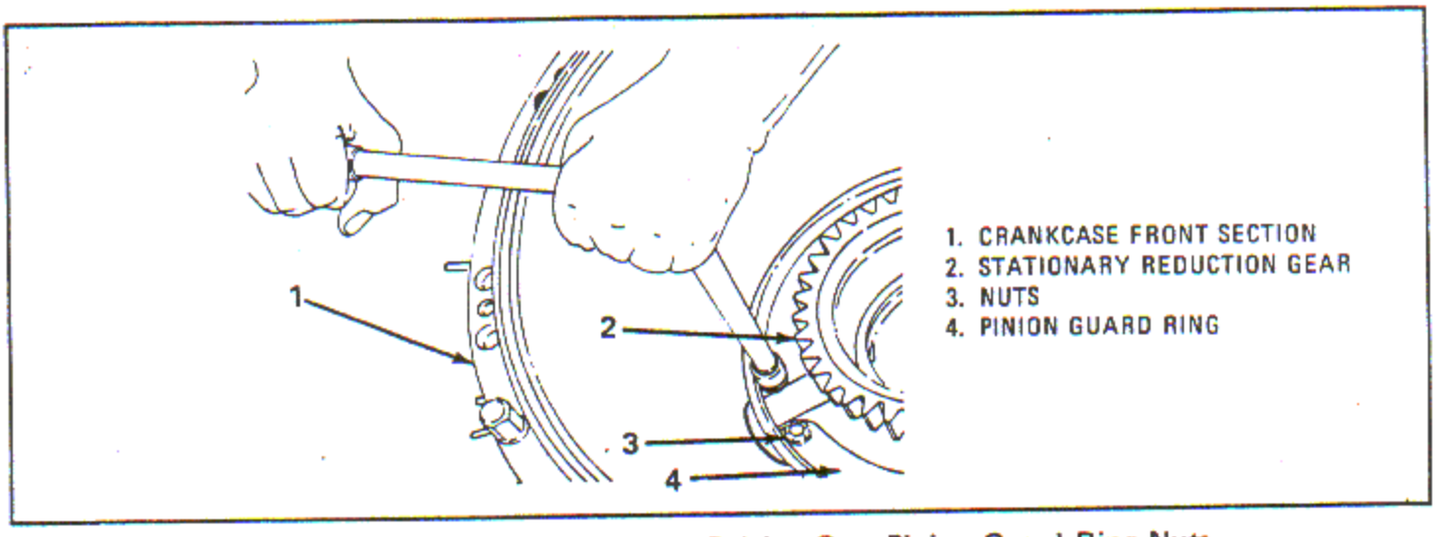

Figure 4-32. Removing Reduction Driving Gear Pinion Guard Ring Nuts (R1820-76 Series, -86A and -86B)

e. Remove the crankcase front section flange (7, figure 4-31), with proper puller (6). Remove the front half of the propeller shaft thrust bearing inner race.

f. Turn the crankcase front section (1, figure 4-32) over. Remove the two nuts (3) that secure the reduction driving gear pinion guard ring (4) and stationary reduction gear (2) to the two fixed studs in the crankcase. Remove the guard ring.

g. Remove the stationary reduction gear (2). Remove the propeller shaft thrust bearing outer race, rollers and cage and the rear half of the inner race.

h. When disassembling the R1820-86B model, remove the external hydro-oil supply tube extension elbow at the governor mounting pad. Remove the governor substituting cover, governor drive gear shaft circlet and governor drive gear and shaft assembly from inside the crankcase. Remove the flanged ring from the rear parting surface. Turn the crankcase front section over on a work bench. Remove the external hydro-oil supply front tube connection from the housing. Remove all remaining plugs from the housing.

4-45. CRANKCASE FRONT SECTION DISASSEMBLY (R1820-80 SERIES). (See tool groups 16 and 17.)

a. Turn the thrust nut all the way off the threads and remove it by backing off the hoist eye temporarily.

b. Using handle (1, figure 4-31) in the eye of puller (6) and adapters (2), turn the puller down against the propeller shaft (3) and break the crankcase front section (4) loose from the propeller shaft assembly (3). Remove the bar and attach a chain hoist. Lift the case clear of the propeller shaft and place it on a bench. Remove the hoist and the puller assembly (5).

c. Remove the remaining front section attaching screws and washers and the front section flange spacer. Install puller (6) against the crankcase front section (4) and under the lip of the crankcase front section flange (7). Pull the flange and remove the gasket.

d. Extract the front half of the thrust bearing inner race, the cage and ball assembly and the rear half of the inner race. Remove the two stationary gear support bolts and washers from the counterbored locations in the front section.

e. Tap the thrust bearing outer race to dislodge it together with the stationary gear support and pinion guard ring. If these parts do not readily come out, turn the case over. Take out the stationary gear and pinion guard ring and pull the stationary gear support with pullers.

f. Remove the nuts, washers, governor substituting cover and gasket. Extract the governor drive gear shaft circlet. Remove the governor drive gear and shaft assembly from inside the crankcase.

g. Remove the flanged ring from the rear parting surface. Remove the seal ring.

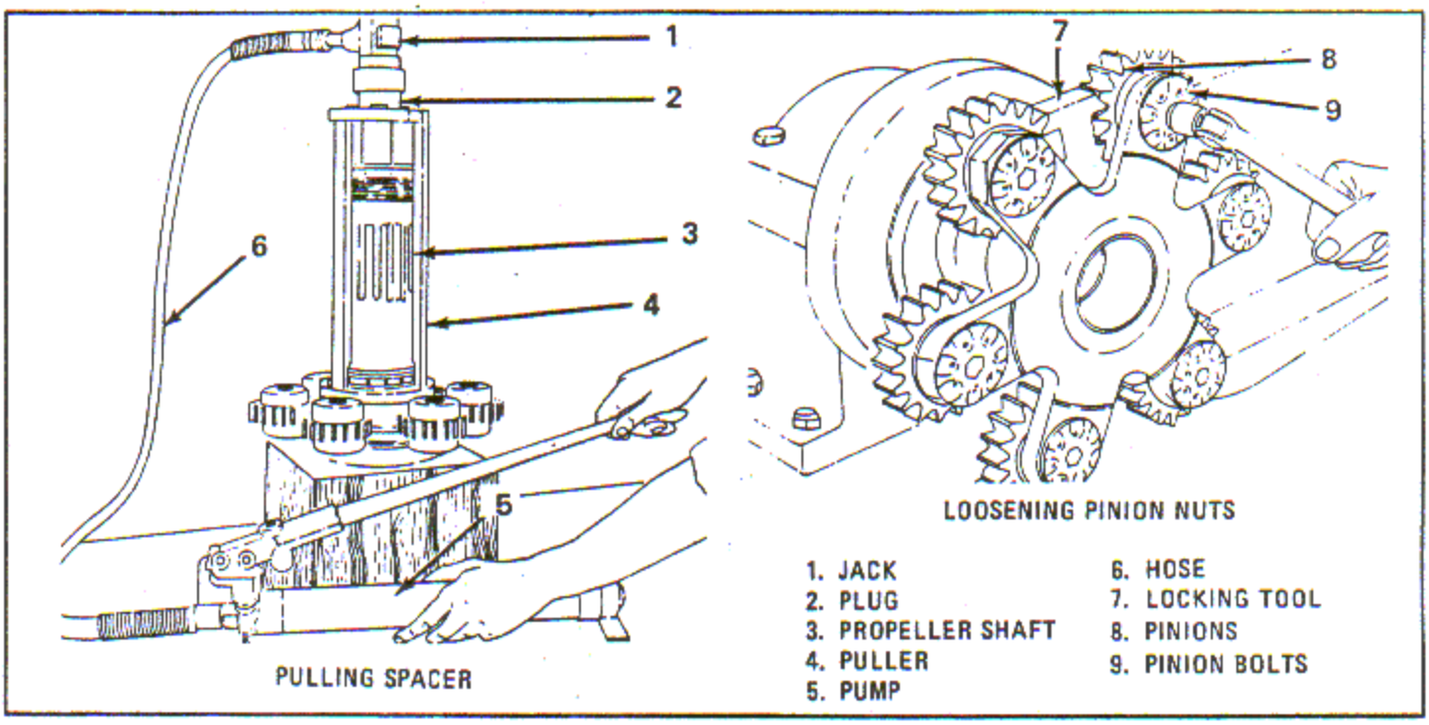

Figure 4-33. Pulling Propeller Shaft Thrust Bearing Spacer and Loosening Reduction Driving Gear Pinion Nuts (R1820-76 Series, -86A, -86B)

h. Turn the crankcase front section over on the work bench. Remove the external oil supply front tube elbow and all the remaining plugs from the housing.

4-46. PROPELLER SHAFT DISASSEMBLY (R1820-76 SERIES, -86A, -86B). (See tool groups 98, 99, 106 and 114.)

a. Place plug (2, figure 4-33) in the end of propeller shaft (3). Install puller (4) around the propeller shaft thrust bearing spacer.

b. Install jack (1), into puller (4), over adapter. Using hose (6), and pump (5), remove the spacer. Remove the spacer rings.

c. Place propeller shaft (3) in adapter and install assembly in fixture as shown. Install locking tool (7), between reduction driving gear pinions (8).

NOTE

The reduction driving gear pinion gear nuts have left hand threads.

d. Remove the pinion lock nut cotter pins. Using suitable wrench, remove the pinion nuts. Withdraw the pinions (8), remove the shaft from the fixture.

4-47. PROPELLER SHAFT DISASSEMBLY (R1820-80 SERIES). (See tool groups 99 and 106.)

a. Place plug (2, figure 4-34) in the end of propeller shaft (3).

b. Install puller (4), around the spacer and screw jack (1), into the puller over the adapter.

c. Assemble hose (6), and pump (5), to jack (1). Operate the puller (4), to remove the spacer. Remove the spacer rings.

d. Place the propeller shaft (3) in fixture (7) using adapter as shown.

e. Break lockwire (8) and screw the nuts (9) from the left hand threaded pinion bolts. Remove the bolts, pinions (10), and bushings. See that the pinions and pinion carrier are stamped with corresponding location numbers. Discard all pinion bushings.

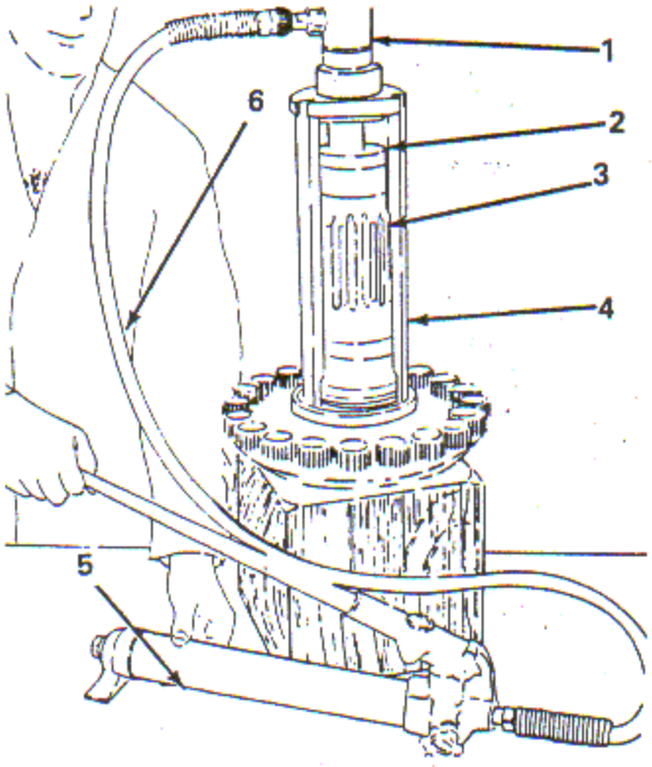

1. JACK
2. PLUG
3. PROPELLER SHAFT
4. PULLER
5. PUMP
6. HOSE
7. FIXTURE
8. LOCK WIRE
9. NUTS
10. PINIONS

PULLING SPACER

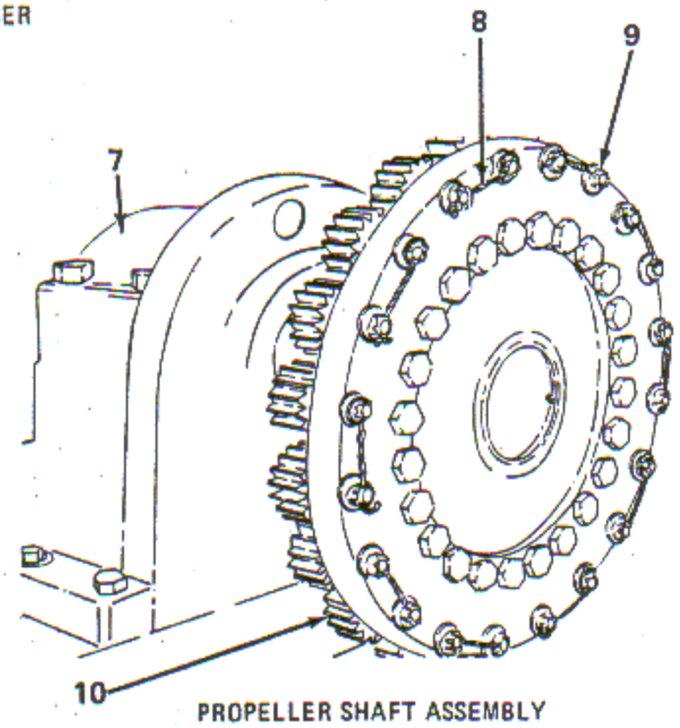

PROPELLER SHAFT ASSEMBLY

Figure 4-34. Pulling Thrust Bearing Spacer and Placing Propeller Shaft Assembly in Fixture (R1820-80 Series)

f. Remove the propeller shaft (3, figure 4-34) from the fixture (7) and place it on a bench. Cut the lock wire (8) and remove the propeller shaft to pinion carrier retaining nuts (9) and bolts.

g. Seat the propeller shaft flange on a block and tap the pinion carrier off.

4-48. GOVERNOR DRIVE GEAR DISASSEMBLY. (See tool group 56.)

a. Place the governor drive gear (2, figure 4-35) and drive shaft assembly in fixture (3) and place the fixture in a vise (4). Remove the drive shaft plug retaining circlet.

b. Break the lockwire and remove the drive gear to shaft screws (1). Remove the gear (2), and shaft (7), from vise (4) and remove gear from shaft.

c. Press the drive gear shaft plug from the shaft (7), using drift (6), in an arbor press (5) as shown.

4-49. FRONT OIL SUMP AND PUMP DISASSEMBLY.

a. Remove the fiber lock nuts and washers that secure the oil pump body and cover to the oil sump housing.

b. Take the cover off and remove the oil sump scavenge pump drive gear and driven gear.

c. Tap the oil pump body and remove it.

4-50. CYLINDER AND PISTON DISASSEMBLY. (See tool group 31A.)

a. Place the cylinder on a disassembly stand. The valve assemblies will be removed first. Loosen intake and exhaust valve spring upper washer locks with loosening tool.

b. Install a valve spring compressor on the exhaust rocker box and compress the springs. Remove the valve spring upper washer locks. Remove the compressor. Remove the valve spring upper washer and the inner and outer springs. See figure 2-6.

CAUTION

If either, or both, inner and outer exhaust valve springs are found to be broken, reject the spring and the exhaust valve.

c. Install the compressor on the intake rocker box. Compress the springs and remove the valve spring upper washer locks. Remove the upper washer and the inner and outer springs. Remove the intake valve spring inner lower washer.

CAUTION

If either, or both, inner and outer intake valve springs are found to be broken, reject the spring and the intake valve.

d. Install holders (1, figure 4-36) on the intake and exhaust valves (2). Remove the cylinder (3) from stand. Remove the valves from the cylinder.

NOTE

Cylinders incorporate one of three types of exhaust valve assemblies, therefore, to remove the parts remaining in the exhaust side of the cylinder, select one of the procedures in steps e through g as applicable.

e. Remove the exhaust valve oil seal ring spacer retainer assembly using puller. Remove the oil seal rings and spacers from the retainer with remover and installer, and a wooden or rawhide mallet. Use a suitable wrench to remove the retaining nut.

f. Remove the lower spring retainer, exhaust valve guide lock and spacer.

g. For engine using the spun-in type exhaust valve guide, it is only necessary to remove the inner and outer lower washer.

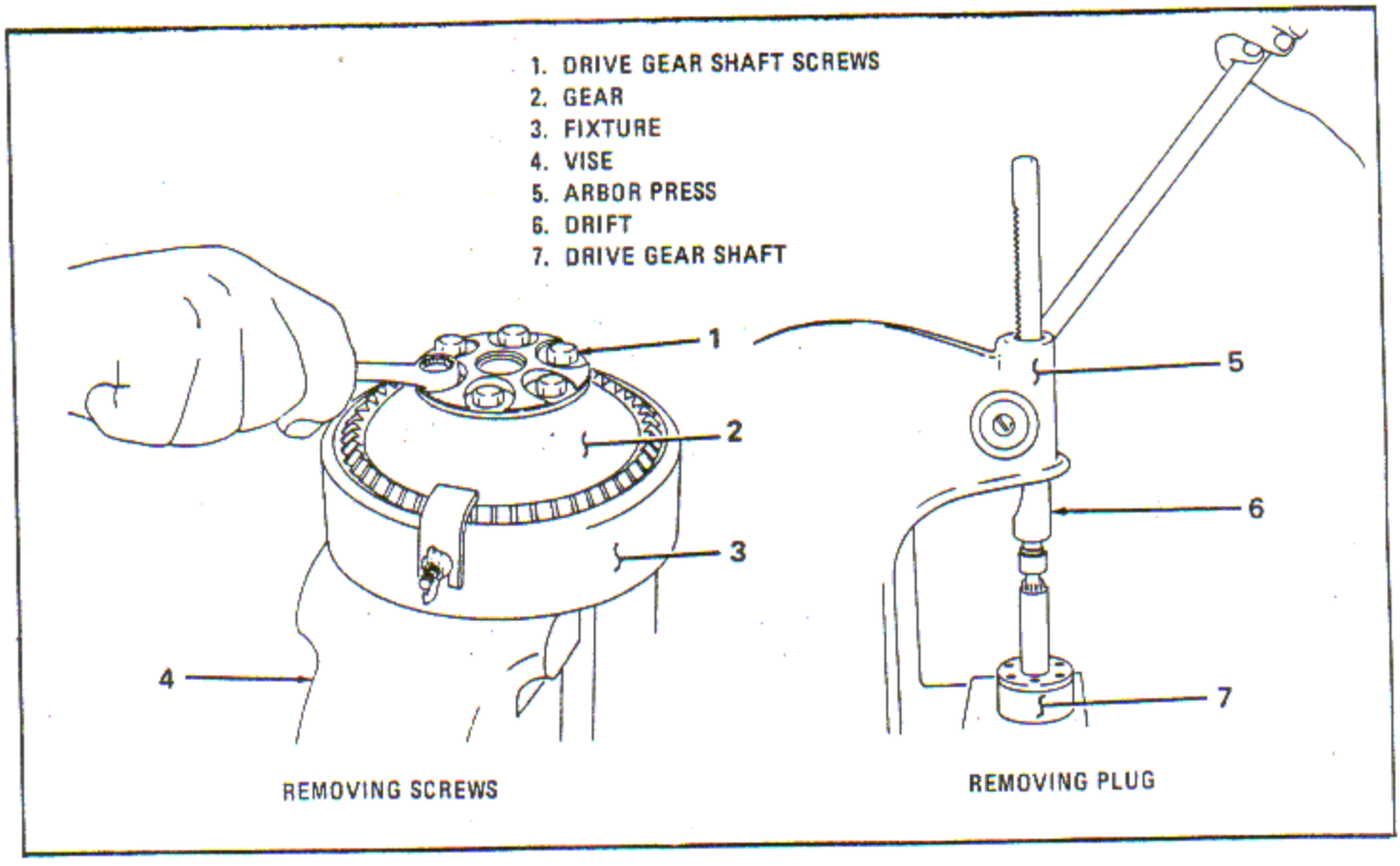

Figure 4-35. Removing Governor Drive Gear to Shaft Screws and Governor Drive Gear Shaft Plug

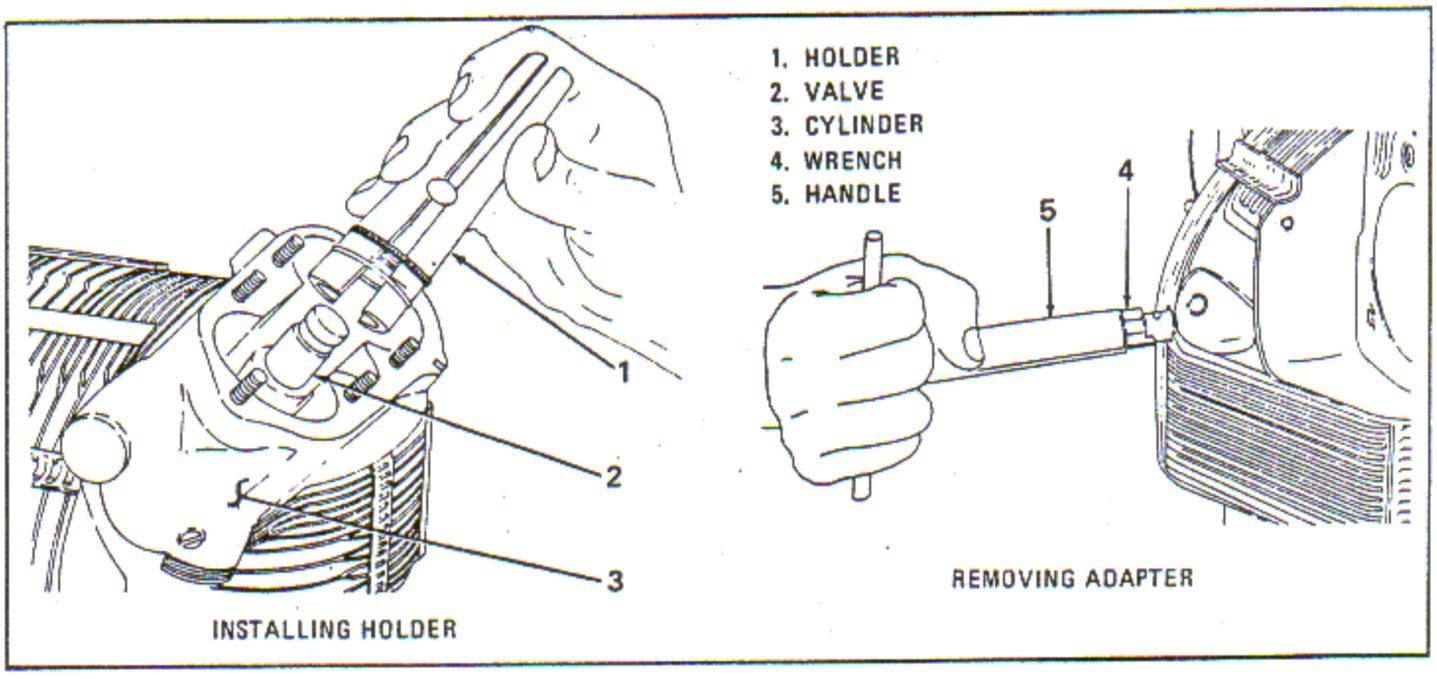

Figure 4-36. Installing Valve Holder and Removing Thermocouple Adapter

h. If it is necessary to remove the thermocouple adapter from the cylinder head, use wrench (4, figure 4-36) and a suitable handle (5).

4-51. PISTON DISASSEMBLY.

a. Remove the piston rings from the piston. Use new rings at reassembly.

4-52. ROCKER ARM DISASSEMBLY. (See tool group 117.)

a. Remove the adjusting screw lock screw and remove the adjusting screw. See figure 4-37.

b. Press out the rocker arm bearing using adapter and a plug and collar in an arbor press.

4-53. SUPERCHARGER FRONT HOUSING DISASSEMBLY. (See tool group 117.)

a. Remove the breather outlet flange, discard the packing ring. If the core hole plugs are to be removed, use remover and installer. See figure 4-38.

b. Should the impeller bearing shaft support require replacement, remove the eight attaching screws, remove support, discard the oil seal. Remove any remaining plugs from the housing.

c. Remove the nine intake pipe packing nuts and rings. Discard the packings.

d. Remove the oil drain and oil transfer dowels. Discard the oil seal rings.

4-54. REAR OIL PUMP REMOVAL. (See tool group 87.)

a. Remove the seven nuts and washers securing the tachometer drive shaft gear housing to the oil pump cover. Remove housing and gasket. Discard gasket.

b. Extract tachometer drive gear assembly, oil seal ring and ring retainer from the oil pump cover.

c. Remove the eight oil pump and cover retaining nuts.

d. Remove the three retaining nuts and the oil pump outlet adapter (not applicable to increased capacity pump), discard the gaskets.

e. Break the lockwire, and as shown in figure 4-39, remove the remaining oil pump to rear cover attaching nut from the foot of the pump using wrench.

f. Remove the two oil pump retaining nuts from the short mounting studs at the base of the pump (increased capacity pump only).

g. Remove the oil pump. Remove the oil pump drive gear spring if it comes loose with the pump. Discard the pump gasket. Tie the assembly together with lockwire.

4-55. DUAL ACCESSORY DRIVE HOUSING REMOVAL. (See tool group 38.)

a. Remove the upper and lower accessory substituting covers. Remove dual accessory drive housing cover attaching nuts and remove the cover. Remove the gears from the dual accessory drive housing.

b. Cut the lock wire and remove the two acorn nuts that secure the dual accessory drive housing to the supercharger rear housing and cover. These nuts are located on the underside of the rear housing flange.

c. Remove the dual accessory drive housing to supercharger rear cover attaching nuts. An extended nut is located on the rear parting surface of the housing. The remaining nuts are located inside the housing. Use wrench B on the plain nuts. See figure 4-40. Use wrench A on the slotted nuts.

d. Remove the center bushing in the housing to facilitate cleaning of oil passage. Refer to paragraph 6-766.

NOTE

The housing must be lifted in order to completely remove the slotted nut and plain nut located under the flange of the housing. Remove the housing.

4-56. SUPERCHARGER CLUTCH OIL CONTROL VALVE REMOVAL (R1820-76 SERIES, -86A AND -86B). (See tool group 126.)

a. Remove the supercharger clutch oil control valve housing attaching nuts and washers. Remove

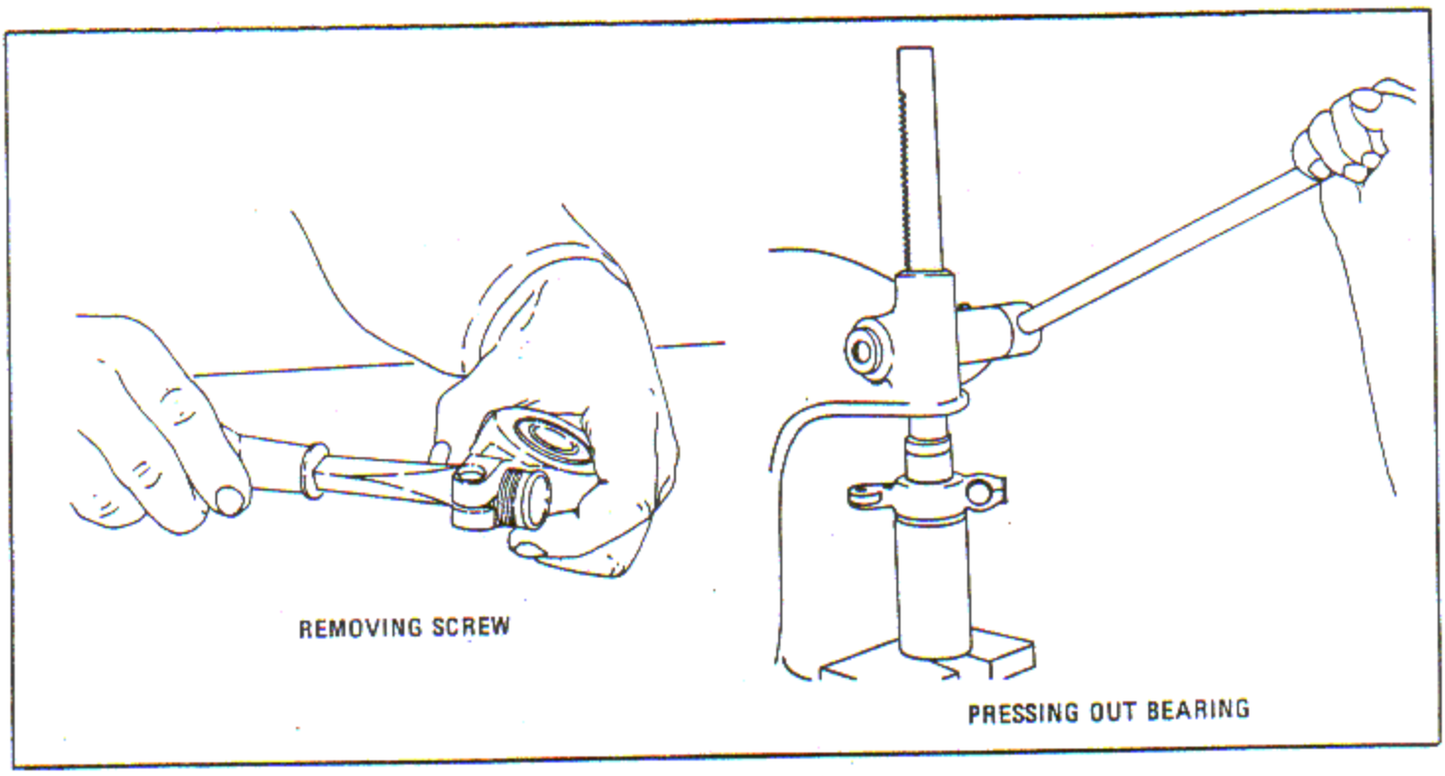

Figure 4-37. Removing Rocker Arm Adjusting Screw and Pressing Out Bearing

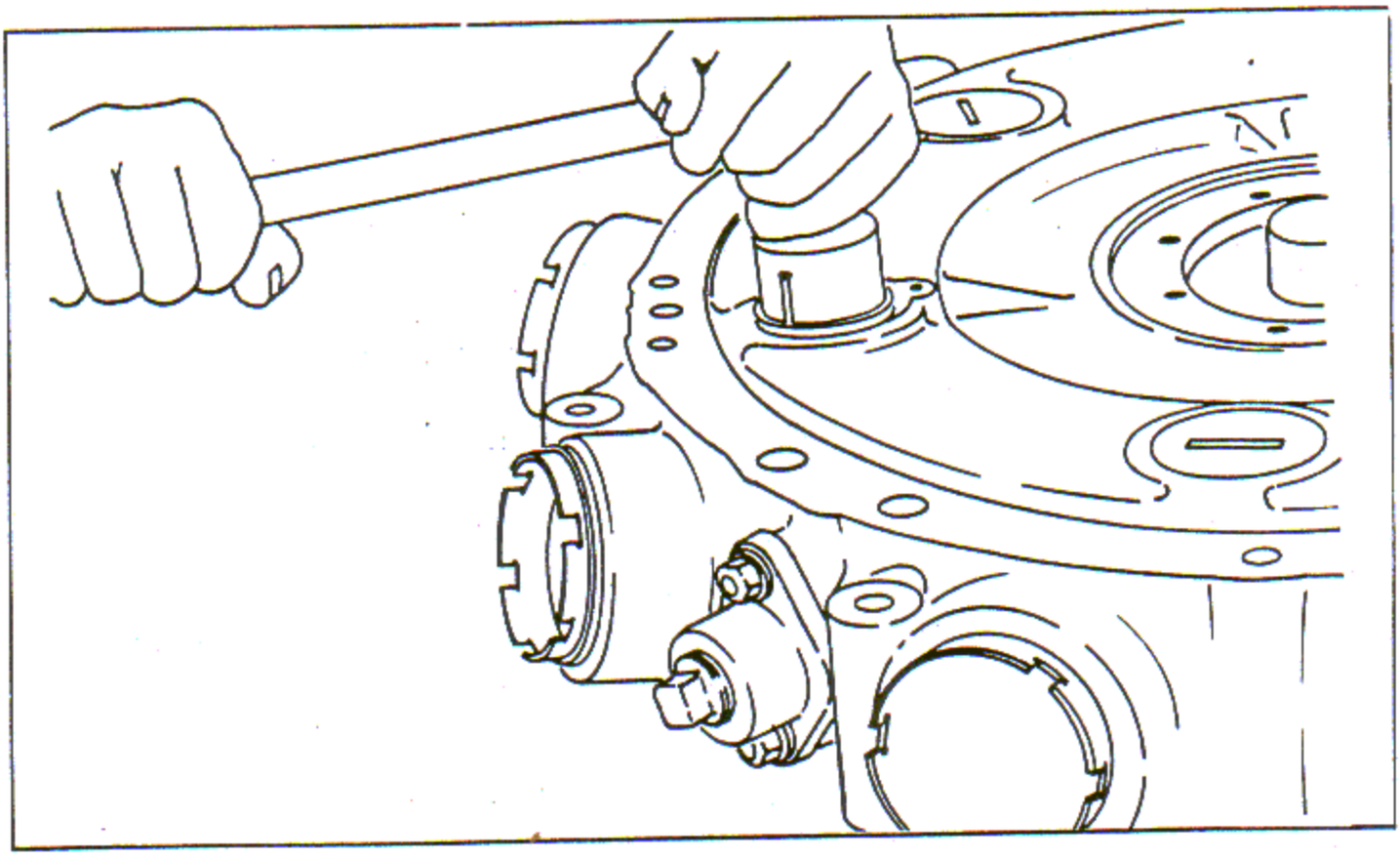

Figure 4-38. Removing Core Hold Plug from Supercharger Front Housing

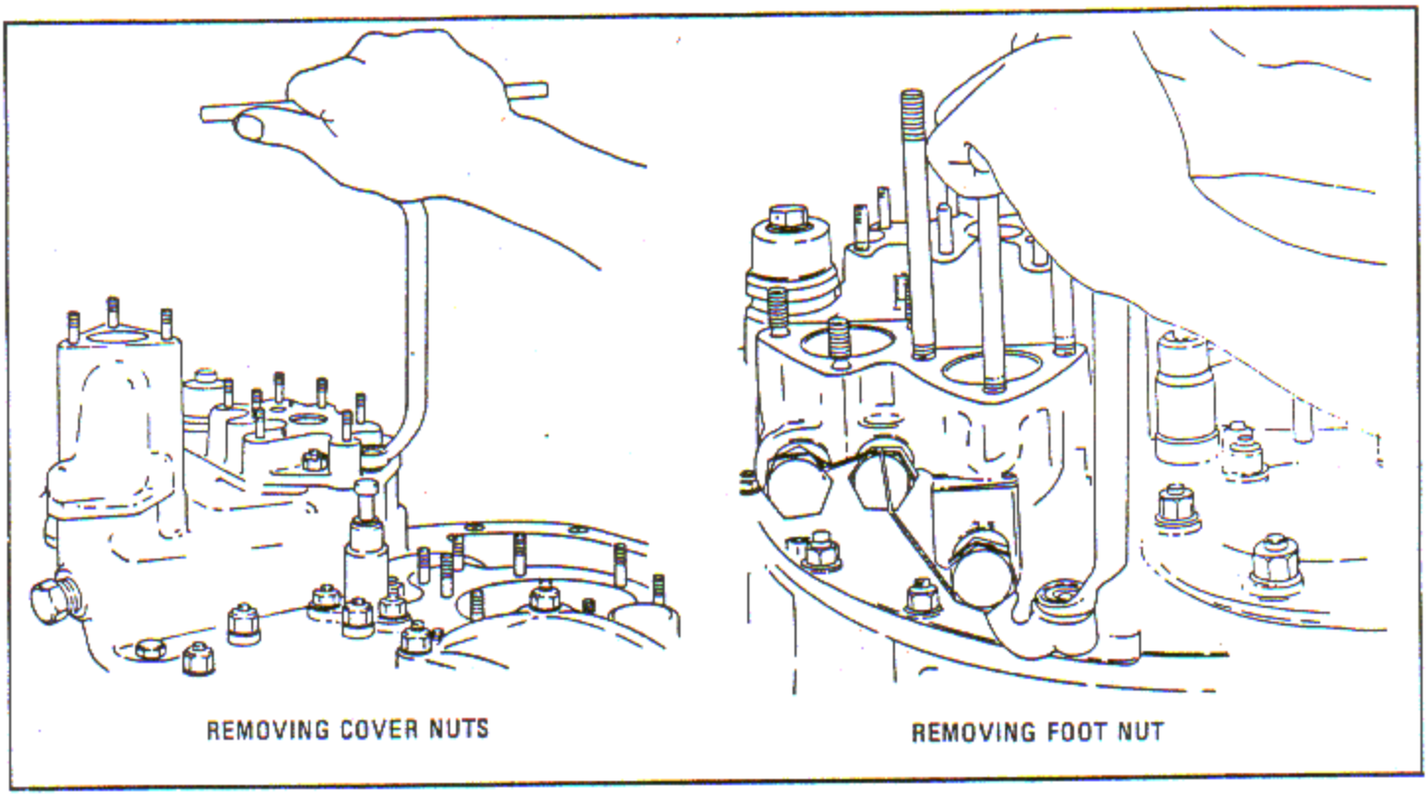

Figure 4-39. Removing Oil Pump to Rear Cover Nuts and Oil Pump Foot Nut

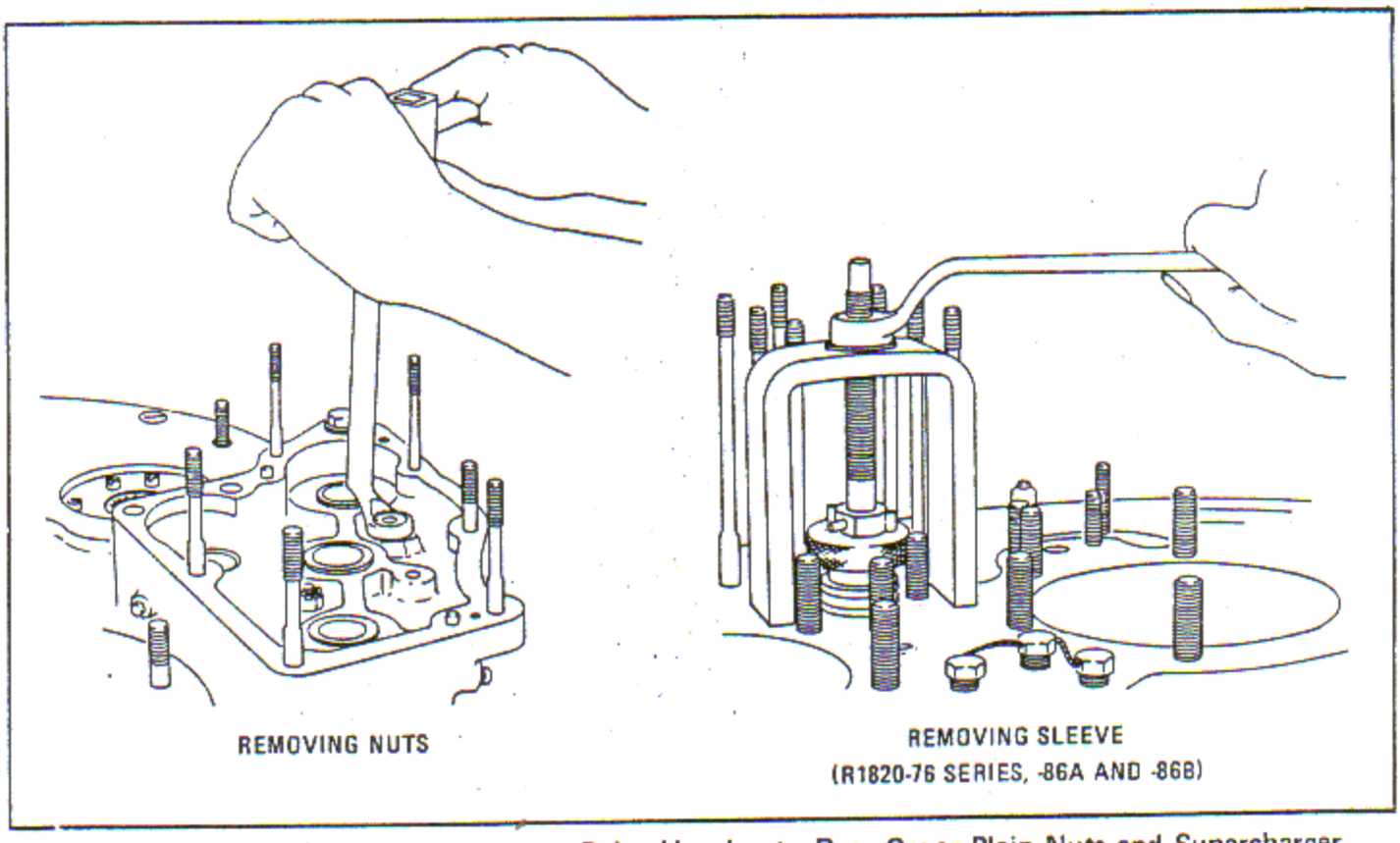

Figure 4-40. Removing Dual Accessory Drive Housing to Rear Cover Plain Nuts and Supercharger Clutch Oil Control Valve Sleeve

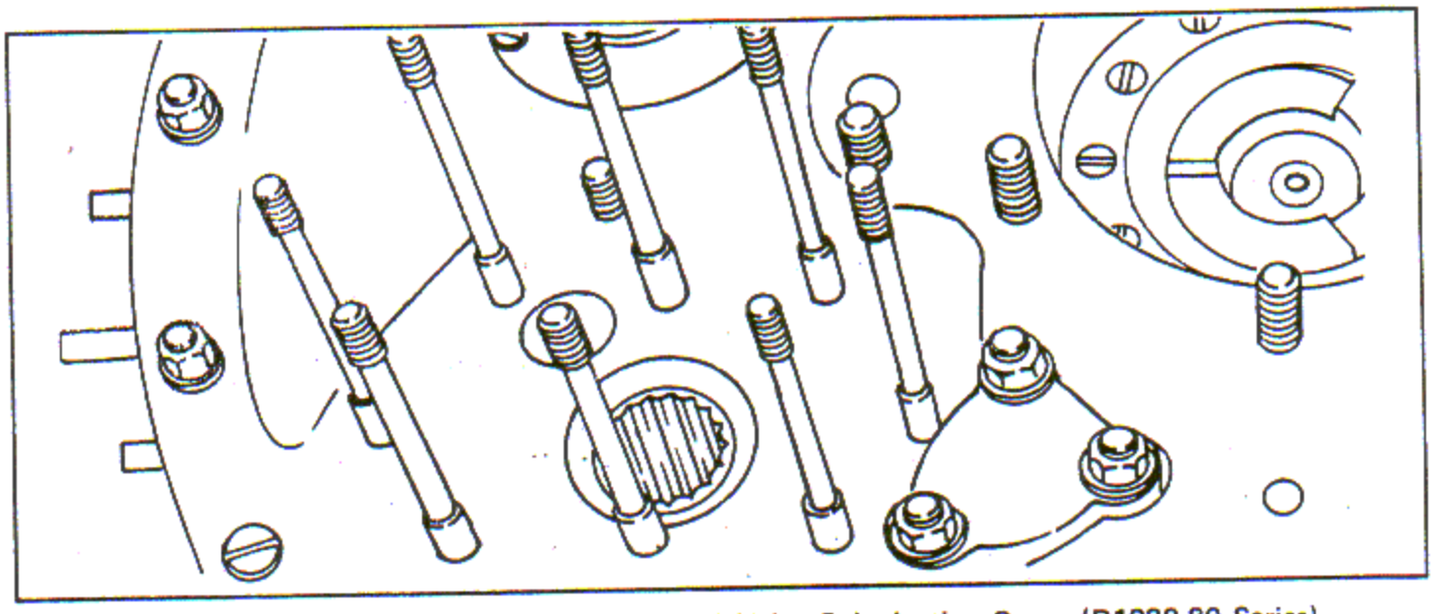

Figure 4-41. Supercharger Clutch Oil Control Valve Substituting Cover (R1820-80 Series)

the oil control valve assembly and the oil control valve sleeve using puller.

b. Remove the housing from the valve. Remove the outer packing, inner packing, valve spring upper washer, and the two springs and stop washer.

4-57. SUPERCHARGER CLUTCH CONTROL VALVE SUBSTITUTING COVER REMOVAL (R1820-80 SERIES).

a. Remove the attaching nuts from the three-stud cover located to the right of the oil pump mounting studs. See figure 4-41.

b. Remove the cover and gasket.

4-58. SUPERCHARGER DRAIN VALVE REMOVAL. (See tool group 127.)

a. Remove the supercharger drain valve assembly from the supercharger rear housing using a suitable socket wrench. Discard the two rubber rings located in the groove on the small diameter end of the body. See figure 4-42.

NOTE

If the return tube assembly (2) is seized in the supercharger rear housing when the drain valve assembly is removed, use adapter and puller to remove the tube as shown.

b. If the drain valve housing (10) unscrews from the drain valve body (4) leaving the body in the supercharger rear housing, remove the body using a suitable socket wrench.

c. If the supercharger drain valve body (4) and housing (10) are removed as a unit, place the valve body in holder and unscrew the valve housing from the valve body. Ensure the piston and disc assembly (6) is not dropped.

d. Remove the small retaining screw from the side of the valve body (4). Shake out the two small check balls. Ensure that the balls do not drop.

e. Pull the return tube from the valve body (4), if not already removed, using adapter and puller.

f. Using suitable pliers, remove the circlet (7) securing the valve spring (9) and retainer (8) in the valve housing (10). Remove the retainer and spring from the housing.

4-59. SUBSTITUTING COVERS REMOVAL. (See tool group 58.)

a. Remove the gun synchronizer impulse generator drive substituting cover (1, figure 4-43) using puller (3) and adapter (2). Discard the oil seal rings.

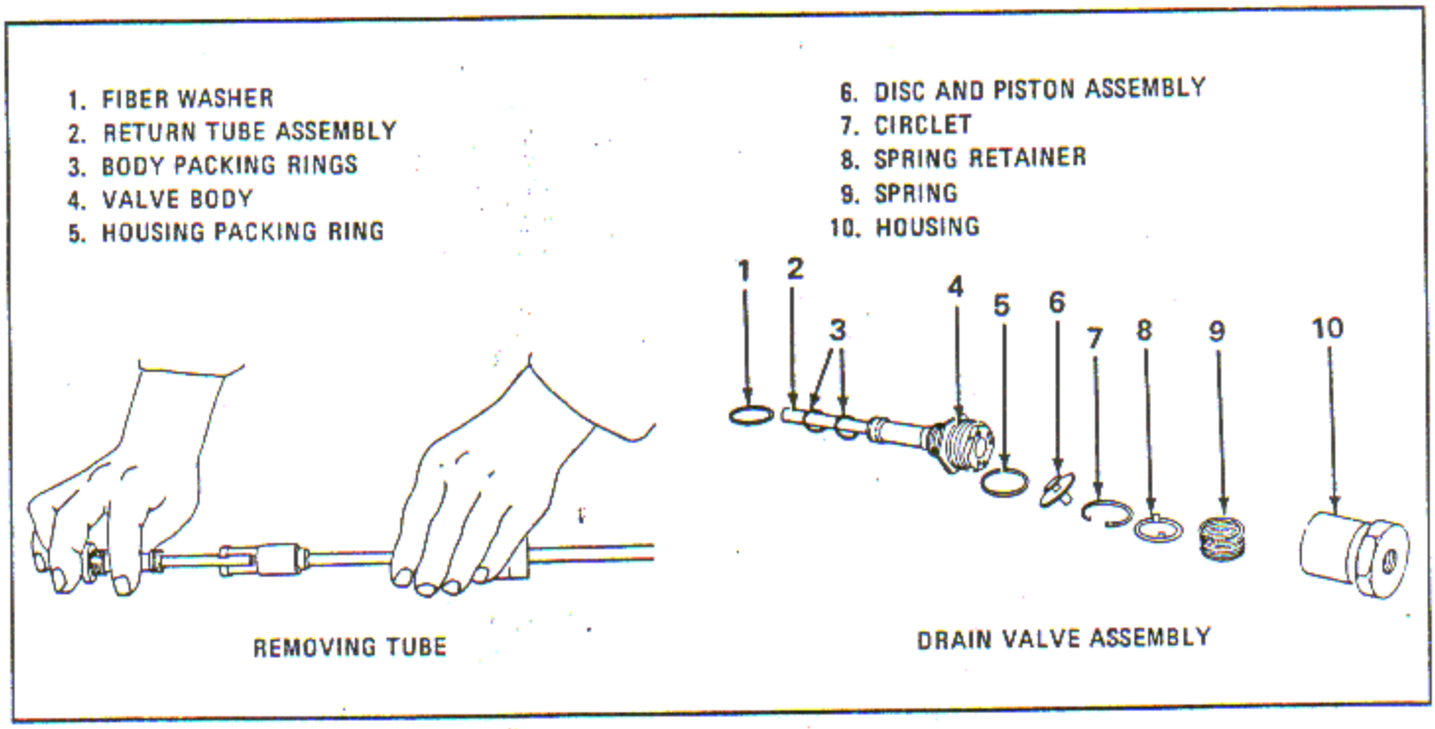

Figure 4-42. Removing Return Tube from Supercharger Drain Valve Body and Drain Valve Assembly

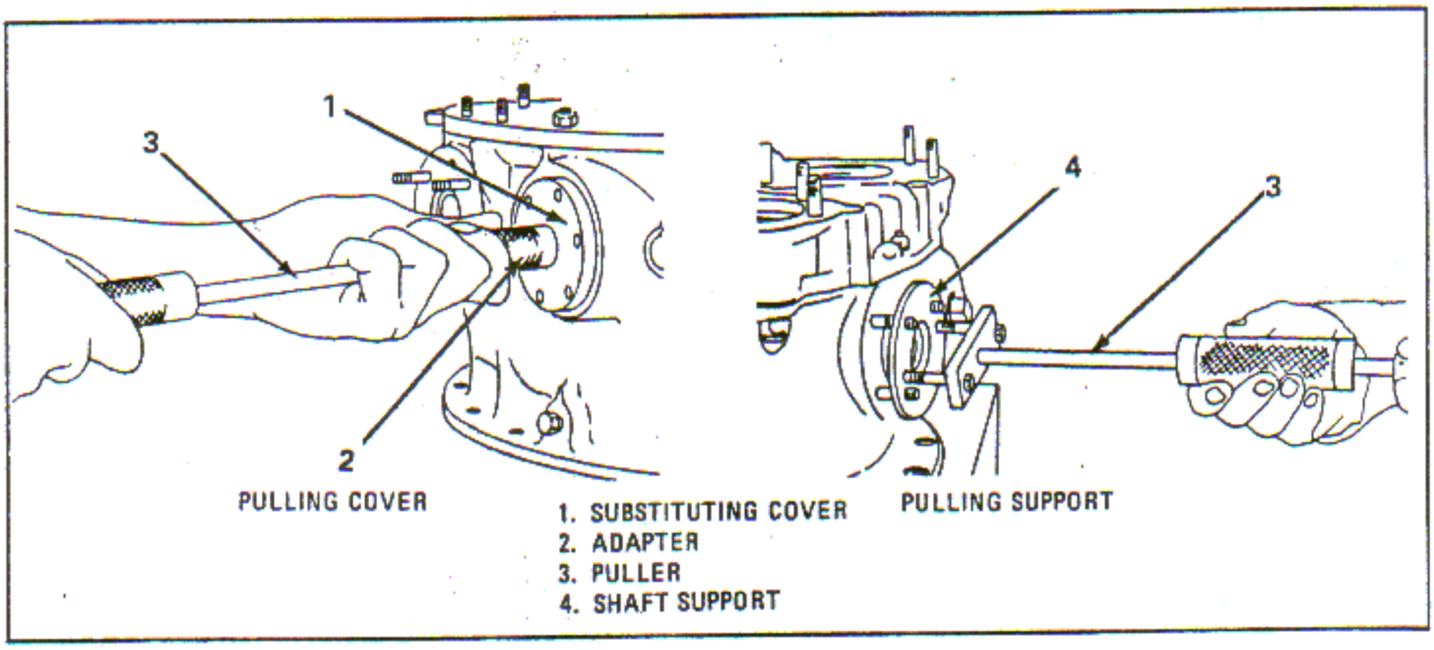

Figure 4-43. Pulling Gun Synchronizer Impulse Generator Drive Substituting Cover and Fuel Pump Drive Shaft Support

b. Remove the manifold absolute pressure regulator support substituting cover screws. Remove the cover and gasket.

4-60. MAGNETIC DRAIN PLUG REMOVAL.

a. Remove the magnetic drain plug with a suitable wrench.

b. Remove the plug gasket.

c. Remove the plug adapter assembly and adapter packing ring.

4-61. OIL STRAINER REMOVAL. (See tool group 90.)

a. Remove the three oil strainer cover attaching nuts and washers. Remove the center oil cover to strainer screen screw.

b. Tap the cover off. Discard oil seal ring and gasket.

c. Screw puller into the core of the oil strainer and remove it from cavity in supercharger rear housing.

NOTE

For further disassembly and cleaning of oil strainer, refer to paragraph 5-49.

4-62. FUEL PUMP DRIVE SHAFT SUPPORT REMOVAL. (See tool group 53.)

a. Using puller, pull the fuel pump drive shaft support. The shaft is dislocated when the support is withdrawn.

b. Remove the shaft carefully.

4-63. SUPERCHARGER REAR COVER REMOVAL. (See tool groups 131 and 133.)

a. Remove the lifting eye from the starter adapter. Remove the carburetor substituting cover from the mounting pad.

CAUTION

The main oil pressure strainer, gun synchronizer impulse generator substituting cover and fuel pump drive shaft support must be removed before removing the supercharger rear cover.

b. Remove the supercharger rear cover attaching nuts and washers using applicable wrench. Three of the attaching nuts are recessed in the cover.

c. Remove the three puller screws (3, figure 4-44) and install pullers in the rear cover (1). Apply torque to pullers and remove the rear cover.

d. Remove the drive gear assemblies from the rear supercharger housing (4).

4-64. IMPELLER DRIVE AND ACCESSORY DRIVE AND STARTER SHAFT REMOVAL (R1820-76 SERIES, -86A, -86B).

a. Remove the roller clutch assembly consisting of the impeller drive roller clutch retainer and generator drive gear, the impeller intermediate drive gear shaft thrust washer, the impeller low speed drive clutch cam and the rollers and cage.

b. Remove the accessory drive and the starter shaft assembly. This assembly consists of starter shaft, the accessory drive gear, the drive gear pins and springs, and the accessory drive and starter shaft plate. Remove the accessory drive and starter shaft thrust ring.

c. Remove the impeller intermediate drive gear shaft and pinion assembly. Remove the impeller shaft retainer attaching screws. Remove the retainer and shim. Remove the impeller shaft drive gear which is seated in the bottom of the rear housing. Remove the impeller intermediate drive shaft pinion front cage bushing from the impeller shaft drive gear.

4-65. IMPELLER DRIVE AND ACCESSORY DRIVE AND STARTER SHAFT REMOVAL AND DISASSEMBLY (R1820-80 SERIES).

a. Remove the accessory drive and starter shaft assembly which consists of the shaft and the accessory drive gear with springs, pins, plate, screws, starter plug and retaining ring.

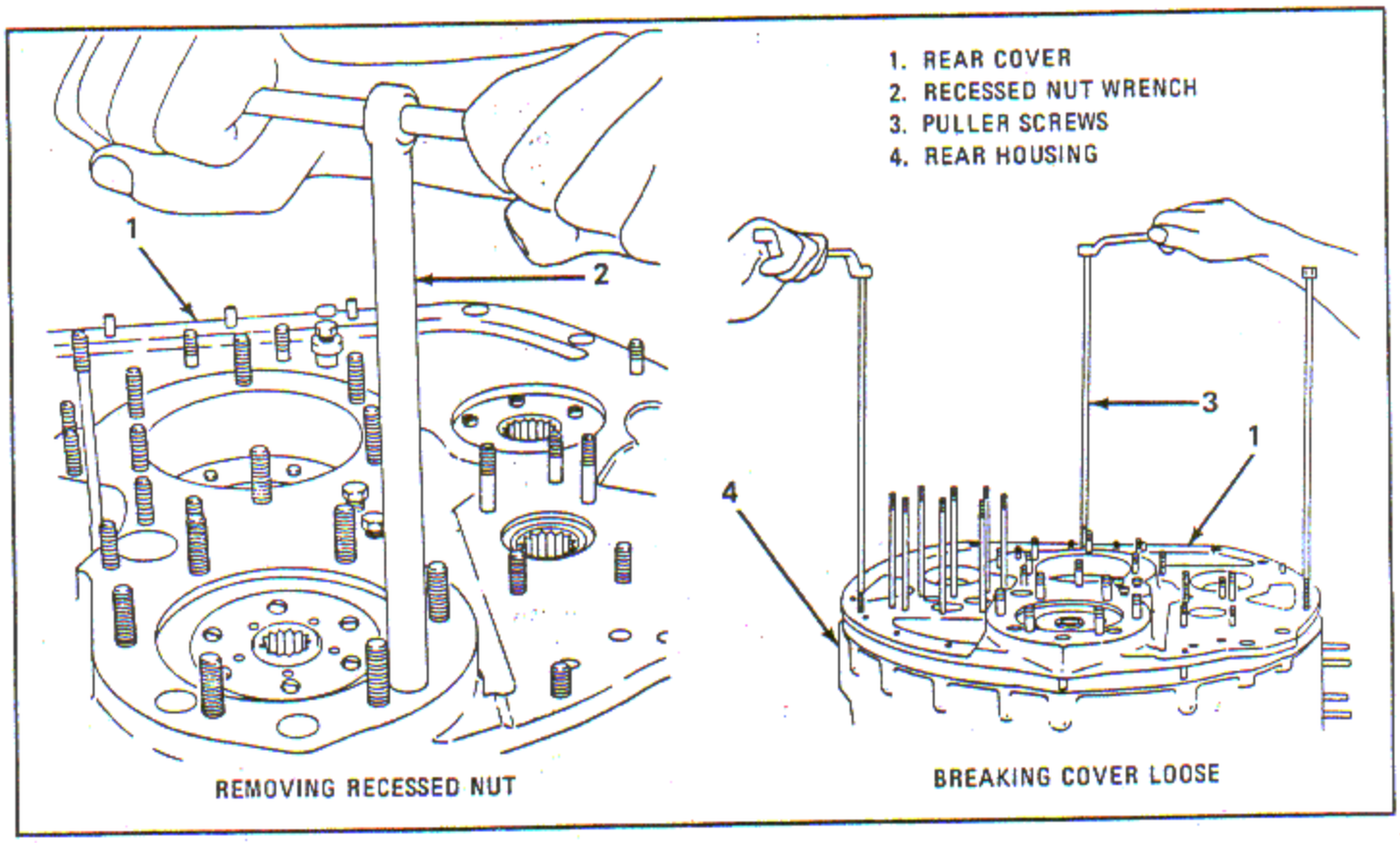

Figure 4-44. Removing Recessed Supercharger Rear Cover Attaching Nut and Breaking Rear Cover Loose from Rear Housing

b. Remove the impeller drive gear shaft and pinion.

c. Remove the five impeller shaft retainer attaching screws, the retainer, seal ring and shim. Remove the impeller shaft thrust ring.

4-66. IMPELLER REMOVAL. (See tool groups 68, 130 and 134.)

NOTE

A work bench with mounting provisions for the impeller shaft locking tool and having holes to accommodate the studs on rear face of supercharger rear housing is needed for this operation

a. Place the supercharger rear housing (6, figure 4-45) face down on bench with the teeth of impeller shaft gear installed in teeth of locking tool, which is secured to bench. See figure 2-7. Ensure the studs on face of supercharger housing mate with holes drilled in bench.

b. Place strips of light cardboard between the impeller vanes and diffuser plate. Bend the tab lock on the impeller shaft front nut washer away from impeller shaft nut.

c. Install the impeller shaft front nut lug wrench support (4, figure 4-45) over the impeller shaft and on supercharger rear housing flange (5).

d. Using wrench (1) and handle (2) on nut and suitable hammer (3), remove the nut, lock washer and impeller front oil seal. Reinstall housing on stand.

e. Install spacer (7) by inserting it through the carburetor mounting pad and installing the spacer between the impeller (8) and supercharger rear housing (6). The lip of the tool should be toward the top against the supercharger rear housing. The tool is held with a locking ring (9).

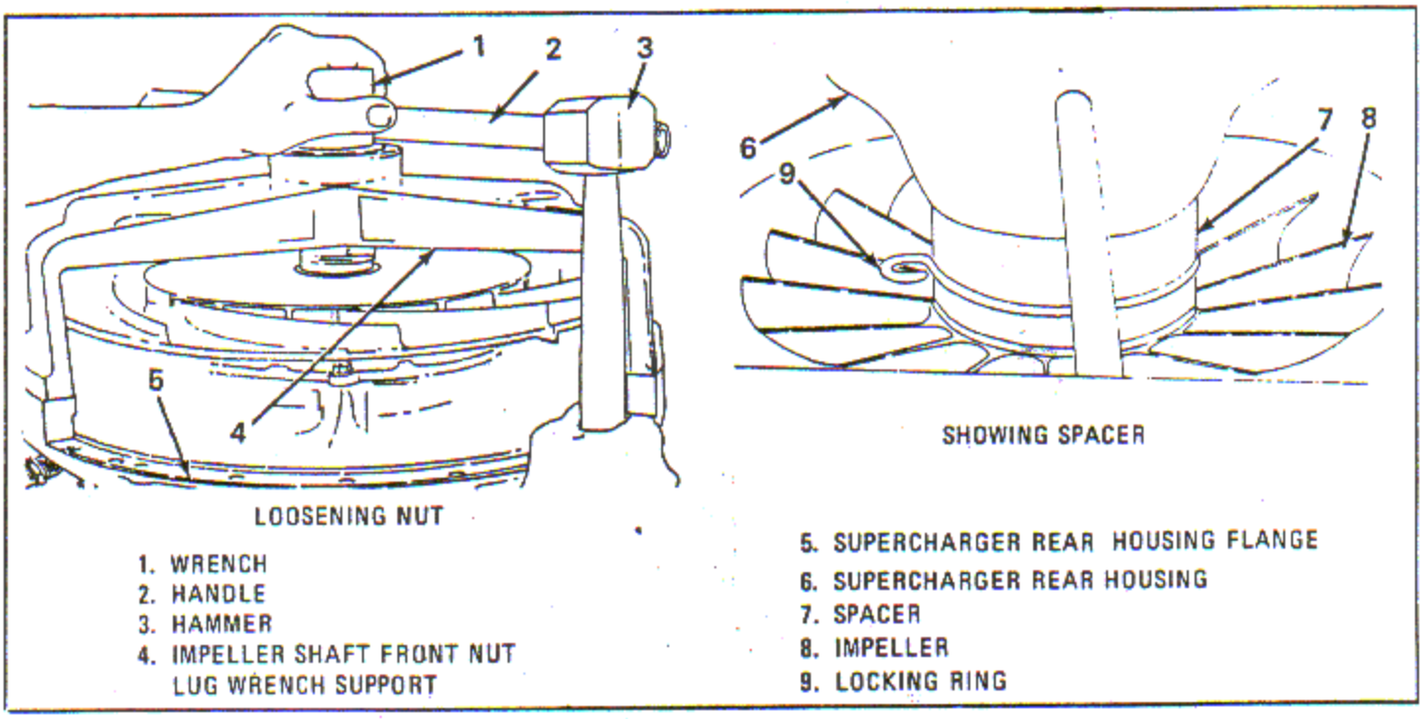

LOOSENING NUT

SHOWING SPACER

1. WRENCH
2. HANDLE
3. HAMMER
4. IMPELLER SHAFT FRONT NUT LUG WRENCH SUPPORT
5. SUPERCHARGER REAR HOUSING FLANGE
6. SUPERCHARGER REAR HOUSING
7. SPACER
8. IMPELLER
9. LOCKING RING

Figure 4-45. Loosening Impeller Shaft Nut, and Showing Spacer Between Impeller and Supercharger Rear Housing

f. Use hydraulic puller assembly details to remove impeller shaft. Install adapter A into the upper end of impeller shaft. See figure 4-46.

g. Remove the threaded collar from the screw of adapter B and insert the screw through adapter A.

h. Install adapter C into the lower end of the shaft and secure the assembly with the threaded collar.

i. Install puller over the bushing of adapter B at the upper end of shaft, locking the bushing in the slot of puller.

j. Screw in jack, attach the pump and hose, and pull the shaft.

k. First man should operate the puller in rear of housing while second man steadies puller from the front of housing and takes the impeller assembly as the shaft is pulled out. The impeller front spacer, impeller, inducer, impeller rear spacer and the rear sleeve and ring assembly will come off as the shaft is pulled.

NOTE

Impeller shaft rear bushings without oil flats on the OD, do not require removal for cleaning of sludge in the oil passages.

4-67. DIFFUSER PLATE REMOVAL.

a. Turn the supercharger rear housing over. Remove the cotter pins and the five diffuser plate attaching nuts and washers.

b. Remove the diffuser plate and shim. Remove all remaining plugs from the supercharger rear housing.

NOTE

Remove the screw retaining the supercharger drain valve return tube extension tube and clip assembly to the supercharger rear housing. Refer to the applicable paragraph in Section VI for the inspection and repair of the above parts.

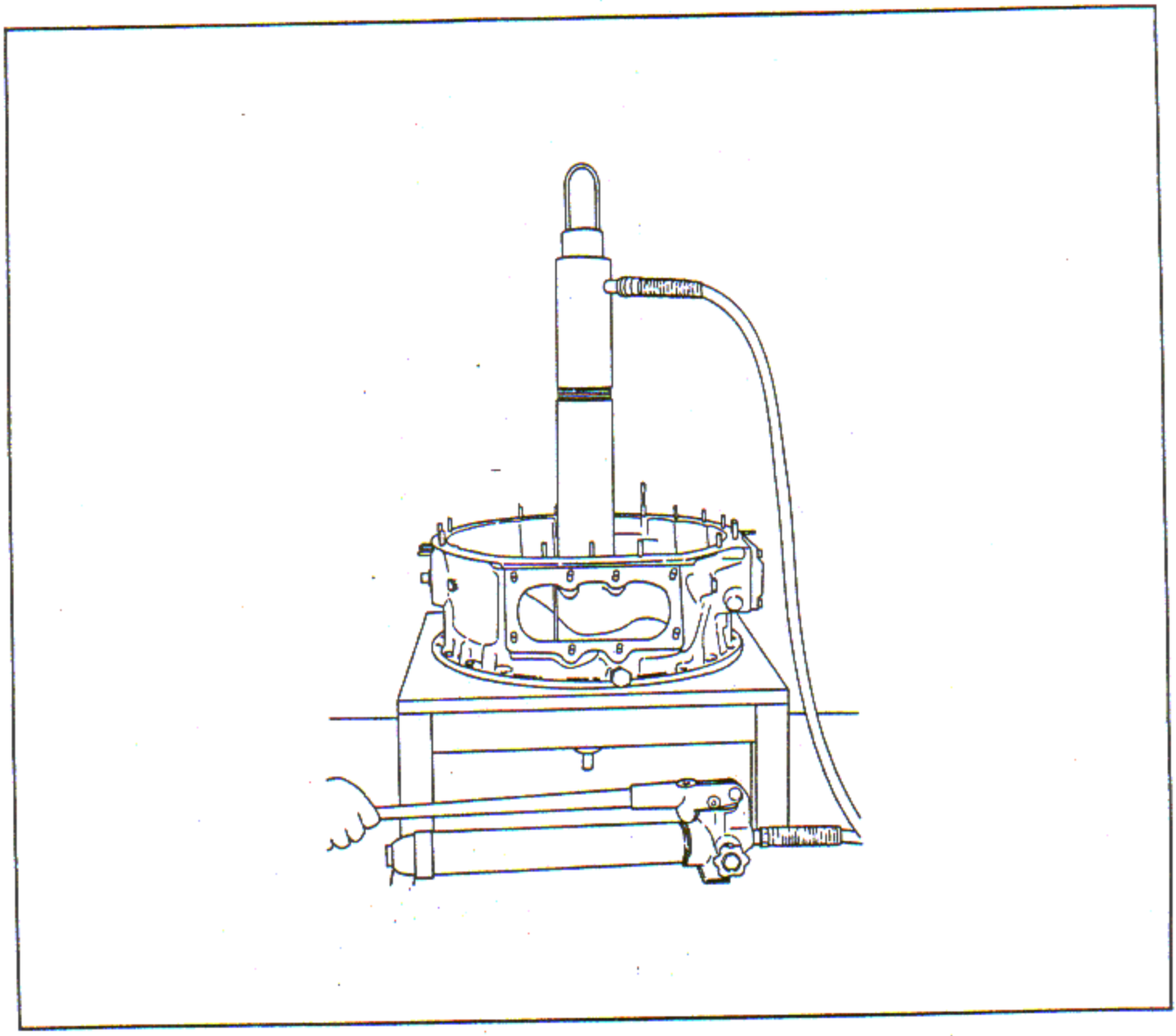

Figure 4-46. Pulling Impeller Shaft

4-68. REAR OIL PUMP DISASSEMBLY. (See tool groups 41, 85, 86 and 88.)

a. Remove the oil pump cover and the oil pressure pump drive and driven gear.

b. Remove the cotter pin from the oil pump drive coupling nut. Use wrench to hold the coupling and remove the nut with a suitable box wrench. See figure 4-48. Remove the end plate retaining screw (increased capacity pump only). Remove the pump end plate, gasket, oil scavenge pump drive shaft gears and driven gear.

c. Unscrew the oil pressure relief valve cap and take off the washer. Remove the adjusting screw lock nut using wrench, and remove the nut lockwasher. See figure 4-47. Unscrew the adjusting screw and remove the spring and valve. Remove the valve body with wrench, as shown in figure 4-47. Remove the valve lock ring on the increased capacity pump.

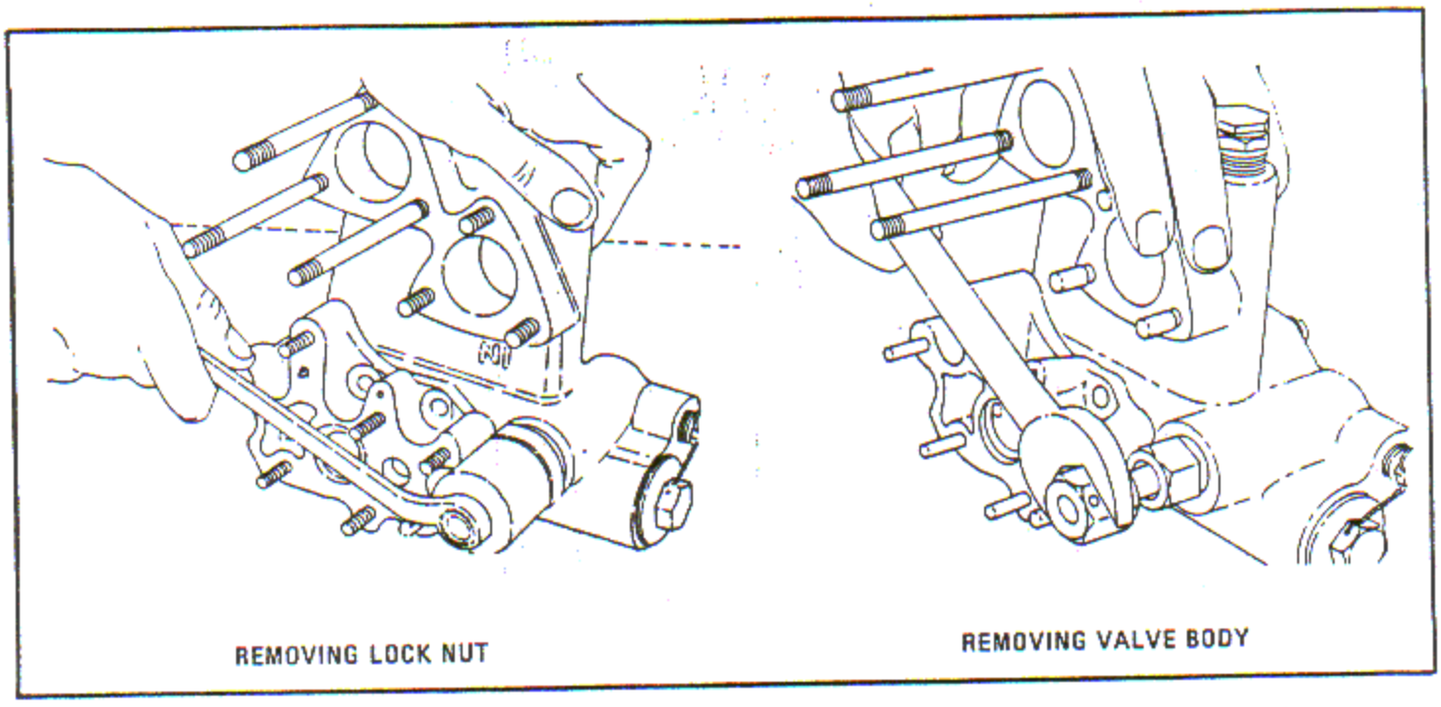

Figure 4-47. Removing Adjusting Screw Lock Nut and Oil Pressure Relief Valve Body

d. Remove and disassemble the oil pump check valve.

e. Remove the oil temperature gage connection substituting plugs, rings, and bushings. Remove the pre-oil pressure connecting plug.

f. Using wrench, remove the scavenge oil strainer housing plug. Remove the check valve spring and ball (increased capacity).

g. Remove the scavenge oil strainer assembly taking care not to damage the pump body mating surfaces. Disassemble the strainer as stated in paragraph 5-55 (increased capacity pump only).

h. Remove the four attaching nuts and washers from each of two tachometer substituting covers. Remove the covers and gaskets and separate the housing covers from the housing and remove the gears.

i. Pull the two oil seals (3, figure 4-49) from the cover (4) with puller (2). Turn the lock on the puller to release the clamps. Install the clamps through the oil seal and lock them in position. Remove the seal by turning the hex nut with a suitable wrench (1).

4-69. DUAL ACCESSORY DRIVE DISASSEMBLY. (See tool groups 40 and 52.)

a. Remove the upper and lower accessory drive gear oil seals (3, figure 4-49) from their covers (4) using puller (2).

b. Install the dual accessory drive idler gear (1, figure 4-50) and intermediate gear assembly (6) in fixture (4) and place in vise (5). Remove the attaching screws (2) using wrench (3). Separate the gears.

4-70. FUEL PUMP DRIVE SHAFT SUPPORT DISASSEMBLY. (See tool group 52.)

a. Remove the oil seal (4, figure 5-51) from the fuel pump drive shaft support (3) using puller (2).

4-71. TWO SPEED IMPELLER DRIVE SPRAG CLUTCH DISASSEMBLY (R1820-86A, -86B).

a. Remove the rear cover retaining nuts and washers. Refer to figure 7-50.

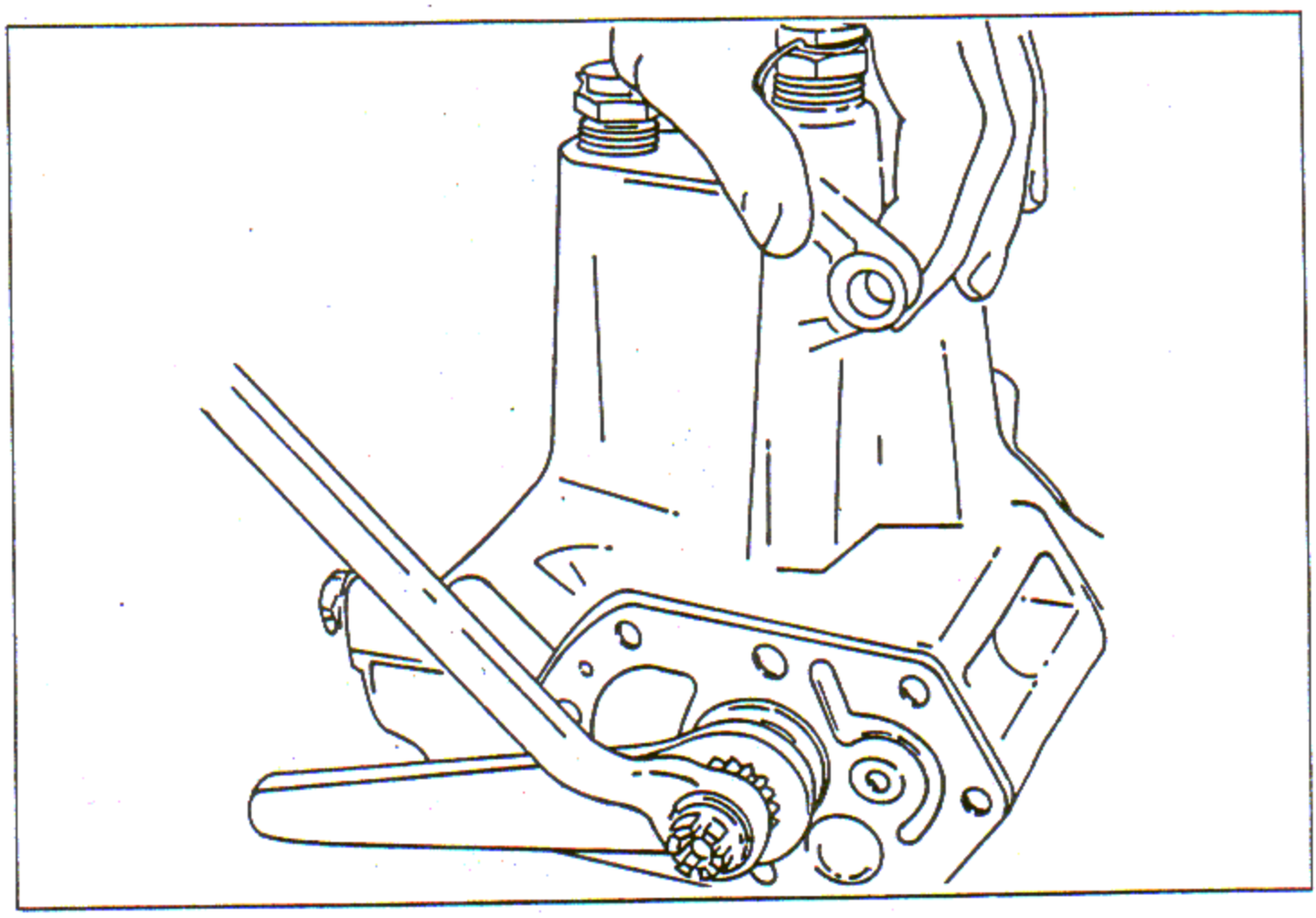

Figure 4-48. Loosening Oil Pump Drive Coupling Nut

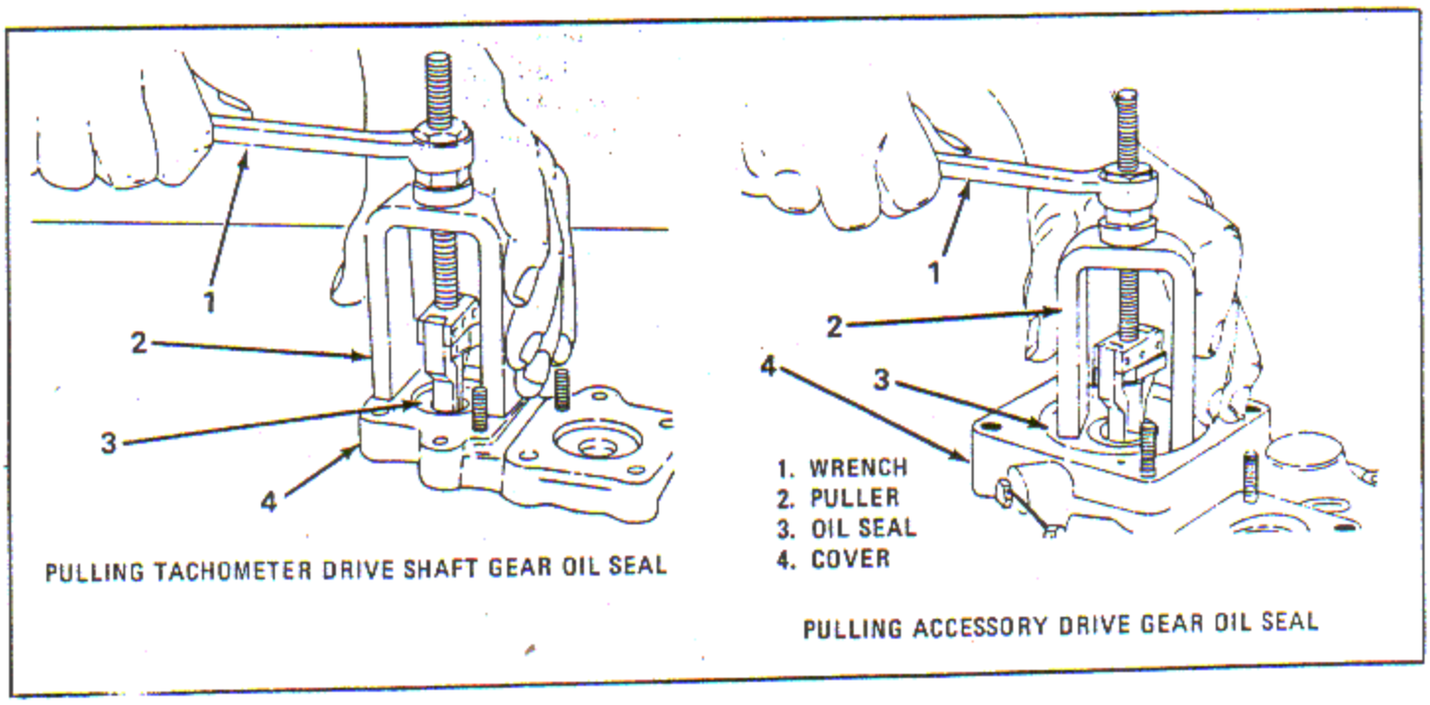

Figure 4-49. Pulling Tachometer Drive Shaft Gear Oil Seal and Accessory Drive Gear Oil Seal

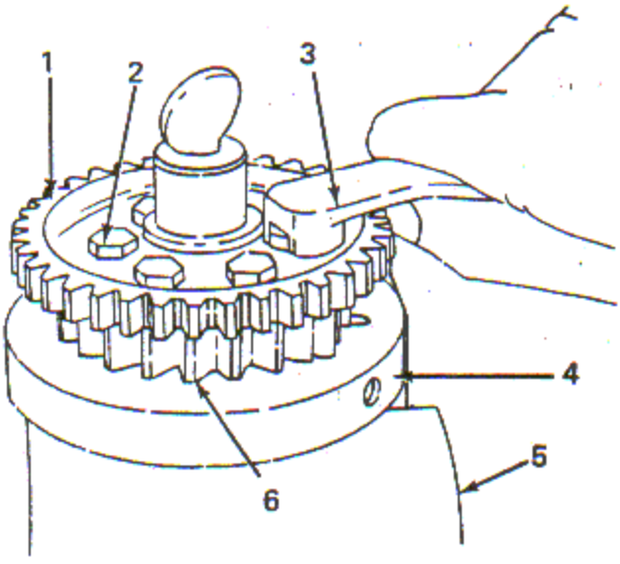

1. IDLER GEAR
2. SCREWS
3. WRENCH
4. FIXTURE
5. VISE
6. INTERMEDIATE GEAR

Figure 4-50. Removing Dual Accessory Drive Idler Gear to Intermediate Gear Screws

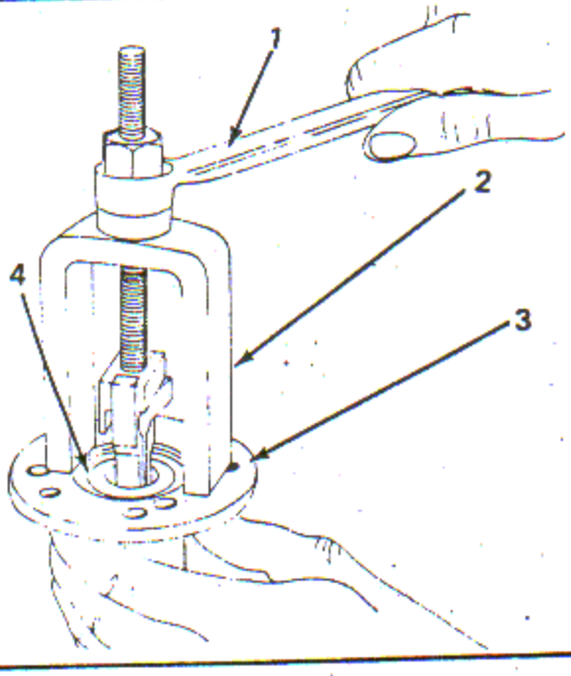

1. WRENCH
2. PULLER
3. SUPPORT
4. OIL SEAL

Figure 4-51. Pulling Fuel Pump Drive Shaft Oil Seal

b. Remove the four gear shafts installed in the cover.

c. Remove the rear cover from the rear housing.

d. Remove the four gears installed in the supercharger rear housing.

e. Remove the intermediate impeller drive shaft and pinion assembly.

f. Remove the accessory drive and starter shaft assembly.

NOTE

Impeller drive (sprag clutch) assembly is a matched assembly. Ensure that match numbers are engraved as shown in figure 4-52. If necessary, engrave match numbers.

g. Remove the intermediate impeller clutch drive gear and bushing assembly.

h. Remove the generator drive gear.

i. Remove the generator drive gear and adapter assembly from the disc and plate assembly.

j. Remove the sprag clutch discs, plates, housing, spring, spacer and washer from the rear cover.

4-72. SUPERCHARGER REAR COVER DISASSEMBLY (R1820-76 SERIES, -86A AND -86B). (See tool group 63.)

a. Remove the oil tank vent flange and gasket from the top of the rear housing cover. Remove the magneto drive oil seal attaching screws and the generator drive oil seal attaching screws, remove the oil seals.

b. Remove the attaching screws from the accessory drive and starter shaft oil seal packing and retaining ring in the center of the starter pad. Use three of the attaching screws to pull the ring. Remove the oil seal packing, starter coupling, spring and spacer.

c. Turn the cover over. Remove the cotter pins from the multi-plate clutch housing attaching nuts. Remove four of the nuts and washers and retain two nuts on the housing.

d. Press firmly on housing to counteract the clutch release spring, remove the two remaining nuts and washers from the housing. Remove the housing, multi-plate clutch adapter and clutch release spring. Remove the intermediate impeller drive gear shaft spacer and clutch thrust washer from the gear. Remove the clutch plates and discs from the rear cover.

e. Remove the clutch piston and sleeve using puller. See figure 4-53. Remove the piston from the sleeve.

4-73. SUPERCHARGER REAR COVER DISASSEMBLY (R1820-80 SERIES). (See tool group 62.)

a. Remove two nuts and washers and remove the oil tank vent flange and gasket from the top of the rear housing cover.

b. Remove the six screws from each magneto drive oil seal and take out the oil seal and gasket.

c. Remove the six generator drive oil seal attaching screws and remove the oil seal and gasket.

d. Remove the 12 attaching screws from the accessory drive and starter shaft oil seal packing retaining ring in the center of the starter pad. Use three attaching screws to pull the ring. Remove the accessory drive and starter shaft oil seal packing, starter coupling, spring and spacer.

e. Turn the cover over.

f. If necessary to remove the impeller drive gear support and bushing assembly, remove the cotter pins and the attaching nuts. See figure 4-53. Pull the assembly with puller.

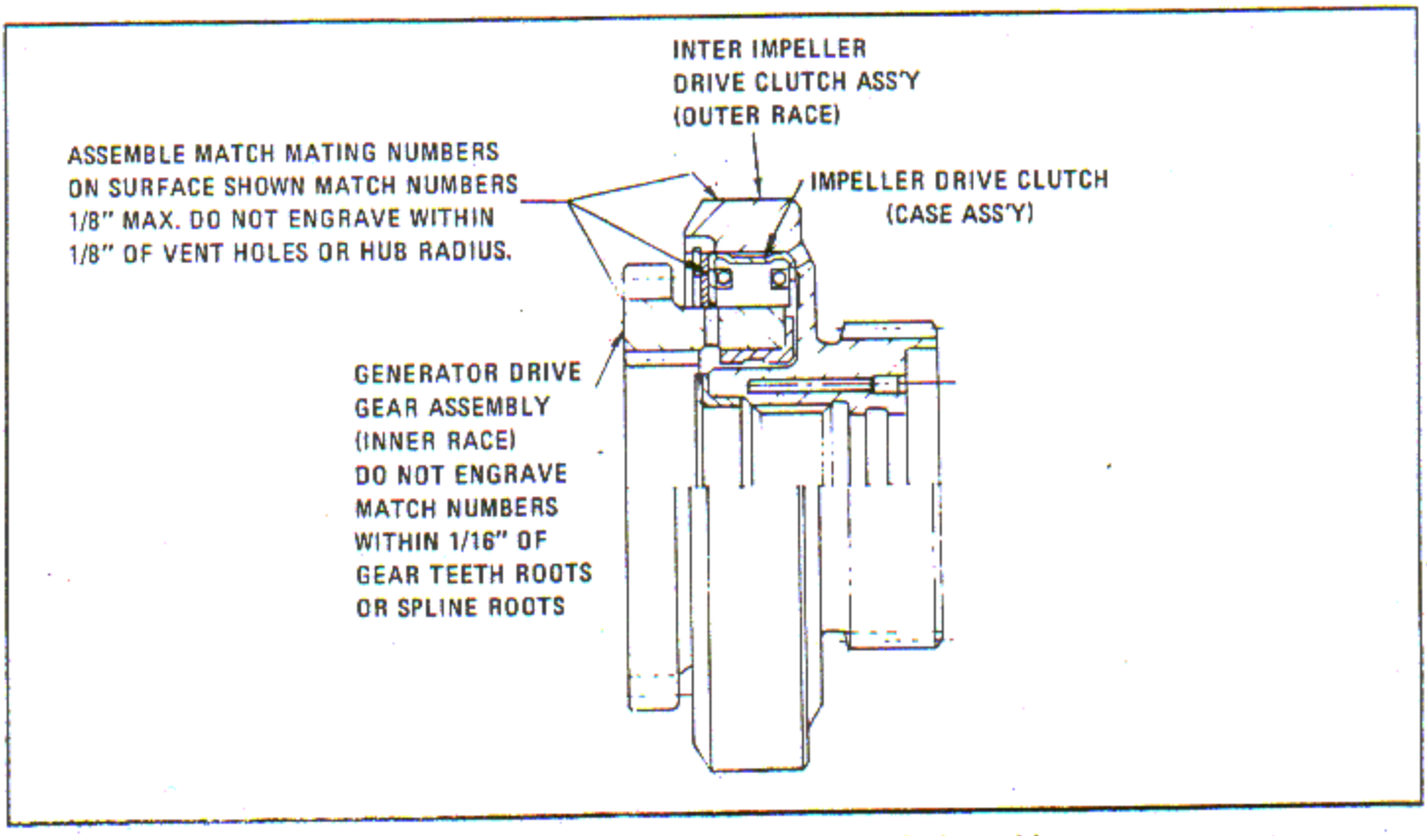

Figure 4-52. Impeller Drive Sprag Clutch Assembly

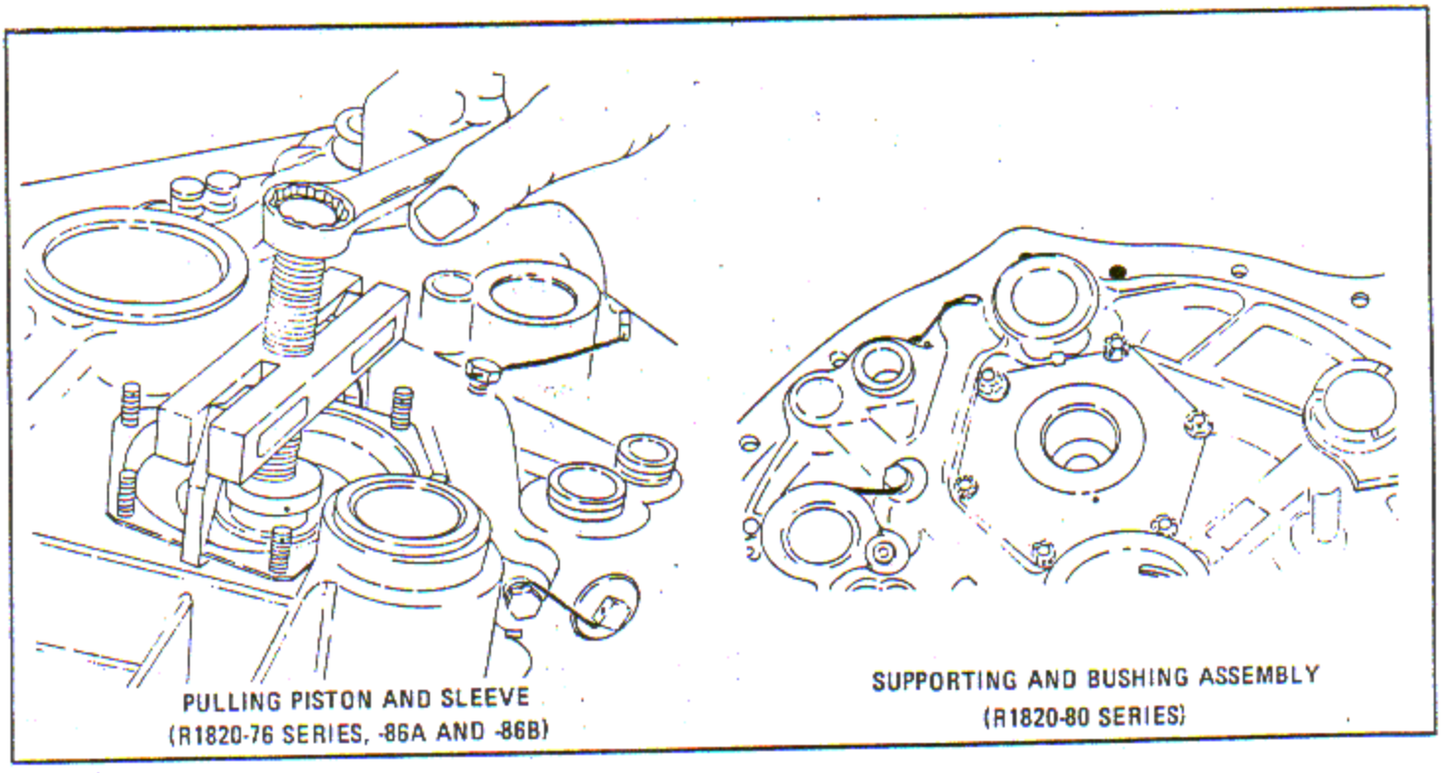

Figure 4-53. Pulling Multi-Plate Clutch Piston and Sleeve and Impeller Drive Gear Support and Bushing Assembly

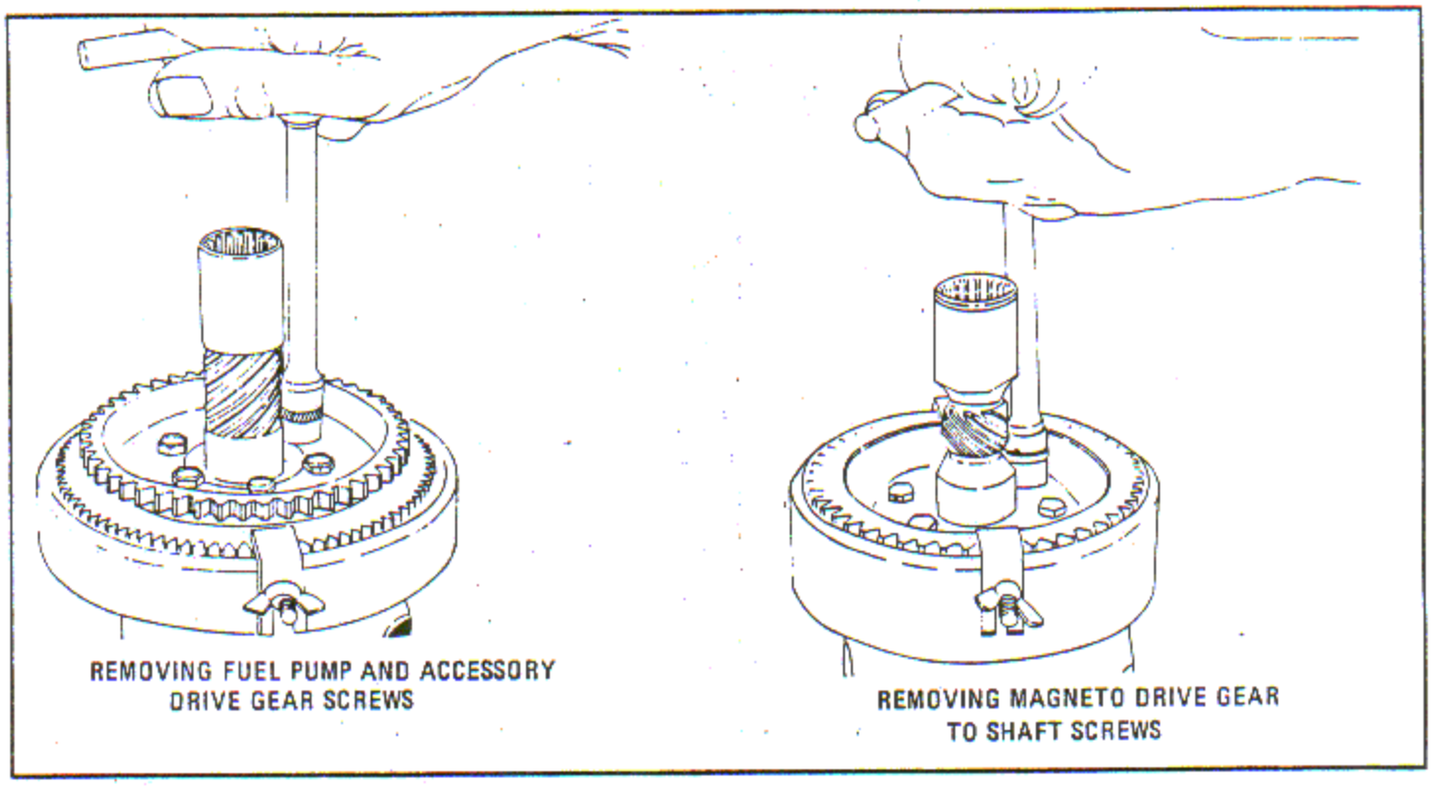

Figure 4-54. Removing Fuel Pump and Accessory Drive Gear Screws and Magneto Drive Gear to Shaft Screws

4-74. ACCESSORY DRIVE GEARS DISASSEMBLY. (See tool groups 51 and 80.)

a. The fuel pump and dual accessory drive gear and shaft assembly is placed in fixture. Install the fixture in a vise, remove the attaching screws, remove the shaft from the gear. See figure 4-54.

b. The magneto drive gear and magneto and gun synchronizer, impulse generator drive shaft assembly is placed in fixture and fixture is placed in vise.

c. Remove the attaching screws.

d. Remove the magneto drive oil seal collar using drift.

e. Remove the gear from the shaft.

f. Disassemble both magneto drive gears in the same manner.

4-75. ROLLER CLUTCH DISASSEMBLY (R1820-76 SERIES, -86A AND -86B).

a. Remove the retainer from the roller cage and remove the rollers.

b. Remove the cam and intermediate impeller drive gear shaft thrust washer from the cage.

4-76. IMPELLER INTERMEDIATE DRIVE GEAR SHAFT AND PINION CAGE DISASSEMBLY (R1820-76 SERIES, -86A AND -86B). (See tool group 64.)

a. Install the assembly in fixture, then install the fixture in vise. Straighten the tabs on the washers and remove the bolts. See figure 4-55.

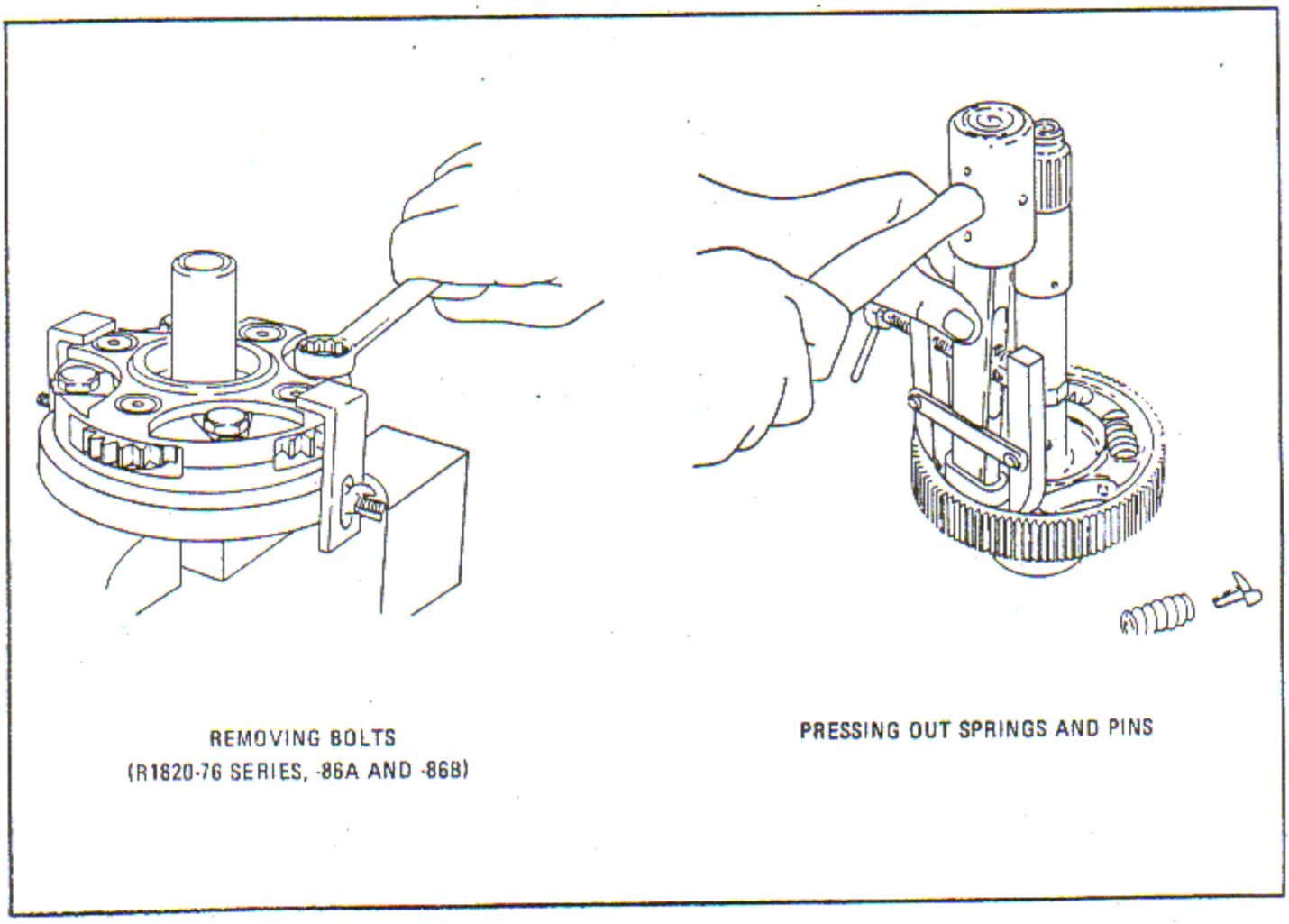

Figure 4-55. Removing Impeller Intermediate Drive Shaft Pinion Cage Bolts and Pressing Out Accessory Drive Gear Springs and Pins

b. Remove the assembly from the vise and fixture. Remove the bolts and separate the carrier. Remove the pinions and bushings and withdraw the shaft.

4-77. ACCESSORY DRIVE AND STARTER SHAFT DISASSEMBLY. (See tool group 5.)

a. Remove the screws that secure the accessory drive and starter shaft plate, remove the plate. Press out the accessory drive gear springs and pins using remover and installer. See figure 4-55.

b. Remove the ring from the small end of the shaft and the ring, spacer and plug from the other end. Rotate the accessory drive gear and remove it from the drive shaft.

SECTION V

CLEANING

5-1. GENERAL.

5-2. Clean all parts, after disassembly by following the instructions described in this section. Correct and thorough cleaning is of prime importance to accurate and careful inspections, overhaul and also satisfactory operations after overhaul.

5-3. Cleaning of the individual parts is important in that careful inspection is facilitated, and engine failures which might occur due to foreign material or particles plugging any of the various oil lines or interfering generally with the function of the engine may be avoided.

5-4. Separate parts that require different cleaners, soak periods and procedures. Caustic cleaners will damage aluminum parts and remove the protective coating from magnesium parts. Caustic cleaners will not harm high-alloy, heat-resistant and stainless steel parts. Strong caustics should not be used for cleaning parts from which aluminum and magnesium details cannot be removed prior to cleaning.

5-5. Identify parts by part number, model designation and engine serial number. Ensure that this identification is not removed during any of the cleaning operations, as this will provide a realistic record of part operating time in the engine.

5-6. Parts handling baskets should be provided with separators and bins to segregate and protect the parts.

5-7. Parts having pockets, recesses, grooves and annuli shall be placed in parts baskets in a manner that will reduce drag-out and entrapment of cleaning solutions. Final cleaning should be accomplished in a petroleum-solvent spray booth. Scrape the parts, if necessary, with soft metallic or plastic scrapers and non-metallic bristle brushes. Parts composed of similar metals requiring approximately the same cleaning time should be racked together in the same baskets. Parts which incorporate through holes such as the propeller shaft, crankshaft sections, starter shaft, push rod housings and push rods should be racked on end in the vertical position. Suspend or position the crankcase main sections, the supercharger front and rear housings, the crankcase front section and the front and rear sumps in their respective flight attitude. Place the pistons on their side in a parts basket with the piston pin holes in the horizontal position.

5-8. PRECLEANING.

5-9. EXTERNAL PRECLEANING.

a. An automatic washer is preferred for cleaning engines in large quantities. A solution comprised of one ounce of alkaline cleaner, Specification MIL-C-5543, for each gallon of water at 82°C (180°F) or petroleum solvent, Federal Specification P-S-661, at room temperature, shall be used in the machine.

b. When the number of engines to be processed is not large enough to warrant the use of an automatic washer, a hydro-steam blast gun shall be used to perform external cleaning. The cleaning solution consisting of 2 - 3 pounds of alkaline cleaner, Federal Specification P-C-436, for each 80 gallons of water, is drawn through the gun by a stream jet.

c. Deposits of corrosion-preventive compound which are extremely difficult to remove may be softened by spraying or brushing a mixture of one part cleaning compound, Specification MIL-C-25769, and eight parts kerosene, Federal Specification VV-K-211, on the engine prior to the alkaline rinse.

5-10. INTERNAL PRECLEANING.

a. With the engine inflight position, remove the drain plugs from the front sump and supercharger rear housing and drain the oil from the engine. Rotate the propeller shaft to facilitate drainage.

b. Place the engine in a closed booth incorporating an exhaust system which is suitably protected by fire fighting equipment and flush the engine with petroleum solvent, Federal Specification P-S-661.

c. After flushing the engine internally, drain all of the remaining solvent. The engine stand may be rotated to ensure maximum drainage of pocketed solvent from the engine.

5-11. HEAVY SLUDGE REMOVAL. Prior to degreasing with solutions, remove any heavy sludge deposits from the parts using soft metallic or plastic picks and scrapers.

5-12. DEGREASING.

5-13. GENERAL. Degreasing is employed primarily to prevent contamination of the cleaning agents and/or solutions used in subsequent cleaning operations. The most common methods for degreasing are in paragraph 5-14 through 5-17.

WARNING

Adequate ventilation is necessary to reduce to a minimum the exposure of personnel to trichlorethylene vapor. Contact of the skin with this solvent or the vapors should be avoided by wearing solvent-resistant protective equipment.

5-14. TRICHLORETHYLENE (VAPOR) METHOD. Degrease parts, using trichlorethylene, Specification MIL-T-7003, as follows:

a. Suspend parts to be degreased in the vapor of boiling trichlorethylene.

NOTE

The vapor condenses on the cool metal surfaces of the parts and dissolves the oil and grease. When the parts reach the temperature of the vapor, the cleaning action ceases. If further cleaning is necessary, the parts must be removed, cooled and replaced in the degreaser.

b. Degreased parts removed from the degreaer are dry and should be coated with corrosion preventive compound, Specification MIL-C-5545, unless the parts are to be processed immediately.

CAUTION

The pH, or relative acidity, of the trichlorethylene should be checked periodically. Under normal conditions there is no corrosive action of trichlorethylene; however, the solvent has an affinity for water and as the boiling point is lower than that of water, moisture tends to accumulate in the solvent, and is converted into hydrochloric acid with the resultant hydrolysis of the metals it contacts.

c. Safe limits and specific titration procedures must be obtained from the supplier of the solvent. Since restoration of the acidic trichlorethylene to a safe condition by the additions of inhibitors is not feasible, the contaminated solvent shall be entirely replaced with clean solvent.

NOTE

Thoroughly clean the degreaser prior to refilling with clean solvent.

5-15. PETROLEUM SOLVENTS. Use petroleum solvent, Federal Specification P-S-661. The two methods for cleaning parts with the aforementioned solvent are included in paragraphs 5-16 and 5-17.

WARNING

Provide adequate protection for the removal of fumes and the prevention of fires. When solvent is used as a spray, a ventilated exhaust booth should be available. Protective equipment shall be worn by personnel to reduce skin contact to a minimum.

5-16. SOLVENT SPRAY BOOTH. When the solvent spray booth method is employed, clean filtered solvent is sprayed onto the part to be cleaned in a method similar to spray painting. Utilize non-

metallic bristle brushes to loosen and remove residue from the parts. After cleaning, dry the part with a clean dry air blast.

5-17. SOLVENT WASHING TANK. When the solvent washing tank method is employed, remove the residue from the parts by the dipping and washing method. Use the non-metallic bristle brushes to break up and remove the sludge from the parts. After cleaning, blow the parts dry with filtered air.

NOTE

The solvent used to clean parts shall be drawn from a filtered source. Replace the solvent when it becomes dirty.

5-18. ALKALINE METHOD. Alkaline compound, Specification MIL-C-5543, is mixed with water and applied at a temperature of 82 - 93°C (180 - 200°F). Application may be made by spray washing or in a steam cleaning machine, followed by a hot water rinse.

5-19. CARBON REMOVERS.

WARNING

Carbon removers are toxic and caustic. Use adequate ventilation. Avoid prolonged or repeated breathing of vapors or contact with the skin. Suitable protective gloves, apron and goggles should be worn.

5-20. GENERAL. Solvent type carbon removal compounds contain various solvents, soaps, wetting and inhibiting or corrosion preventive agents. A water seal is placed on top of the organic solvent (carbon remover) to reduce loss of volatile solvents and to retain the effectiveness of the carbon remover compound whether the solution is used HOT or COLD. Mild agitation of the compound will accelerate the cleaning process; however, the agitation must not destroy the effectiveness of the water seal layer. The water seal layer is not designed to perform a cleaning operation. Parts immersed in solution should be removed immediately after cleaning since a long period of immersion may cause discoloration and/or have an adverse effect on the metal. The immersion time depends upon the condition of the parts and the type and amount of soil to be removed. Usually one to three hours is sufficient immersion time.

CAUTION

It is essential that only solvent type carbon remover solutions, such as Turco Transpo for cold type or Turco Carbostrip for hot type, (Turco Products, Inc., Los Angeles, California) be used in accordance with the procedures and recommendations as outlined in this section. Tests for serviceability, maintenance and control of the solutions must be made as specified by the manufacturer to prevent corrosive attack on metals, such as magnesium, silver, lead, lead-tin, bronze and cadmium. Any deviation from these recommendations will result in damage to the parts and will require that they be either scrapped or stripped and replated.

5-21. COLD SOAK METHOD.

a. Use Turco Transpo (Turco Products, Inc., Los Angeles, California) carbon remover or equivalent. The solution is composed of two layers, the bottom layer consisting of the cleaning solvents and the top layer an inhibited water seal.

b. Use the solution from room temperature up to a maximum of 43°C (110°F).

c. Prepare the water seal in a separate container.

NOTE

If available, distilled or soft water (less than 10 parts per million hardness of calcium carbonate) should be used for the water seal.

d. Dissolve 1 - 5 ounces of potassium chromate (K_2CrO_4) per gallon of water. The seal should comprise 10 percent of the total solution.

e. Add the potassium chromate slowly, and stir until completely dissolved.

f. Ensure that the carbon remover compound evaporation is minimized by adding the water seal as soon as possible after the carbon remover has been placed in the tank.

g. Allow one hour for the layers to separate before using.

NOTE

Immerse parts entirely in the solvent layer. The seal layer is not designed to perform a cleaning operation.

h. Depth of the water seal should never drop below three inches.

5-22. HOT SOAK METHOD. The hot soak method is used primarily to soften and remove carbon and fuel gum deposits from engine parts by immersion in a heated solution.

a. Use Turco Carbo Strip (Turco Products, Inc., Los Angeles, California) carbon remover or equivalent. Operate at a temperature of 60 - 71°C (140 - 160°F).

b. The compound, as received from the manufacturer does not have a water seal. Add a water seal, consisting of approximately 25 percent of the total volume of the compound.

c. Place the compound in the tank. Maintain the water seal to a depth of 4 - 6 inches, depending on the surface areas and depth of the compound in the tank.

d. Ensure the part is entirely covered by the carbon remover and is not in the water seal layer.

e. Best results may be obtained from the carbon removing compound by removing the work from the tank when 1/2 of the soak period has been completed. Rinse using procedures outlined in paragraphs 5-24 through 5-26 to remove the loose carbon and allow better penetration of the remaining deposits. Resoak work for remaining soaking period, and follow rinse procedure as previously outlined.

CAUTION

Do not clean parts containing rubber components or fiber or nylon inserts in the carbon remover compound.

NOTE

A cold water rinse is not desirable as it will leave a film of carbon remover on the part.

f. Apply a protective coating of corrosion preventive compound, Specification MIL-C-5545, to all ferrous parts.

5-23. RINSE AFTER CARBON SOAK. Any of the following methods (paragraphs 5-24 through 5-26) giving preference in the order listed shall be used to prime parts after the carbon remover soak.

5-24. Use an industrial type washing machine with three or more stages. Use one part compound, Specification MIL-C-25179 to 20 parts of water at 77 - 87°C (171 - 189°F) in the first stage. Use 1/2 to 1 ounce of alkaline cleaner Specification MIL-C-5543, for each gallon of water at 77 - 87°C (171 - 189°F) in the second stage. Use 0.5 percent soluble oil, Specification MIL-C-4339, at 77 - 87°C (171 - 189°F) in the third stage.

5-25. Utilize a single stage washer, soak tank, or hand spray gun, and an approved solvent spray booth using petroleum solvent Federal Specification P-S-661.

5-26. Use a single stage wash tank or soak tank employing 1 - 1.5 ounces of alkaline cleaner, Specification MIL-C-5543, for each gallon of water at 77 - 87°C (171 - 189°F). Follow by a rinse of 0.5 percent soluble oil, Specification MIL-C-4339, at 77 - 87°C (171 - 189°F).

NOTE

The use of a cold water rinse after a carbon remover soak is not desirable.

5-27. SAND BLASTING. Sand blasting is used to remove any hard carbon or lead deposits on the parts after being processed through the carbon remover.

a. A standard sand blast-type cabinet with an overhead exhaust is suitable for sand blasting. The recommended air pressure is 60 - 90 psi, and the abrasive material should be Grade 120 round medium white silica sand.

b. After sand blasting, use compressed air to remove dust residue from the part.

c. A petroleum solvent rinse may be used after the air blow-off for additional cleaning of parts.

5-28. ALUMINUM OXIDE (DRY BLAST). Aluminum oxide is an artificial abrasive used in a manner similar to sand blasting. It may be used to remove all types of residue, such as rust, corrosion and heat scale. The blast stream should be directed at an angle to sweep the surface to be cleaned. Do not allow the nozzle to dwell in one location.

CAUTION

Care must be exercised when blasting to avoid removal of an excessive amount of metal from the part being cleaned.

5-29. VAPOR BLAST (LIQUID HONE). Vapor blasting is used for the removal of hard carbon deposits and heat scale from engine parts where a fine finish is required and for parts with complex shapes. An unlimited number of finishes can be produced by changing abrasives, altering air pressure or gun distance, and the amount of abrasive used in the solution.

a. Hold the tip of the gun approximately 2.5 - 3 inches from the surface area of soft metal or thin sheet.

b. Direct the blast stream at an angle to sweep across the surface of the work, and do not allow the nozzle to dwell in one location. Ordinary steel parts will require 60 - 100 psi air pressure.

NOTE

A constant, controlled air pressure must be used to ensure uniform results.

c. After vapor blasting, rinse the part in petroleum solvent and air blow dry.

5-30. TUMBLAST. Tumblast may be used as an alternate method of cleaning intake and exhaust valve, valve spring washers and exhaust pipes. Protect the stems of intake and exhaust valves with rubber sleeves during the cleaning operation. Instructions on tumblasting may be obtained from the manufacturer, Wheelabrater Corporation, Mishawaka, Indiana. Use angular steel grit No. G80 (Pittsburgh Crushed Steel Co., Pittsburgh, Pa.) for this operation.

5-31. SOFT GRIT BLASTING. Soft grit blasting is used to remove any hard carbon or lead deposits remaining on the parts after being processed through the carbon remover. The parts should be degreased (trichlorethylene-method), paragraph 5-14, to remove all evidence of grease and oil and then thoroughly dried prior to being soft grit blasted.

CAUTION

Under no circumstances is abrasive blast cleaning to be used on engine bushings or bearings.

a. The standard sandblast-type cabinet with an overhead exhaust is suitable for soft grit blasting. The recommended air pressure is 65 - 85 psi, and is dependent upon the type of nozzle and grit used. Some of the materials suitable for soft grit blasting are apricot pits, walnut shells, peach pits or processed wheat ground to the proper mesh size.

b. Precautions must be taken to exclude any foreign material from the soft grit, to prevent damage of the parts during the blasting cycle.

c. After soft grit blasting, use compressed air to remove dust residue from oil passages, recesses and exposed surfaces of the parts.

d. Rinse in petroleum solvent after the compressed air blow-off for additional cleaning of the parts.

5-32. VACU-BLASTING. Vacu-blasting may be used as an alternate method for removing corrosion and combustion residues from aluminum, magnesium and steel parts as follows:

a. Circulate MIL-G-9954A glass beads through the vacu-blast system.

b. Vacu-blast the parts until all the scale, oxide, carbon deposits and other foreign materials have been removed.

c. Blast clean with compressed air.

d. Rinse in petroleum solvent after the compressed air blow-off for additional cleaning.

5-33. BEARINGS.

5-34. SILVER, BRONZE OR LEADED BEARING SURFACES. Silver, bronze, lead and lead-tin plated surfaces of bushings or bearings may be cleaned in carbon remover solutions, then washed in clean petroleum solvent, Federal Specification P-S-661 and dried with compressed air.

CAUTION

Under no circumstances is abrasive blast cleaning to be used on engine bushings or bearings.

5-35. ROLLER AND BALL BEARINGS. Disassemble the roller and ball bearings. Demagnetize the bearings prior to cleaning. Bearings with hard carbon deposits may be soaked in the carbon remover and then flushed thoroughly with clean petroleum solvent, Federal Specification P-S-661, to remove all evidence of dirt and carbon deposits. After cleaning, coat the bearings with corrosion preventive oil, Specification MIL-C-5545.

CAUTION

Exercise extreme care during the cleaning and flushing operation to prevent damage to the bearings. Do not permit bearing to spin freely under air or spray pressure.

NOTE

VV-L-800 (MIL-L-644) preservative compound may be used instead of MIL-C-5545 for temporary preservation (not to exceed 21 days) of roller and ball bearings.

5-36. INTERNAL PASSAGES.

5-37. GENERAL. Oil tubes, recesses, grooves and passages not accessible for direct cleaning, should be flush-washed with petroleum solvent, Federal Specification P-S-661. Remove plugs where necessary to permit thorough washing of the passages. If sludge or carbon deposits cannot be removed by flushings, use a soft metallic or wood scraper.

5-38. CRANKSHAFT REAR END, OIL PASSAGE CLEANING.

a. Determine whether the rear crankshaft has oil passages drilled to the counterweight holes either visually or by probing with a right angle stylus. Some sludge deposits may be extremely hard and may require considerable force on the stylus to ascertain the presence of an oil passage in the counterweight side of the recess for the accessory drive coupling.

b. Rear crankshafts which have oil passages to the counterweight bushing holes, the counterweight bushings shall be removed to permit clean out of the passages. These bushings may be reinstalled afterward in the same holes and in the same position in those holes as originally installed if the specified pinch fit can be achieved and the bushings are otherwise serviceable.

c. Drill sludge from the two passages to the bushing holes using a bit no larger than .1875 inch. No metal is to be machined from the crankshaft during this operation.

d. Insert a 1/8 inch brass rod through one of the passages and force it into the adjoining larger passage opening a route for pressure spray clean out of the passages.

e. Pressure spray kerosene or suitable solvent through the passages until cleaned out. Inspect passages with light and mirror for cleanliness. Ascertain that no metal particles remain trapped in or around the passages and that no foreign matter or residue remains in the passages.

CAUTION

The bushings removed in step b. above are bored at a slight angle; therefore, reinstallation must result in their positioning being identical to that when they were originally installed and bored.

5-39. CYLINDERS.

5-40. CYLINDER HEAD.

CAUTION

Prior to grit blasting, mask the cylinder skirt, cylinder mounting flange, spark plug inserts, rocker box surfaces, rocker arm shaft bushings and all other studs, bushings or fittings. Provide suitable protection for the cylinder barrel fins during the grit blasting operation.

a. Soft grit blast interior and exterior cylinder head surfaces. Use a suitable protector in the cylinder bore. If soft grit blasting fails to remove external oil stains, blast the exterior of the cylinder head using a maximum air pressure of 55 - 60 psi and a mixture of 50 percent sand and soft grit such as wheat or walnut shells.

NOTE

Remove any soft grit blast residue with compressed air.

b. Remove carbon and lead deposits that accumulate in the annulus between the cylinder head and the end of the cylinder barrel, with a small power driven wire brush. Ensure that the wire brush does not contact the walls of the cylinder barrel or valve seats. Clean the outside of the attaching flange with the power driven wire brush.

c. Polish the intake and exhaust valve guides using an air gun and abrasive cloth, Federal Specification P-C-451, Grade 320, on a split quill.

d. Wash the cylinder thoroughly in petroleum solvent, Federal Specification P-S-661, and blow dry.

e. Apply corrosion preventive compound, Specification MIL-C-5545, to all ferrous parts.

5-41. CYLINDER BARREL CLEANING. (See tool group 36.)

a. Wash cylinders using automatic power brushing machine and pilot holding pallet to provide consistent and complete cleaning of the cylinder barrel.

NOTE

Ensure that adequate filtration of the cleaning solvent is provided.

b. Inspect each cylinder barrel for cleanliness, paying particular attention to the recess at the end of the barrel ID and all the other areas where grit and other contaminants may be trapped.

c. Wipe the barrel and skirt with a clean, dry, lintless cloth. Coat all steel surfaces with a suitable internal corrosion preventive compound.

5-42. IGNITION HARNESS CLEANING.

a. Disassemble the ignition harness prior to cleaning.

b. Using a cloth dampened with trichlorethylene, wipe clean the cable, sleeves and any rubber-on-rubber components.

c. Clean metal components by immersing in degreaser and blow dry using compressed air.

5-43. MEASURE CONTAMINANTS IN CYLINDER BARREL. This instruction is provided to establish an effective control on cylinder barrel

cleanliness by measuring the amount of residual contamination on the barrel ID wall. This procedure is recommended as a periodic check on the efficiency of cylinder barrel cleaning procedures and equipment. It is to be conducted on a cylinder selected at random which has been completely overhauled, cleaned and is ready for installation. A maximum residual dry weight to 10 milligrams is acceptable. Deposits weighing less, however, are obtainable and should be achieved.

a. Hold cylinder at an oblique angle with base in a clean, white enameled, 8 x 10 inch or larger photographic tray. Wash down cylinder wall with petroleum solvent, Federal Specification P-S-661, starting at the upper end of the barrel and working downward. Scrub the area being washed with a neoprene scraper to dislodge adhering solids. Continue washing downward until the entire cylinder barrel has been covered. All the deposit will remain in the tray with a large amount of solvent.

b. Reduce the volume of solvent by evaporation on a steam table or hot plate. Observe proper precautions for the vapor released. As evaporation proceeds, agitate the tray by rocking and continue washing with solvent to move the deposit into one corner of the tray.

c. Reduce the volume to three to five milliliters by evaporation and transfer to a weighed centrifuge tube. A small glass funnel may be needed for this operation. Wash the tray, catching washings in centrifuge tube.

d. Centrifuge until all solids are precipitated.

e. Remove the liquid in the centrifuge tube with a syringe or vacuum bottle. Add fresh solvent and stir vigorously.

f. Centrifuge again.

g. Repeat washing and centrifuging at least three or four times until the oily components are washed out. After final centrifuging and syphoning, place the tube in a drying oven or sand bath on a hot plate. Evaporate until dry.

NOTE

If the solids appear oily and not powdery dry, repeat washings with more solvent.

h. Weigh dry centrifuge tube with deposit and calculate weight of the deposit.

5-44. SPARK PLUG INSERT THREADS. (See tool group 33.)

a. Use spark plug insert thread cleaning tool to remove hard carbon deposits on spark plug insert threads.

b. Remove any loose carbon with compressed air. Wash the cylinder thoroughly with petroleum solvent and dry.

NOTE

Do not use grease of any kind. Do not install a spark plug washer.

c. If the spark plug insert has been distorted, or if the threads have been damaged, true the threads.

5-45. VALVE SPRINGS AND WASHERS. Hard grit blast the valve springs. Insert a rubber protector plug in the valve spring washer hole and hard grit blast the washer. Thoroughly rinse the springs and washers in petroleum solvent and air blast dry. Apply corrosion preventive compound, Specification MIL-C-5545, to the springs immediately after cleaning.

CAUTION

Ensure there is no entrapment of grit in the last coil of the valve spring.

NOTE

Resin coating of the inner and outer valve springs is not required.

5-46. INTAKE AND EXHAUST VALVES. Remove hard carbon and lead deposits from the valve heads by soft grit blasting, sand blasting or glass bead blasting using Grade B fine glass bead.

a. Prior to blasting, cover the valve stems with rubber tubing and masking or friction tape, to protect the operating portion of the valve stem. When sandblasting is used, use grade No. 120 round medium white silica sand and a maximum pressure of 50 psi.

CAUTION

Do not remove the engine varnish which has impregnated the surface of the valve as this would require additional removal of metal. The varnish improves the wearing characteristics of the stem. The varnish is recognized by its familiar dark stain.

b. If the carbon on the valve stem is of a heavy flaking variety, install the valve in a suitable lathe.

c. Polish the stem with grade No. 320 abrasive cloth, Federal Specification P-C-451. Use crocus cloth, Federal Specification P-C-458, wet with kerosene, Federal Specification VV-K-211, or petroleum solvent, Federal Specification P-S-661, for final polishing.

d. Thoroughly rinse the valve in clean petroleum solvent, Federal Specification P-S-661, and dry with an air blast.

5-47. PISTONS. Remove hard carbon from the interior and exterior surfaces of the piston by soft grit blasting. If necessary, clean the oil holes with the proper size drill held in a tap handle. Ensure that the ring lands and grooves are not damaged. To polish the piston, use crocus cloth, Federal Specification P-C-458, wet with kerosene, Federal Specification VV-K-211. Then rinse with clean petroleum solvent, Federal Specification P-S-661.

5-48. MAGNESIUM OR ALUMINUM PARTS. Hand brush the parts in petroleum solvent and blow dry. If the parts require painting, however, strip the oil paint by immersing in a hot carbon removing solution for not more than 30 minutes or in a cold solution for not more than four hours.

a. It is permissible to strip aluminum silicone paint from magnesium crankcases by use of soft grit blast.

b. Bearings, bushings and oil passages must be masked off prior to blasting. The provisions and precautions of paragraph 5-31 must be adhered to.

5-49. OIL STRAINER. (See tool group 90.)

5-50. OIL STRAINER DISASSEMBLY.

a. Install the oil strainer in fixture.

b. Compress the strainer elements and remove the retaining ring using pliers. See figure 5-1.

CAUTION

Compress the strainer elements only enough to permit removal of the retaining ring.

c. Ensure that the fixture sleeve is located on the fixture screw. Install the fixture sleeve and screw finger tight in the end of the strainer core as shown in figure 5-2. Align the flat on the sleeve (7, figure 5-3) with the flat on the strainer core (6), and keeping the flats aligned, tighten the screw (8) hand tight. Remove the strainer from the fixture and slide the strainer elements onto the fixture screw.

d. Remove the oil pressure relief valve ball (2, figure 5-4), spring (3), retaining disc (4) and ring (5). Use pliers to remove the retaining ring.

NOTE

Discard the retaining ring.

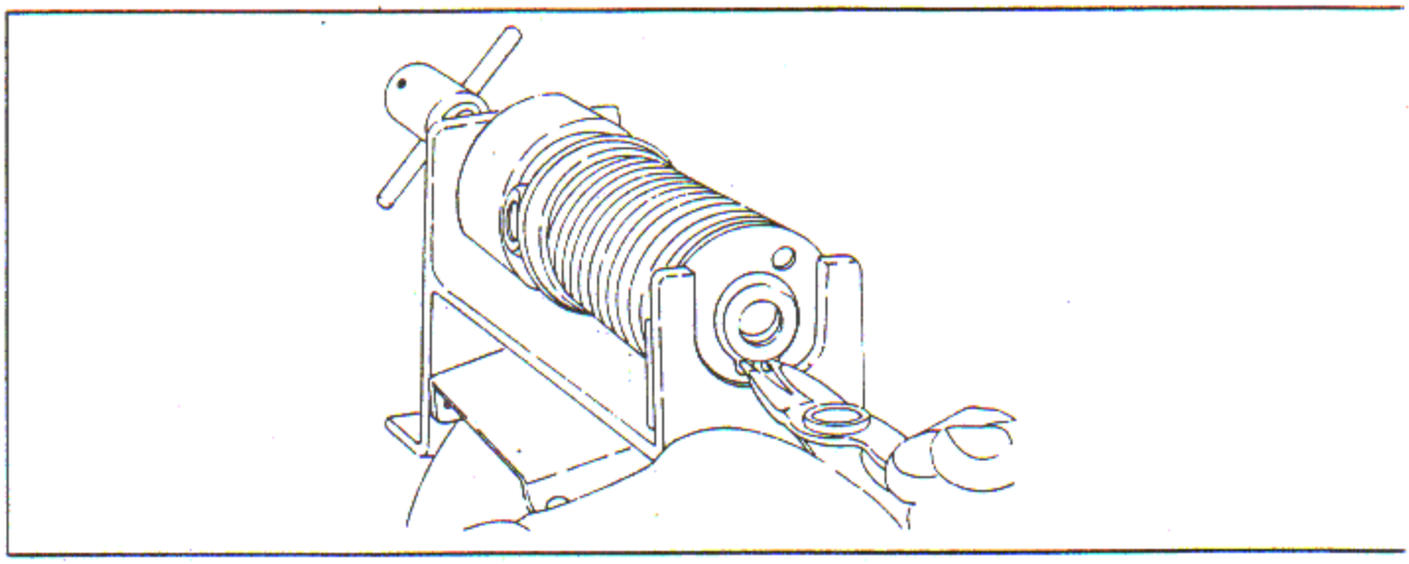

Figure 5-1. Removing Retaining Ring from Strainer Assembly

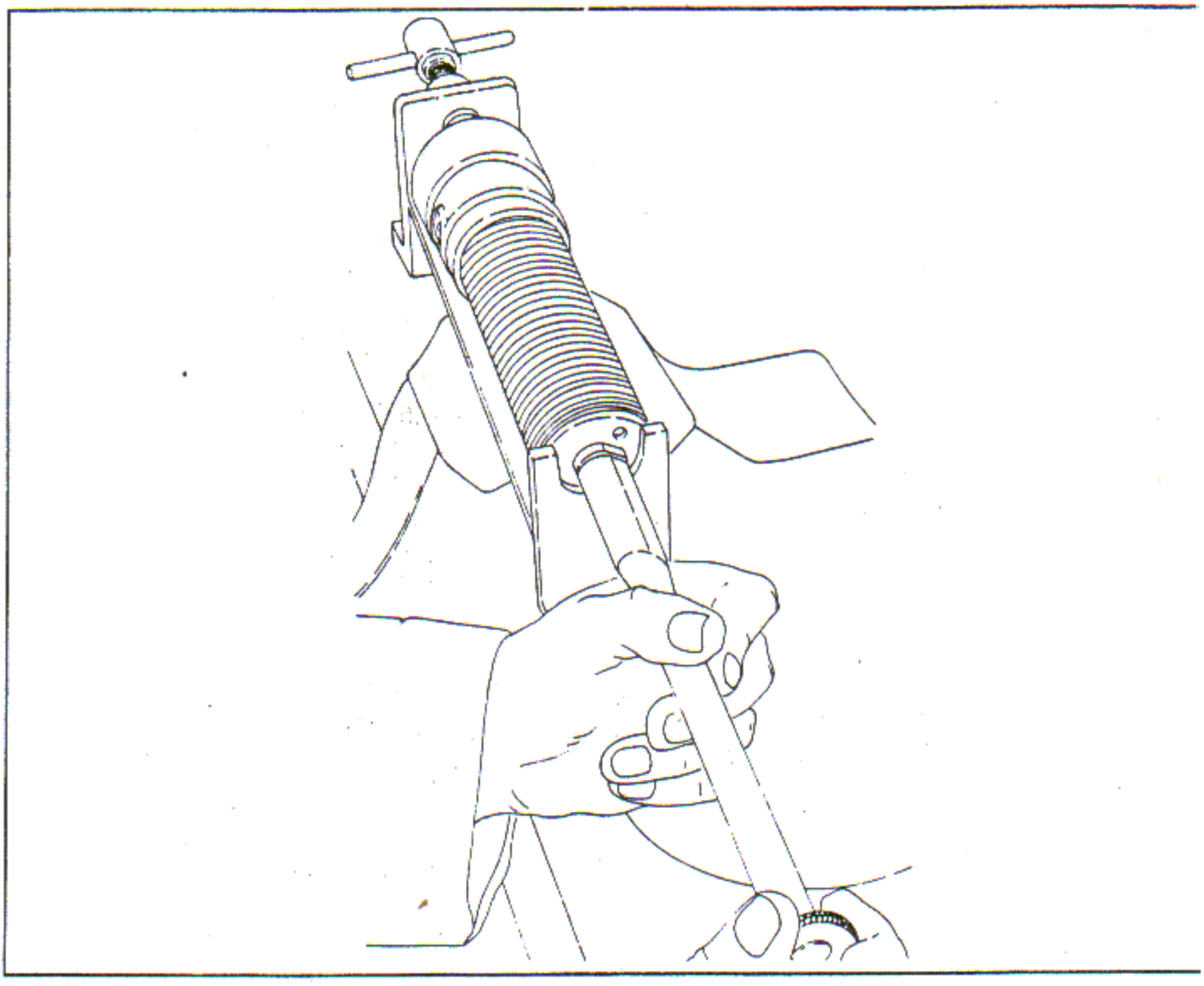

Figure 5-2. Screwing Fixture Screw and Sleeve into Strainer Core

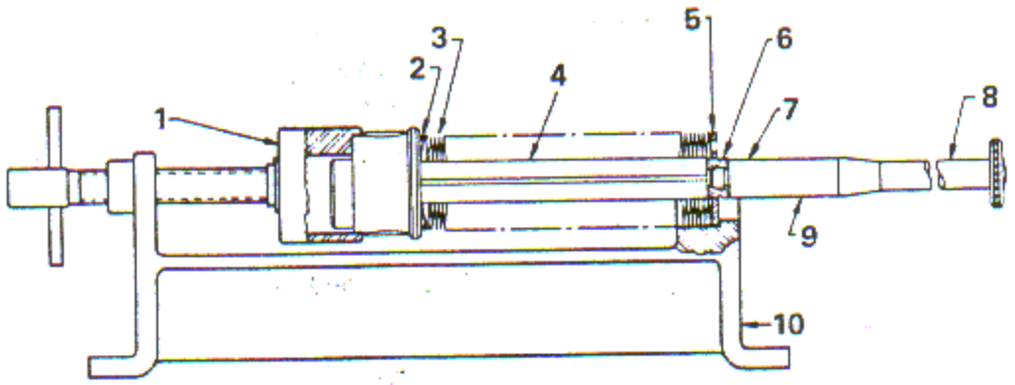

1. FIXTURE HEAD
2. BELLEVILLE WASHER
3. ELEMENTS
4. STRAINER CORE
5. RETAINING WASHER
6. FLAT ON STRAINER CORE
7. FLAT ON FIXTURE SLEEVE
8. FIXTURE SCREW
9. FIXTURE SLEEVE
10. FIXTURE

Figure 5-3. Oil Strainer and Fixture Assembly

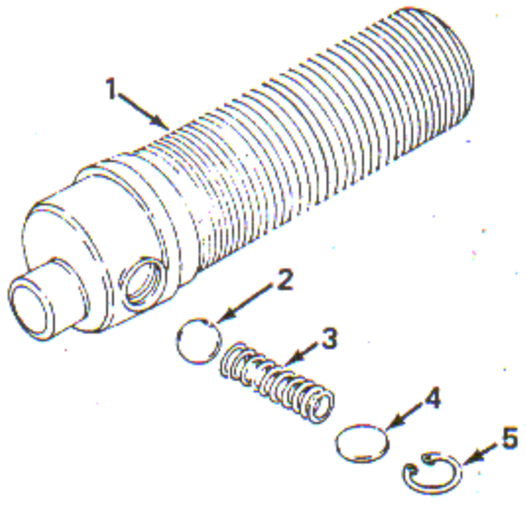

1. OIL STRAINER
2. RELIEF BALL
3. RELIEF SPRING
4. SPRING RETAINING DISC
5. RETAINING RING

Figure 5-4. Oil Pressure Relief Valve

e. Visually inspect the disc, spring, seat and ball for nicks, burrs, dents, wear and surface imperfections. Reject any parts in which these conditions are found.

f. Measure the relief valve spring tension. Refer to Reference 510, Table of Limits, Section IX.

g. Inspect the retaining ring groove for nicks, burrs, rounded shoulder or any material in the groove that would prevent proper installation or seating of the retaining ring.

5-51. OIL STRAINER CLEANING. The strainer elements may be cleaned using the solvents and procedures described in paragraphs 5-52 and 5-53.

WARNING

Exercise extreme care when using either Ardrox or Turco solutions. Extreme care must be taken to prevent contact with the skin or eyes. Use protective equipment at all times.

5-52. Brent Chemical Cleaners.

a. Immerse the strainer elements in a bath of trichlorethylene, Specification MIL-T-7003, for 10 minutes.

b. Remove the strainer elements from the trichlorethylene bath and allow to drain back to minimize drag-out loss and consequent dilution of the next solution.

c. Place the strainer elements in a tank, containing Ardrox 640, (Brent Chemical Products, Limited Commerce Rd., Brentford, Middlesex, England or equivalent) and maintain the temperature of Ardrox 640 solution at 71°C (160°F). Place the cover over the tank.

d. Apply air pressure to agitate the solution for a period of one hour. Remove the strainer elements and allow to drain. Wash the strainer elements with a high pressure steam jet and allow to drain.

e. Immerse in Ardrox 39/1 solution to remove any water. This will also preserve the elements by preventing rust.

5-53. Turco Chemical Cleaners.

a. Soak strainer elements in Turco Transpo (Turco Products, Inc., Los Angeles, Calif.) for approximately 15 - 20 minutes. Remove the strainer elements and allow to drain.

b. Soak the strainer elements in trichlorethylene, Specification MIL-T-7003, for 10 minutes. Remove and allow to drain completely.

c. Immerse the strainer elements in Turco solvent 3823, for 15 minutes. Maintain the temperature of the solution at 71°C (160°F). Remove and allow to drain.

d. Wash the strainer elements with a high pressure steam jet. Dip the strainer elements in petroleum solvent, Federal Specification P-S-661, to remove any trace of water. Coat the strainer elements with corrosion preventive oil, Specification MIL-C-5545.

e. Repeat the cleaning procedure if necessary.

5-54. OIL STRAINER ASSEMBLY.

a. Assemble the pressure relief valve ball, spring and retaining disc into the valve body. Using pliers, install a new retaining ring.

CAUTION

Ensure that the retaining ring is firmly seated in the valve body groove.

b. Install 47 strainer elements in holding rack, ensuring that the proper amount of elements are assembled in the strainer. See figure 2-8.

c. Place the retaining washer on the fixture screw and sleeve, followed by the 47 elements and one Belleville washer assembly.

d. Install the fixture screw and sleeve with the strainer elements and Belleville washer assembly, hand tight onto the strainer core end.

CAUTION

Ensure that the flat on the sleeve is aligned with the flat on the strainer core to preclude damage to the parts when compressing the strainer elements.

e. Slide the Belleville washer assembly, strainer elements and the retaining washer onto the strainer core and install it in fixture.

NOTE

Ensure that the fixture bearing and threads are lightly oiled and turn freely.

f. Compress the strainer elements only sufficiently to expose the retaining ring groove. Remove the fixture screw and sleeve and install the retaining ring using pliers. Remove the strainer from the fixture.

g. Install the strainer assembly in the strainer housing aligning the pin in the housing with the hole in the retaining washer.

h. Place a washer and seal ring on the puller screw and install it on the strainer cover. Install the cover on the strainer housing.

CAUTION

The main oil strainer incorporates a hardened washer attached directly to the housing assembly. Do not insert a hardened washer over the puller screw if a washer is welded into the counterbore in the underside of the cover.

5-55. INCREASED CAPACITY REAR OIL PUMP SCAVENGE STRAINER. (See tool group 90.)

5-56. Disassembly.

a. Install the strainer in fixture

b. Compress the screen elements enough to permit removal of the lock ring.

c. Remove strainer from the fixture.

d. Remove end plate, strainer elements and spring pack.

5-57. Cleaning. Clean the strainer elements as described in paragraph 5-51.

5-58. Reassembly.

a. Install spring pack, strainer elements and end plate on the cover core.

b. Place strainer assembly in fixture.

c. Compress the screen elements sufficiently to install the lock ring.

d. Remove strainer from fixture.

5-59. SELF-LOCKING NUTS. Degrease all nylon or fiber insert nuts in trichlorethylene, Specification MIL-T-7003.

CAUTION

Carbon removing compound containing phenolic bodies will deteriorate the nylon or fiber insert and render the nut useless.

5-60. PUSH ROD ASSEMBLY. (See tool group 42.)

5-61. PRESSURE FLUSHING.

NOTE

If less than 36 push rods are to be flushed, seal off the jet holes not being used with 8-32, 1/4 inch long cap screws.

a. Mount a pump (9, figure 5-5, Brown and Sharpe Manufacturing Co., Providence, R.I., Cat. No. 220, or equivalent), on a suitable wash tank (12). Connect a hose (11, Weatherhead Co., Cleveland, Ohio, Cat. No. H-17, length to suit, or equivalent), to the pump (9).

b. Insert a hose coupling plug (4, Weatherhead Co., Cleveland, Ohio, Cat. No. 01716 or

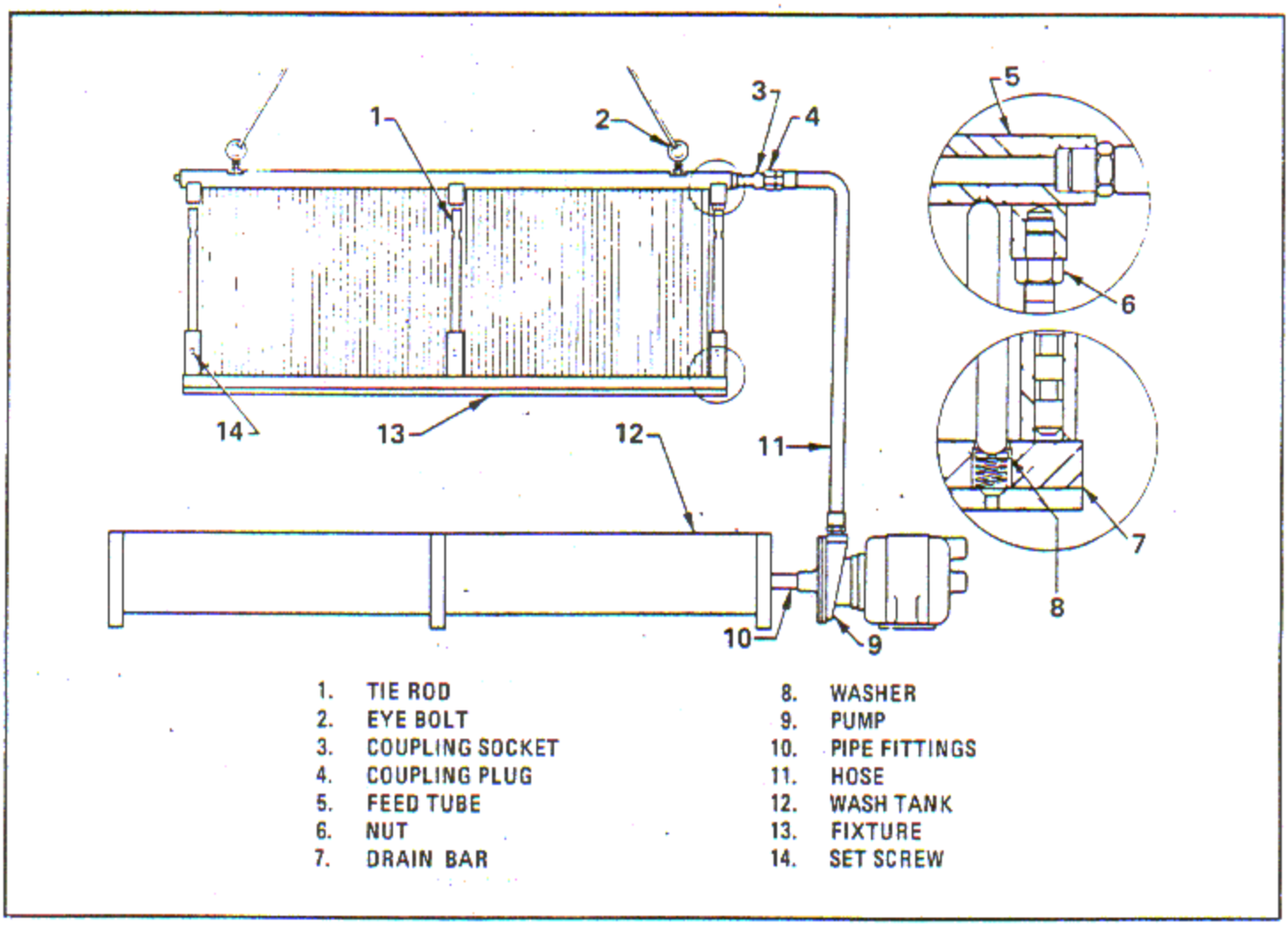

1. TIE ROD
2. EYE BOLT
3. COUPLING SOCKET
4. COUPLING PLUG
5. FEED TUBE
6. NUT
7. DRAIN BAR
8. WASHER
9. PUMP
10. PIPE FITTINGS
11. HOSE
12. WASH TANK
13. FIXTURE
14. SET SCREW

Figure 5-5. Push Rod Flushing Fixture

116116L), in the other end of the hose and attach it to the coupling socket (3, Hansen Manufacturing Co., 4031 West 150 St., Cleveland, Ohio, Cat. No. 6369 or equivalent), in flushing fixture (13).

c. Adjust the fixture to the correct height by loosening the tie rod set screws (14) and setting the screws in one of two grooves on the tie rod (1). Further adjustment, if necessary, may be made by loosening the nut (6) on the tie rod and placing a wrench on the flat of the tie rod and adjusting it to the required height.

d. Mount the fixture over the wash tank (12) using a suitable hoist as shown.

e. Visually inspect the push rods to see that they are not clogged with foreign objects. Remove any foreign objects and blow out the rod with compressed air.

f. Insert one end of the push rod in the fixture drain bar (7) and depress the washer (8, Hansen Manufacturing Co., 4031 West 150 St., Cleveland, Ohio, Cat. No. W6000 or equivalent), until the other end of the push rod can be inserted in the fixture feed tube (5). Insert all the push rods in the fixture in this manner.

g. Turn on the pump (9) and allow the solvent (Magnus Chemical Corp., Inc., Garwood, N.J., No. 775) to circulate for 30 minutes. Disconnect the hose (11) from the fixture (13) and insert an air hose. Blow out all excess solvent from the push rod oil passages.

h. Remove the push rods from the fixture and inspect from both ends to ensure that all foreign matter is removed.

5-62. CLEANING TABLE.

5-63. GENERAL. The engine parts to be cleaned are listed at the left of the table. The cleaning operation is listed at the top of the table followed by the applicable paragraph number. The cleaning operations that come under one general group title are shown under that title, for example: Heavy sludge removal, vapor degrease, petroleum solvent and alkaline cleaner are all degreasing procedures and are under the general group title degreasing. The general group title will be followed by a span of paragraph numbers which contain the procedures. When a procedure is broken down into two or more methods, these methods will be listed in separate columns under the procedure. The special procedures are listed in the remarks column on the right side of table 5-1.

5-64. APPLICATION.

a. Select the part to be cleaned by referring to the left hand column of table 5-1.

b. Use the cleaning procedures indicated by the numbers in strict numerical sequence, even though they may not appear that way, from left to right in table 5-1.

c. Note that the sequence numbers having a + sign next to them will appear more than once on the same line. This + sign indicates that the operator may use any of the methods so indicated.

d. A # sign next to the number indicates that the cleaning procedure will apply if the condition of the particular part warrants this type of cleaning.

e. A * sign next to the number will indicate that the part should be cleaned employing the general procedure in conjunction with the special procedure referred to in the remarks column on the right side of table 5-1.

5-65. SPECIALIZED CLEANING.

5-65A. GENERAL. Procedures for cleaning shaft journals, gear teeth, cam tracks and other steel parts will be found in the following steps a through f.

a. Buff shaft journals, gear teeth, cam tracks and other steel parts with a suitable diameter brass wire (0.005 inch) wheel.

b. Lightly buff cadmium plated steel parts with a suitable brass wire wheel, hand brush or bristle hand brush.

c. Lightly buff steel parting surfaces with a suitable brass wire wheel, hand brush or bristle hand brush.

d. Remove dirt or carbon from steel parts with a suitable brass wire wheel, hand brush, bristle hand brush or with non-ferrous metal scraper or pick.

e. Buff with a suitable diameter steel wire (0.005 inch) wheel or application of 400 grit emery cloth to remove hard rust. Clean the inside of shaft or inaccessible crevices by using 400 grit emery cloth on a suitable power driven quill.

f. Soft grit blast cylinders, piston, impeller, articulated rods, gear and shaft splines and similar engine parts to remove hard carbon residue.

CAUTION

Do not immerse discs in any carbon removing compound nor any degreasing fluid.

g. Clean impeller drive multiplate clutch discs by washing in kerosene, VV-K-211. Carbon may be removed with a non-metallic bristle brush.

NOTE

Ensure crevices and oil passages are not blocked with the blasting material.

5-66. CORROSION PREVENTIVE. (See tool group 42.)

5-66A. GENERAL. Use corrosion preventive compound, Specification MIL-C-5545, for this operation.

a. Ferrous parts shall be coated as soon as possible, but in less than two hours after cleaning.

b. Preservative hydraulic oil, Type II, MIL-H-6083, may be used as a temporary measure (up to 30 days in process time) to protect ferrous parts against corrosion.

TABLE 5-1 - CLEANING CHART

+ Operator may use any one of the methods so indicated.

Follow this procedure if the particular part warrants this type of cleaning.

* Part should be cleaned employing the general procedure in conjunction with the special procedure referred to in the remarks column on the right side of the table.

	Degreasing							Carbon Removal								
		Petroleum Solvent						Grit Blasting								
Engine Part	Heavy Sludge Removal 5-11	Trichlorethylene (Vapor) Method 5-14	Spray Booth 5-16	Spray Booth 5-16 or Wash Tank 5-17	Alkaline Method 5-18	Cold Soak 5-21 or Hot Soak 5-22	Rinse After Carbon Soak 5-23	Sand Blasting 5-27	Aluminum Oxide (Dry Blast) 5-28	Vapor Blast (Liquid Hone) 5-29	Tumblast 5-30	Soft Grit Blasting 5-31	Pressure Flusing 5-61	Corrosion Preventive 5-66		Remarks
Crankcase Front Section		1+		1+	1+	2	3								4	
Propeller Shaft		1+	4	1+	1+	2	3								5	
Crankcase Main Sections, Front and Rear		1+	4	1+	1+	2	3								5	
Crankshaft Front and Rear	1	2+	5	2+	2+	3	4								6	
Counterweights	1	2+	5	2+	2+	3	4								6	
Rod, Articulated or Master		1+	4	1+	1+	2	3	5#							6	
Bearing, Master Rod				1+											2	
Bearings, Crankshaft Front and Rear Main		1+		1+	1+	2	3								4*	4*, paragraph 5-35.
Cylinders		1+		1+	1+							2*			3	2*, paragraph 5-39.
Pistons		1+		1+	1+	2*	3	4								2*, paragraph 5-47.
Intake and Exhaust Valves		1+	3	1+	1+			2+*	2+*						4	2*, paragraph 5-46.
Valve Springs and Washers		1+	3	1+	1+			2+	2+		2+				4	2*, paragraph 5-45.
Valve Rocker Arms		1+	4	1+	1+	2	3								5	

TABLE 5-1 - CLEANING CHART (CONT.)

Push Rod Assemblies		1+		1+	1+	2	3						4*	5	4*, paragraph 5-60.
Cylinder Air Deflectors				1+											
Supercharger Front Housing		1+	4	1+	1+	2	3								
Intake Pipes		1+		1+	1+	2	3					4#*			4*, If necessary to remove paint.
Impeller		1+	4	1+	1+	2	3								
Sleeve, Impeller Shaft Oil Seal		1+	5	1+	1+	2	3					4#		6	
Shaft, Impeller		1+	4	1+	1+	2	3							5	
Diffuser Plate		1+	4	1+	1+	2	3								
Accessory Drive and Starter Shaft		1+	4	1+	1+	2	3							5	
Supercharger Rear Housing		1+		1+	1+	2	3								
Tachometer Drive Gear Housings, Fuel Pump Support and Oil Pump Housing		1+		1+	1+	2	3							4	
Impeller Drive		1+	4	1+	1+	2	3							5	
Disc, multiplate clutch			1*												1*, paragraph 5-65Ag.
Tachometer and Fuel Pump Drive		1+	4	1+	1+	2	3							5	
Supercharger Rear Cover		1+	4	1+	1+	2	3							5	
Front Oil Pump and Sump		1+		1+	1+	2	3								
Rear Oil Pump, Pressure and Scavenge Strainers		1+	4	1+	1+	2	3							5	
Exhaust Pipes									1+	1+	1+				
Tubing and Fittings (metal)		1+	4	1+	1+	2	3							5	
Fiber Insert Nuts		1+		1+											
Nuts, Bolts, Washers and Miscellaneous Small Steel Parts		1+	4	1+	1+	2	3							5	
Gears and Shafts		1+	4	1+	1+	2	3							5	

SECTION VI

INSPECTION AND REPAIR

6-1. GENERAL.

6-2. Inspection of engine parts must be thorough and intelligent. Efficient and dependable overhaul depends highly on careful inspection, and too much emphasis cannot be brought to bear on its importance.

6-3. As a rule, the main purpose of these instructions is to supplement the judgment of an experienced and qualified inspector. Less experienced personnel should, however, follow the instructions in this section carefully.

6-4. Inspection of the engine may be generally divided into four classifications.

a. Inspection of parts after disassembly.

b. Inspection after repair and replacement.

c. Inspection during assembly.

d. Inspection during testing after overhaul.

6-5. The inspection procedures in the first part of this section pertain to inspection after disassembly. Table 6-1 contains an index for inspection procedures and instructions for engine parts to which special limits or procedures apply. The repair and replacement procedures include all the inspection checks required after a part has been repaired. The remaining two classes of inspection are covered in other sections of this manual.

6-6. The Table of Limits in Section IX, lists fits and clearances which must be maintained when overhauling an engine. It is used as an indispensable guide for checking to determine whether parts should be continued in service or replaced. Measurements listed in the table under the heading Blueprint Minimum and Maximum establish the fits and clearances which must exist after new parts have been installed. Measurements listed under Service Limit govern the continued use of used engine parts to their specified limits.

6-7. All parts, before inspection and after repair or replacement, should be thoroughly cleaned as described in Section V. Tag or mark all parts to be reconditioned, after inspection. Coat all parts liberally with corrosion preventive compound, Military Specification MIL-C-6529, Type II, after inspection and after reconditioning.

NOTE

After machining operations, all sharp corners are to have a breakedge of 0.010 - 0.030 inch radius unless otherwise specified. When required, grade 320 or finer abrasive cloth may be used to remove light scoring, chafing or corrosion pitting from finished surfaces; however, it SHALL NOT be used routinely to polish bearing surfaces or to improve the appearance of a part.

6-8. OILS. Engine oils specified for use during overhaul, assembly and testing are listed in the following chart. Equivalent oils, where available, are shown under the applicable Specification number.

MIL-L-6082, Grade 1100

Tycol Aubodon No. 47	Tidewater Oil Co. 4201 Wilshire Blvd. Los Angeles, California
Standard No. 1260	Standard Oil Co. 500 Broad St. Elizabeth, New Jersey
Vitrea 27	Shell Oil Co. 50 W. 50th St. New York, New York
Sunvis No. 16	Walnut and 16th Sts. Philadelphia, Pa.

MIL-L-22851, Grade 1120

MIL-L-2104, Grade 10, 29°C ± 3° (85°F ± 5°)
SAE 10, 32°C (90°F)
MIL-L-15016A, Symbol 2110, 29°C ± 3° (85°F ± 5°)

TABLE 6-1. INSPECTION INDEX

COMPONENT	PROCEDURE
Marking of Engine Parts for Identification	Refer to paragraph 6-9
Visual Inspection	Refer to paragraph 6-20
Inspection of Engines Subjected to Overspeed	Refer to paragraph 6-23
Inspection of Hardened Steel Parts	Refer to paragraph 6-24
Magnetic Particle Inspection	Refer to paragraph 6-26
Crankshaft Rear End Inspection	Refer to paragraph 6-45
Penetrant Inspection	Refer to paragraph 6-48
Anti-Friction Bearing Inspection	Refer to paragraph 6-57
Crankcase Front Section	Refer to paragraph 6-65
Propeller Shaft Sleeve and Front and Rear Bushings	Refer to paragraph 6-68
Propeller Shaft Thrust Bearing Nut	Refer to paragraph 6-70
Stationary Reduction Gear	Refer to paragraph 6-71
Reduction Gear Pinion Carrier Trunnions and Trunnion Thrust Faces	Refer to paragraph 6-72
Valve Cam	Refer to paragraph 6-75
Crankcase Main Section Cylinder Decks	Refer to paragraph 6-76
Cylinder Hold-Down Cap Screw Hole Thread	Refer to paragraph 6-80
Crankshaft Crankpin	Refer to paragraph 6-82
Counterweight Bushings	Refer to paragraph 6-84
Counterweight Pins	Refer to paragraph 6-86
Piston Oil Check Valve Leakage	Refer to paragraph 6-87
Master Connecting Rod	Refer to paragraph 6-88
Articulated Rod	Refer to paragraph 6-97
Knuckle Pin Splined Locking Plate	Refer to paragraph 6-100
Cylinders with Loose or Broken Cap Screws	Refer to paragraph 6-102
Cylinder Barrel	Refer to paragraph 6-103
Cylinder Head	Refer to paragraph 6-108
Cylinder Fins	Refer to paragraph 6-112
Exhaust Pipe Connection	Refer to paragraph 6-114

TABLE 6-1. INSPECTION INDEX (Cont)

COMPONENT	PROCEDURE
Exhaust Connection Clamp Assembly	Refer to paragraph 6-115
Piston	Refer to paragraph 6-116
Rocker Box Cover	Refer to paragraph 6-122A
Rocker Arm	Refer to paragraph 6-123
Rocker Arm Hub Bolt Bushing	Refer to paragraph 6-128
Rocker Arm Bearings	Refer to paragraph 6-130
Valves	Refer to paragraph 6-131
Valve Springs	Refer to paragraph 6-137
Valve Guides	Refer to paragraph 6-138
Exhaust Valve Guide Boss Erosion Limits	Refer to paragraph 6-139
Valve Seats	Refer to paragraph 6-140
Valve Tappet Rollers	Refer to paragraph 6-141
Valve Tappet Sockets	Refer to paragraph 6-142
Push Rod Housing	Refer to paragraph 6-143
Deflectors	Refer to paragraph 6-144
Cylinder Air Deflector Clamps	Refer to paragraph 6-145
Supercharger Front Housing	Refer to paragraph 6-149
Inspection for Wear	Refer to paragraph 6-150
Impeller Drive Multi-Plate Clutch Adapter	Refer to paragraph 6-151
Impeller Drive Multi-Plate Clutch Plate	Refer to paragraph 6-152
Impeller and Inducer	Refer to paragraph 6-155
Supercharger Roller Clutch Assembly	Refer to paragraph 6-161
Supercharger Rear Housing	Refer to paragraph 6-166
Accessory Drive and Starter Shaft	Refer to paragraph 6-169
Accessory Drive and Starter Shaft Coupling	Refer to paragraph 6-172
Accessory Drive Gears	Refer to paragraph 6-173
Scavenge Pump Drive Shaft	Refer to paragraph 6-176

TABLE 6-1. INSPECTION INDEX (Cont)

COMPONENT	PROCEDURE
Starter Coupling	Refer to paragraph 6-178
Supercharger Rear Housing Cover	Refer to paragraph 6-180
Rear Oil Pump	Refer to paragraph 6-181
Oil Strainer	Refer to paragraph 6-186

6-9. MARKING ENGINE PARTS FOR IDENTIFICATION PURPOSES.

6-9A. GENERAL. There are various methods of marking engine parts for identification purposes. Some are temporary. Some are permanent, but restricted and are to be used only when authorized by bulletin, blueprint or other authoritative paperwork. Some methods are not acceptable for use on any engine part.

CAUTION

Under no circumstances will electro-etching or acid-etching (except rubber stamping with acid) be used on any engine part. Steel stamps will not be used on any highly stressed steel part. Investigation of some part failures have revealed that the failures were caused directly by identification marks placed on the part by electro-etching or steel stamping.

NOTE

No markings will be applied to any running surface unless specified by bulletin, blueprint or other authoritative paperwork.

6-10. UNRESTRICTED MARKINGS. Rubber stamping as described in the following paragraph is the only unrestricted method of marking engine parts. If the drawing does not specify a method and/or location of the marking, one of the following rubber stamp methods shall be used.

6-11. Rubber Stamping With Acid. This method an etch with acid producing no appreciable pittin depth and is used on metallic surfaces. Markings produced by rubber stamping are confined to the area by the size of the rubber stamp (Vinyl, Samuel H. Moss, 26 East 23rd Street, New York City, N.Y., or equivalent).

a. Clean the area to be etched and wipe dry wi a clean cloth.

b. On aluminum parts, polish the area to be etched if necessary, using fine abrasive emery clot Federal Specification P-C-451, or crocus cloth, Federal Specification P-C-458.

c. Dampen the raised characters of the stamp c an Aloxite pad (Carborundum Company, Niagara Falls, N.Y., or equivalent) moistened with the applicable etching acid. Use the recommended etching acid for each metal as set forth in steps d, e and f.

d. For silver, cadmium plate and plain carbon or alloy steels, except nitralloy or stainless, use Blue Zincograph No. 1 (William Longbien and Brothers, New York, N.Y.) etching acid or equivalent.

e. For nitralloy, bronze, stainless steel and aluminum, use Green Zincograph No. 2 (William Longbien and Brothers, New York, N.Y.) etching acid or equivalent.

f. For surfaces that are specified to be lubrized use marking acid (Westinghouse No. 40-22-2C, Westinghouse Electric Co., Bloomfield, N.J., or equivalent). This marking acid may also be used as an alternate for Green Zincograph No. 2.

g. Stamp the part by applying an even downward pressure. Neutralize with a solution of three parts by volume of water and one part by volume of soluble oil (Swan Michigan Oil Company, Bayonne, N.J., or equivalent). Apply liberally with a brush. Discard the neutralizer at the end of every 8 hours.

h. Use slushing oil (Pakoil No. 5, Pennsylvania Refining Co., Butler, Pa., or equivalent) on bare steel surfaces that require slushing.

6-12. Rubber Stamping With Ink or Dye. Characters are produced with a rubber stamp using an ink or dye that will not injure the surface. When ink stamping is specified on a painted, chemically treated, or resin-coated surface, such stamping shall be applied after the surface treatment. When ink stamping is specified on non-metallic parts, such stamping shall be done with ink or dye.

a. Apply ink (Marko S-1141, White or Black, Marking Device Company, 14 South Bank St., Philadelphia, Pa., or equivalent) to a suitable stamp pad.

b. Dampen the raised characters of the stamp and stamp the part.

NOTE

Ordinary ink is unsatisfactory and must not be used.

6-13. RESTRICTED MARKINGS. The following methods of marking engine parts produce a permanent identification; however, their use is restricted. They are to be used only when authorized by bulletin, blueprint or other authoritative paperwork. When used, these types of markings will be applied prior to plating, painting or chemical surface treatment. They shall not be nearer than 0.031 inch to any corner, fillet or sharp edge, unless otherwise shown on the drawing.

a. Electrochemical etching.

b. Engraving with engraving machine.

c. Vibro engraving.

d. Steel stamp peening.

e. Scribing by hand.

6-14. Electrochemical Etching. Characters produced by electrochemical etch (electrolysis) are confined to the area by a stencil.

a. Fill the tray of a marking fixture (Lectroetch Co., Elderwood Avenue, East Cleveland 12, Ohio, or equivalent) with the proper electrolyte fluid for the material to be etched.

b. Adjust the fixture power pack unit for alternating or direct current, whichever is desired. Leave the polarity switch in the normal position. If the etch mark is not satisfactory, reverse the polarity switch. Current may be controlled by adjusting the rheostat on the unit.

c. Place the stencil on the marking fixture, and place the area to be marked over the characters in the stencil.

d. Etch the parts by grounding, either against the flexible steel strip extending from the rear contacts over the stencil, from the horizontal steel strip or from hand ground.

e. Brush the parts across the cleaner pad soaked in Lectroetch cleaner or equivalent.

6-15. Engraving (When Using Engraving Machine). Characters are produced by a rotating cutter or grinder and the markings are restricted to the area of the part by a template.

a. Secure the part to the holding fixture on the table of the engraver (Gorton Engraver, George Gorton Machine Co., Racine, Wisconsin, or equivalent).

b. Set the template on the engraving machine and adjust the ratio arms to the size of the engraving specified.

c. Adjust the table for the depth of impression specified.

d. Apply engraving to obtain a depth of impression of 0.001 - 0.003 inch for ENGRAVE, and 0.002 - 0.006 inch for DEEP ENGRAVE.

e. If engraving is performed on a ground surface or equivalent surface finish, polish the area after engraving to remove burrs and sharp edges.

6-16. Vibro Engraving. Characters are produced by the action of a rapidly vibrating tool and are restricted to the area by the operator.

a. Plug a vibrating tool (Vibro-Etcher, Burgess Vibrocrafters, 180 North Wabash Ave., Chicago 1, Illinois, or equivalent) into a convenient 60 cycle, 110 - 120 volt AC outlet.

b. Select the point most suited to the material to be marked and adjust the depth of impression required by loosening or tightening the stroke adjuster.

c. When marking either steel or plastic material, hold the vibrating tool in the same manner as a pencil.

d. Set the depth of impression for 0.0006 - 0.003 inch.

CAUTION

Do not use stamps having sharp edges or corners. Do not distort the part by stamping.

6-17. Steel Stamp Peening. Characters are produced by forcible displacement of material. Stamp indicates a marking which is impression cut, pressed, stamped, rolled or peened. The method must commonly employed is stamping by hand, and the markings are restricted to the area by the operator.

a. Manually stamp the part as required to obtain a depth of impression of 0.001 - 0.003 inch for STAMP or 0.002 - 0.006 inch for HEAVY STAMP.

6-18. Scribing (Hand). Characters are produced by a cutting or scratching action.

a. Manually cut or scratch the desired characters into the part by means of a carbide scribing tool (Wendt-Sonis Co., Hannibal, Missouri, or equivalent).

b. The depth of impression shall be 0.001 - 0.003 inch for SCRIBE or 0.002 - 0.006 inch for HEAVY SCRIBE.

6-19. TYPES OF INSPECTION.

6-20. VISUAL INSPECTION. Terms designating the various conditions found on engine parts are defined in Table 6-2.

6-21. Subject each part to a close visual inspection. Adequate lighting and a magnifying glass are essential, and should be available. Use the sense of touch as an aid. Scratches, scores, scuffs, galling and feathering, and other conditions inconspicuous to the eye can often be detected when a fingernail is lightly drawn over the suspected area.

6-22. The information and definitions listed in Table 6-2 are intended only as a guide for the inspector and will not necessarily cover every case.

6-23. INSPECTION OF ENGINE SUBJECTED TO OVERSPEED. Engines that have been subjected to overspeed shall be 100 per cent inspected and completely overhauled. In addition to the routine overhaul inspection particular emphasis shall be placed on the items in Table 6-3.

6-24. HARDENED STEEL PARTS INSPECTION. After grinding, all hardened steel parts must be etch inspected for burns, and magnetic particle inspected for cracks. Parts that are burned or cracked are unfit for service. Refer to paragraph 6-25 for etch inspection and to paragraph 6-26 for magnetic particle inspection.

TABLE 6-2. GENERAL INSPECTION TERMINOLOGY

Definition of Condition	Possible Causes	Area Possibly Affected
ABRADED SURFACE. Servere marking of a surface similar to scratches but covering an area rather than a line.	Assembly of close fitting parts, improperly cleaned.	Any part.
BRINELLING (TRUE). Dents or hollows produced by actual plastic flow. Grinding marks are not noticeably disturbed and can be distinguished throughout the entire depressed area.	Extremely high shock loads.	Bearings.
BRINELLING (FALSE). Similar to fretting. Removal of metal by attrition.	High unit pressure on small localized points, with slight angular or axial oscillation and lubricant loss, tears submicroscopic particles from the high points. The particles oxidize and act as lapping compound to remove additional metal.	Bearings.
BURNED SURFACE. Discoloration from excessive heat or friction.	Improper clearance. Insufficient lubrication. Excessive loads.	Bearings, journals, pistons, valves.
CHAFED SURFACE. Metal transferred from one surface to another resulting from slight movement between two surfaces under high contact pressure. The surface of each part reveals metal removed and metal added.	Relative movement between surfaces supposedly stationary with respect to each other.	Parts bolted together, tight fit deflectors, starter shafts.
CHIPPED SURFACE. Surface metal removed as though from a blow. Metal breaking away.	Careless handling, improper load distribution.	Edges of hardened steel parts.
COLLAPSED SURFACE. Dimensional change with no removal of metal or abrupt change of surface.	Excessive pressures, improper or abusive engine operation.	Valves, springs, oil sump strainers, oil transfer tubes.
CORRODED SURFACE. Surface breakdown by chemical action.	Undue exposure to corrosive agents. Improper cleaning during overhaul.	Any part.
CRACK. A partial fracture.	Excessive stress due to vibration, shock or overloading.	Any part.

TABLE 6-2. GENERAL INSPECTION TERMINOLOGY (Cont'd)

Definition of Condition	Possible Causes	Area Possibly Affected
DENTED SURFACE. Smooth depression of surface metal without removal of metal.	Foreign particles trapped between loaded parts. Striking of part with dull object due to careless handling.	Any part.
ERODED SURFACE. Removal of surface metal by mechanical means.	Flow of corroding liquids, hot gases or grit-laden oil.	Combustion chamber components, bearings.
FATIGUE FAILURE. Progressive yielding of one or more local areas of weakness. A developed crack which spreads from repeated stress until there is little sound metal left. The normal stress on the piece is greater than the strength of the remaining material and it snaps. Failure is not due to crystallization as is commonly believed.	Tool marks, sharp corners, cracks, corrosion.	Improper torquing of studs or bolts to obtain proper stretch.
FEATHERED SURFACE. Piling up of a metal on a part resulting in very irregular and sharp edges.	Insufficient lubrication, low clearances.	Piston rings, oil seal rings, valve faces, gear teeth.
FLAKED SURFACE. Breaking away of plated surface or parent metal.	Faulty adhesion of the plating, heavy loading.	Bearings, clutch discs.
FRACTURE. Separation by force into two or more pieces.	Fatigue, shock or overloading.	Any part.
GALLED SURFACE. A transfer of metal from one surface to another. Serious chafing or pitting. An advanced stage of metal wear.	Heavy bearing in small areas with insufficient lubrication. Relative movement between surfaces supposedly stationary in relation to each other.	Splines, cylinder pads, gear teeth, counterweight pins, bearings.
GLAZED SURFACE. Hard glossy surface developing on plain bearing surface. Often beneficial condition.	Combination of pressure, oil and heat.	Bearing surfaces.
GOUGED SURFACE. Displacement of material from a surface; a cutting, tearing, displacement effect.	Pressure of a large foreign body between moving parts.	Any part.

TABLE 6-2. GENERAL INSPECTION TERMINOLOGY (Cont'd)

Definition of Condition	Possible Causes	Area Possibly Affected
GROOVED SURFACE. Shallow channels, wider than scratches and usually smooth.	Misalignment of parts. Foreign material on contact surfaces. Abnormal relative motion of contact surfaces.	Cylinder sleeves, accessory drive and starter shaft, oil seal sleeves, crankpins.
GUTTERED SURFACE. Severe erosion confined to narrow areas in the direction of flow.	Improper mating of parts allowing escape of combustion gases through a narrow area. Operation of cracked parts in combution chamber.	Valve seats and guides, cylinder heads, piston and spark plug inserts.
INCLUSIONS (NON-METALLIC). Fine jagged interruptions of the surface metal (called stringers when in a straight line in the direction of forging).	Foreign material introduced into the steel during the melting and solidification process.	Any part.
METALIZATION. Coating of metal, sprayed molten on another part or parts.	Abuse of engine during operation causing high temperature.	Aluminum or lead parts.
NICKED SURFACE. Mark left on the part by an impact from a sharp instrument, usually found on corners.	Carelessness in handling.	Any part.
PEENED SURFACE. Surface marked as from a heavy blow with a blunt instrument. Surface material usually mashed.	Careless handling. Excessive or concentrated loads sufficient to deform the metal. Impact of a foreign object. Blows of hammer on part.	Any part.
PICKED-UP SURFACE. Rolling up of metal, or transfer of metal from one surface to another.	Rubbing of two surfaces with insufficient lubrication. Excessive heat.	Bushings, threads, pressure and scavenge gears, spark plug inserts.
PITTED SURFACE. Small open hollows, cavities or voids.	Small irregular particles of metal broken out due to corrosion or inclusions.	Cylinder bores, gear teeth, valve tappet guides, piston pin bushings, cam tracks, bearings.
RUSTED SURFACE. Reddish, porous, brittle corrosion on ferrous metal parts.	Moisture.	Any steel parts.

TABLE 6-2. GENERAL INSPECTION TERMINOLOGY (Cont'd)

Definition of Condition	Possible Causes	Area Possibly Affected
SCORED SURFACE. Deep scratches made by sharp edges of foreign particles usually found to follow the path of travel of the parts.	Particles left from machining or broken off from sharp edges, imbedded between surfaces moving at different speed. Improper cleaning during overhaul. Insufficient lubrication. Insufficient clearance.	Gear teeth, journals, cylinder barrels, bearings, pistons, crankpins, starter shaft, and any part with a relative sliding motion.
SCRATCHED SURFACE. Narrow shallow markings.	Carelessness in handling.	Any part.
SCUFFED SURFACE. Dulling or moderate wear of a surface.	Slight rubbing due to insufficient lubrication.	Parts bolted together, supercharger rear housing and covers, steel bearings, cam drive gear teeth, counterweights.
SPALLED SURFACE. Separation of the surface metal in thin layers when the layers are of the same metal as the basis metal.	Improper clearance at installation. Excessive heat and pressure. Improper load distribution.	Gear teeth, tappet rollers, pinion, cam lobes, valve stems, ball and roller bearings.
WELDED SURFACE. Melted metal evident on the surface.	Abnormal operation causing high surface temperature and pressure sufficient to melt a surface metal.	Rollers, pinions, accessory drive gear teeth.

TABLE 6-3. SPECIAL INSPECTION OF ENGINES SUBJECTED TO OVERSPEED

Reciprocating Part	Inspection	Remarks
Piston	Visually inspect domes for valve-piston interference.	Reject piston and valve if interference is indicated.
Articulated and Master Rods	Check for feathered edges or rolled over material on bushings. Check for elongation.	If this condition is indicated, reject the bushing and check the bore for elongation. Measure the diameter of the bore parallel and perpendicular to the rod axis and record both readings. The difference between the two readings must be within 0.001 inch.

TABLE 6-3. SPECIAL INSPECTION OF ENGINES SUBJECTED TO OVERSPEED (Cont'd)

Reciprocating Part	Inspection	Remarks
Articulated and Master Rods (Cont)	Check for articulated rod interference with the master rod hub OD in the web, and check for rod contact with cylinder skirts.	Reject the master rod, master rod bearing and associated articulated rod if interference is indicated.
Valves	Use 10X magnification and inspect the stem and throat area for cracks.	No cracks are permitted.
	Check valves for bending.	Reject valves that are bent.
Cylinder	Magnetically inspect the ID and flange area between the bottom fin groove and flange OD. Check for articulated and master rod contact with cyclinder skirts.	Refer to paragraph 6-26.
Piston Pins	Perform bend and dimensional check.	Place the ends of the straight section of the piston pin in suitable V blocks. Locate a dial indicator midway between the ends. The pin must run true within 0.002 inch full indicator reading when rotated.
Crankshaft	Prior to disassembly, with clamping bolt in place and torque not disturbed, check the run-out.	Maximum run-out at the front end is 0.006 inch full indicator reading.
Impeller and Supercharger Drive	Inspect bushings. Check inducer for cracks at root of vanes on propeller side (flat face).	No cracks are permitted.

6-25. Nital Etch Inspection Of Hardened Steel Parts For Grinding Damage (Burns).

NOTE

Once the procedure has been started, there should be as little delay as possible between steps. Timing is important; use a timer for both etch cycles. Make up new etching solutions at the start of each shift.

a. Degrease the part thoroughly. Allow the part to hang in the vapor until condensation stops. Spray part thoroughly with degreaser solvent while slowly raising the part out of the degreaser. Refer to paragraph 5-14.

b. Cool the part to approximate room temperature immediately after degreasing by immersing it in clean cold water. Blow dry.

c. Suitably mask all surfaces except those to be inspected.

d. First etch: Add 10 volumes of concentrated nitric acid to 90 volumes of water. Stir thoroughly and immerse the part for 30 seconds while agitating the solution.

e. Rinse the part in clean hot water, and blow dry.

WARNING

Acetone is toxic and flammable. Keep the container tightly covered when not in use.

f. Second etch: Add four volumes of concentrated muriatic (hydrochloric) acid, Federal Specification O-A-86, to 96 volumes of acetone, Federal Specification O-A-51 and mix thoroughly. Immerse the part for 90 seconds while agitating the solution.

NOTE

An alternate material for acetone is ethyl alcohol, Grade II, Class B, Specification O-E-760 b.

g. Rinse the part thoroughly in clean hot water, and blow dry.

WARNING

Alcohol is flammable. Keep the container tightly covered when not in use.

h. Neutralize the part by immersing it in a solution of five volumes of triethanolamine added to 95 volumes of denatured alcohol.

NOTE

Triethanolamine solution must be tested for alkalinity twice each shift. It must be alkaline, and should turn bluish-purple when tested with bromocresol purple indicator. If it turns orange-yellow it is acidic and must be discarded.

i. Rinse the part thoroughly in clean hot water, and blow dry.

j. Inspect for burns which will show up as darkened areas. In severe cases, the center of the darkened area will take on a lighter color.

k. Remove the masking.

l. Slush the part immediately in corrosion preventive compound, Military Specification MIL-C-6529, Type II.

6-26. MAGNETIC PARTICLE INSPECTION. Magnetic particle inspection is a non-destructive test to detect the presence of fatigue cracks, small grinding or quenching cracks, seams, non-metallic inclusions, and other defects on and immediately below the surface of magnetizable materials such as steel engine parts.

6-27. The theory behind magnetic particle inspection is that when a magnetic substance, usually finely divided particles of iron oxide, is applied to a part which has been suitably magnetized, it will concentrate on the surface of the part over any break or interruption in the lines of magnetic force and thus reveal indications of possible defects.

6-28. The complete inspection procedure consists of:

a. Preparation of part for inspection.

b. Magnetizing the part.

NOTE

When using magnetic particle inspection equipment with a tap-type switch instead of a rheostat, apply a tolerance of plus or minus 500 amperes to the specified amperages. Apply the higher amperage initially, but should a questionable discontinuity appear, select the lower amperage.

c. Applying a magnetic substance to the magnetized part.

d. Inspecting the part.

e. Demagnetizing the part.

f. Cleaning part after demagnetizing.

6-29. Preparation Of Parts For Inspection. Prior to magnetic particle inspection, parts must be prepared in accordance with Military Specification MIL-I-6868. This includes cleaning the plugging of holes leading to internal passages and cavities, and protective masking.

6-30. Magnetizing Parts. Both AC and DC output machines are available for magnetizing parts. Only DC output machines are recommended. They have a greater sensitivity and are able to produce indications of subsurface defects which are near the surface. There are several directions in which the magnetic lines of force can be made to flow through a part. The direction or directions selected must be able to provide an optimum magnetic field orientation most likely to detect service incurred discrepancies.

6-31. Applying Magnetic Substance. The magnetic substance is usually applied to the parts by a wet process, in which fine particles of the substance are in suspension in a liquid. While the equipment is in use, constant agitation of the mixture is necessary to keep the particles in suspension. The solution is applied to the magnetized part by flowing from a hose, pouring, or immersion, either while the magnetizing current is flowing (continuous method) or after the part has been magnetized and the current turned off (residual method).

6-32. Part Inspection. Parts must be given a critical visual inspection for evidence of concentration of the magnetic substance. Fluorescent and non-fluorescent suspension are used. Parts treated with a fluorescent suspension must be inspected under ultra violet light (black light). When treated with a non-fluorescent suspension, parts are inspected in daylight. A non-fluorescent suspension has been found to be the most sensitive when used in conjunction with a DC output machine on parts subject to fatigue failure nucleating from subsurface nuclei such as the races of anti-friction bearings.

6-33. Demagnetization After Magnetic Particle Inspection.

CAUTION

If parts are not properly demagnetized, they can collect and hold ferrous dust and chips which can cause engine malfunctions.

a. Pass the part slowly through a demagnetization coil until the part is at least 2 feet away from the coil. The part may be withdrawn from the same side of the coil through which it entered.

b. Turn off the current only after the part is at least 2 feet from the coil.

NOTE

If the part is within the coil or less than 2 feet away from the coil when the current is turned off, THE PART WILL REMAIN MAGNETIZED.

6-34. Magnetic Field Indicator Check For Residual Magnetism After Demagnetizing. Generally parts shall be considered demagnetized when the readings on a magnetic field indicator (Magnaflux Field Indicator, Magnaflux Corp., Chicago, Illinois, or equivalent) are within 1/4 of the indicator scale on either side of the zero, as explained in the following steps.

NOTE

Care and maintenance of a magnetic field indicator should be accomplished in accordance with the manufacturer's instructions.

a. When the indicator scale runs from minus 20 units to plus 20 units, the acceptable readings would be from minus 5 units to plus 5 units.

b. When the indicator scale runs from minus 10 units to plus 10 units, the acceptable readings would be from minus 2-1/2 units to plus 2-1/2 units.

6-35. Cleaning Parts After Demagnetization. The magnetic substance shall be completely removed from all parts in accordance with Military Specification MIL-I-6868. All plugs shall be removed from holes and cavities after inspection and demagnetization.

6-36. Control Of Suspension. Check each magnetic particle suspension (solution) once daily. Proceed as follows:

a. Thoroughly stir the suspension prior to taking a sample.

b. Pour or dip 100 ml sample of suspension into a suitable 100 ml pear shaped tube.

NOTE

If any foreign material appears in the sample, take a new sample.

c. Permit the suspension in the tube to stand for 30 minutes.

d. Read the volume of solid which has settled at the end of 30 minutes. If the volume falls within the following limits, the suspension is acceptable.

Type of Suspension	Volume Limits
Black Magnaflux Powder #7C	1.7 - 2.4 ml
Red Magnaflux Powder #9C	1.7 - 2.4 ml
Magnaglo Powder #14	0.1 - 0.4 ml

6-37. PARTS THAT MAY BE MAGNETIC PARTICLE INSPECTED. Parts that may be magnetic particle inspected using DC output machines are listed in Table 6-4. The method of applying the suspension to a part may be either the wet residual method, or the wet continuous method.

TABLE 6-4. PARTS TO BE MAGNETIC PARTICLE INSPECTED

Part Name	Direction	Amperage
MISCELLANEOUS		
Bolts, screws, studs and nuts. All unless otherwise specified.	C	As required
CRANKCASE FRONT SECTION		
Flange, Crankcase front section	B	1500
Retainer, Propeller shaft thrust bearing	B	1500
Gear, Governor driving	B	1000
Gear, Governor intermediate drive	B	1000
Shaft, Governor drive gear (R1820-76 Series, -86A, -86B)	E	500
PROPELLER SHAFT		
Nut, Propeller shaft thrust bearing	B	1200
Spacer, Propeller shaft thrust bearing	B	1000
Sleeve, Propeller shaft	B	1000
Shaft, Propeller	E	2500
Inner and Outer Races, Propeller shaft bearing	B	2500
Pinion, Reduction driving gear (R1820-76 Series, -86A, -86B)	E-T	800-500
Pinion, Reduction gear (R1820-80 Series)	B-T	800-500
Gear, Stationary reduction	B-T	2500-1500
Carrier, Reduction drive pinion (R1820-80 Series)	B-T	2000-1500
Bolt, Reduction gear pinion (R1820-80 Series)	E	400
Sleeve, Stationary reduction gear support (R1820-80 Series)	B	1000
REDUCTION DRIVING GEAR AND CAM MECHANISM		
Nut, Reduction driving gear	B	800
Gear, Reduction driving	B-T	2500-1500
Gear, Intermediate cam drive	E-T	1000-750
Spacer, Crankshaft oil seal ring	B	1000
Pinion, Intermediate cam drive gear	B-T	1000-500
Support, Cam and oil sump scavenge pump drive	B-T	2000-1500
Cam, Intake and exhaust	B-T	2500-1500
Pinion, Cam to oil sump scavenge pump drive coupling gear	B-T	1000-500

TABLE 6-4. PARTS TO BE MAGNETIC PARTICLE INSPECTED (Cont'd)

Part Name	Direction	Amperage
REDUCTION DRIVING GEAR AND CAM MECHANISM (CONT)		
Gear, Oil sump scavenge pump driven coupling	B-E	1000-1000
Gear, Oil sump scavenge pump drive shaft	B	800
Ring, Cam and oil sump scavenge pump drive support (R1820-76 Series, -86A, -86B)	B	1000
Gear, Balanceweight drive (R1820-80 Series)	B-T	1500-1000
Balanceweight (R1820-80 Series)	B	2000
Bolt, Balanceweight and gear retaining (R1820-80 Series)	E	400
Bolt, Balanceweight drive gear retaining (R1820-80 Series)	E	300
Bearing, Cam (R1820-80 Series)	B	2000
CRANKCASE MAIN SECTION		
Crankcase Main Section, Front	B-T	3000-2000
Crankcase Main Section, Rear	B-T	3000-2000
Ring, Crankshaft main front bearing retaining	B-C	2000-6750
Liner, Crankshaft main rear bearing	B	1500
CRANKSHAFT AND ARTICULATED RODS		
Crankshaft, Front and rear end	E-C	2500-8000
Counterweights, Front and rear, front half and rear half	B-E	1500-1500
Bushings, Counterweight front and rear	B	1000
Pin, Crankshaft front and rear counterweight	E	1000
Bolt, Front and rear counterweight	E	500
Nut, Front and rear counterweight bolt	B	600
Bushings, Front and rear counterweight crankshaft	B	1000
Inner and Outer Races, Crankshaft front and rear main bearings	B	2500
Rollers, Crankshaft front and rear main bearings	E	1000*
	E	1350*
Plug, Crankshaft breather substituting	E	1000
Plate, Knuckle pin locking	B-T	1500-500
Rod, Master connecting, (end to end)	E	2500
(bar through crankpin hole)	B	2500
(bar through piston pin bore)	B	2500
(coil)	C	10000
Rod, Articulated (end to end)	E	1500
(bar through piston pin bore)	B	2000
(bar through knuckle pin bore)	B	2000
Pin, Knuckle	E	1000
Screw, Crankcheek	E	1000
Washer, Crankcheek screw	B	400
Coupling, Accessory drive and starter shaft (splined)	B	1000
Nut, Crankshaft rear main bearing	B	1000
CYLINDERS, PISTONS AND VALVE MECHANISM		
Screw, Cylinder hold-down	C	500
Cylinder Assembly	B-C	1500-7000

* per inch of diameter

TABLE 6-4. PARTS TO BE MAGNETIC PARTICLE INSPECTED (Cont'd)

Part Name	Direction	Amperage
CYLINDERS, PISTONS AND VALVE MECHANISM (CONT)		
Barrel, Cylinder	B-C	1500-7000
Pin, Piston	B	1000
Bolt, Rocker arm hub	C	5000
Washer, Intake and exhaust valve spring upper	B	1200
Rod Assembly, Push	E	300
Guide, Valve tappet	B	1000
Tappet, Valve	E	800
Roller, Valve tappet	B	2500
SUPERCHARGER FRONT HOUSING		
Support, Impeller shaft bearing	B	1500
Flange, Intake pipe	B	1000
IMPELLER AND IMPELLER SHAFT		
Nut, Impeller shaft front	B	800
Sleeve, Impeller shaft oil seal front and rear	B	1000
Spacer, Impeller front and rear	B	750
Shaft and Bushing Assembly, Impeller	B-T	1000-500
Retainer, Impeller shaft	B	1000
SUPERCHARGER REAR HOUSING		
Sleeve, Supercharger rear housing impeller shaft	B	700
ACCESSORY DRIVE AND STARTER SHAFT		
Ring, Accessory drive and starter shaft oil seal packing retaining	B	1500
Coupling, Starter	E-T	1000-750
Shaft, Accessory drive and starter	E-C	1500-4500
Gear, Accessory drive	B-T	2500-1000
IMPELLER DRIVE (R1820-80 Series)		
Gear and Pinion, Impeller drive	E-T	1500-750
IMPELLER DRIVE (R1820-76 Series, -86, -86A, -86B)		
Gear and Bushing Assembly, Impeller drive shaft	E-T	1500-750
Cage Machining Assembly, Impeller drive shaft pinion	B-T	1500-750
Pinion, Impeller drive	E-T	1000-500
Gear and Bushing Assembly, Impeller roller clutch drive	E-T	1000-500
Gear, Roller clutch retaining and generator drive	B-T	1500-1000
Cam, Impeller low speed drive clutch	B	1200
Plate, Impeller drive multi-plate clutch	B	1000
Adapter, Impeller drive multi-plate clutch	B-T	1000-500
Piston and Lock Assembly, Impeller drive multi-plate clutch	B	1000
Sleeve, Impeller drive multi-plate clutch	B	750
Shaft, Impeller drive	B-T	1000-500
MAGNETO AND GENERATOR DRIVE		
Gear, Magneto drive	B-T	1000-500
Shaft, Magneto drive	E	1000
Gear, Generator intermediate drive (R1820-80 Series)	B-T	1000-750
Gear, Generator drive	B-T	1000-750

TABLE 6-4. PARTS TO BE MAGNETIC PARTICLE INSPECTED (Cont'd)

Part Name	Direction	Amperage
OIL PUMP, FUEL PUMP AND DRIVE FOR DUAL ACCESSORY DRIVE		
Gear and Retainer Assembly, Oil pump drive	E-T	1000-500
Retainer, Oil pump drive gear spring	E	1000
Gear, Fuel pump and dual accessory drive	B-T	800-500
Plug, Fuel pump and dual accessory drive shaft	C	3150
Shaft Assembly, Fuel pump and dual accessory drive gear	E-T	1000-1000
Shaft Assembly, Fuel pump drive	E	1000
DUAL ACCESSORY DRIVE		
Shaft, Dual accessory drive intermediate	E-T	1000-500
Gear, Dual accessory drive intermediate	B-T	1000-500
Gear, Dual accessory drive idler	E-T	1000-500
Gear, Dual accessory drive upper and lower accessory drive	E-T	1000-500
FRONT OIL PUMP AND SUMP		
Shaft, Oil sump scavenge pump drive	E	800
REAR OIL PUMP		
Coupling, Oil pump drive	B-T	1000-500
Gear, Tachometer drive shaft	E	800
Gear, Tachometer drive shaft intermediate	E	800
Gear, Electric tachometer drive shaft single row	E	800
Gear, Electric tachometer drive shaft double row	B	800
Valve, Oil pump check	E	1000
Retainer, Oil pump check valve	C	5400
Retainer, Tachometer drive shaft gear oil seal ring	B	700
Sleeve, Tachometer drive shaft gear	B	500

6-38. The recommended current for magnetizing is given under the heading AMPERAGE and the direction of magnetizing is indicated under the heading by the following code letters:

B Magnetize by using central conductor or bar. See figure 6-1.

E Magnetize by end to end contact. See figure 6-1.

T Magnetize by contact across the largest diameter. See figure 6-1.

C Magnetize by using a coil. See figure 6-1.

NOTE

When direction C is specified, the amperage listed is ampere turns (ampere turns = amperage x number of turns).

6-39. When the table specifies that a part be magnetized in two ways, e.g. B-T at 2500 - 1500 amperes, it should be interpreted as follows. Using a central bar at a maximum of 2500 amperes; using contact across the largest diameter at a maximum of 1500 amperes.

NOTE

Whenever a central conductor is used, the central conductor should be insulated from the part being inspected. A central conductor must not be used in a blind hole, as arcing damage to the part may result.

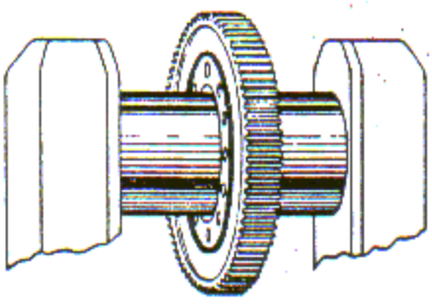

MAGNETIZING A GEAR BY CENTRAL CONDUCTOR

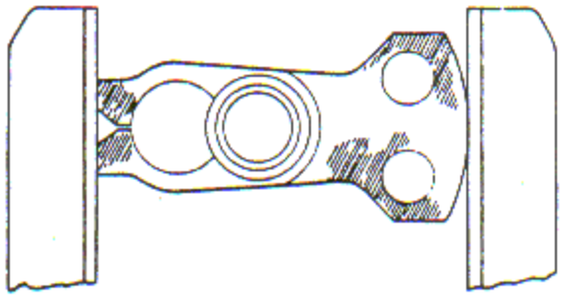

MAGNETIZING A CRANKSHAFT REAR BLADE BY END TO END CONTACT

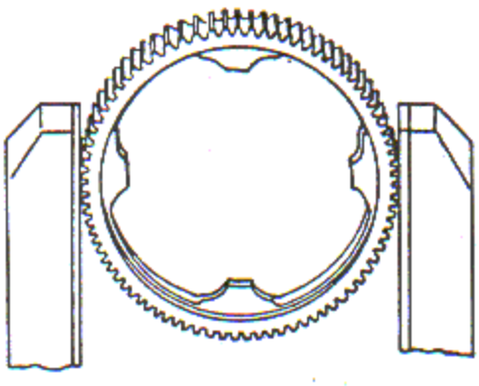

MAGNETIZING A GEAR BY CONTACT ACROSS THE TEETH

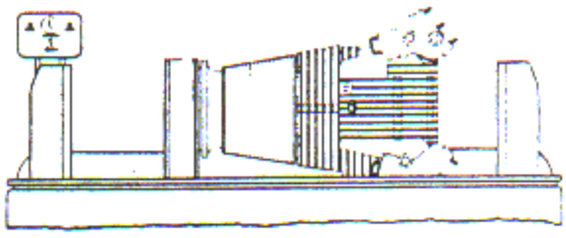

MAGNETIZING A CYLINDER BARREL USING A COIL

Figure 6-1. Directions of Magnetizing

6-40. SPECIAL CASES OF MAGNETIC PARTICLE INSPECTION.

6-41. PISTON PINS. Magnetic particle inspect piston pins by the wet residual method or wet continuous method using 1000 amperes and a central conductor. After inspecting the outer surface of the pin, redip the pin and, using a dental mirror, inspect the inner surface. Distinguish carefully between cracks and hairline magnetic indications of non-metallic inclusions.

6-42. Reject pins having cracks of any kind. Also, reject pins having any indications of inclusions on the inside diameter or chamfer of the pin or inclusions extending to the surface within 0.0625 inch of the edge of the pin. Piston pins with inclusions extending to the OD surface may be continued in service provided that individual indications do not exceed 0.25 inch in length and the sum of all inclusions does not exceed 0.75 inch. In cases where indications of inclusions are grouped, they must be separated by circumferential distance of at least 0.125 inch. Piston pins exhibiting hairline indications of sub-surface inclusions in OD surface may be continued in service providing individual indications do not exceed 0.500 inch in length and the sum of all indications does not exceed 1.5 inches. In cases where sub-surface indications are grouped, they must be separated by a circumferential distance of at least 0.125 inch. Inclusions extending to the surface will be visible after the powder has been wiped off; sub-surface inclusions are not visible after the powder has been wiped off. Stoning of piston pin to remove inclusions is not recommended.

6-43. CYLINDERS. The following method of inspecting cylinder barrels is considered the most satisfactory (Utilizing Model LAQ-3, Magnaflux Corp., Chicago, Illinois, or equivalent).

a. Immerse the cylinder barrel, with skirt end down, in the cylindrical tank containing the customary solution for magnetically inspecting cylinder barrels.

NOTE

A cylinder so installed will have the inside of cylinder head making contact with the central conductor.

b. Magnetize the central conductor by bringing the upper contact support assembly into contact with the top of the cylinder head using 1500 amperes.

c. Remove the cylinder from the tank and inspect for defects.

d. Immerse the cylinder barrel, with skirt end down, again in the cylindrical tank.

e. Using the foot switch, magnetize the coil with 7000 ampere turns.

f. Remove the cylinder from the tank and inspect for defects.

g. Demagnetize the cylinder.

NOTE

With slight modifications, conventional magnetic particle inspection equipment can be used to accomplish a procedure similar to the one outlined above.

6-44. ANTI-FRICTION BEARINGS. All critical bearing races shall be magnetized using the wet continuous method. Use a 3/4 inch central conductor in each of four quadrants near the ID at 2500 amperes minimum DC. Inspect for longitudinal cracks. Other service defects such as tight surface cracks caused by fatigue are more readily detected by longitudinal magnetization. Magnetize longitudinally at 3000 ampere turns. Inspect and note particularly defects breaking over the end face radius. Rollers may be magnetized by either the wet continuous or wet residual method. When utilizing the wet continuous or the wet residual method, the current shall be 1000 amperes per inch of diameter (a 1/2 inch diameter roller will require 500 amperes). When the wet residual method is employed, the current required will be 1350 amperes per inch of diameter. Magnetize rollers using the end-to-end method. Indication of nonmetallic inclusions are acceptable within the limits in table 6-5.

NOTE

Magnetic particle inspection of balls is not required or recommended.

6-45. CRANKSHAFT REAR END. Magnetic particle inspect crankshaft rear ends that have been reworked to remove crack indications in the nitrided case at the clamp bolt area. Use the coil method on the Magnaflux machine.

6-46. RESIN COATED INTERNAL ENGINE PARTS. Resin coated internal engine parts do not require stripping of the resin coat for magnetic particle inspection. The presence of resin will not hide any defects that magnetic particle would reveal had the resin been removed or omitted. However, operators may strip the resin if they so desire. For stripping procedure, refer to the applicable paragraph in this section. Remove any loose flaky resin coating. Touch up surface, treat as necessary. Apply resin to exterior magnesium parts and internal induction areas and impeller. Do not apply resin coating to oil-wetted interior areas.

6-47. Resin coated parts requiring magnetic particle inspection by the end-to-end contact method must have the resin removed from the contacting surfaces to ensure good contact. Clean the surfaces by lightly polishing with crocus cloth. Only a very small area need be cleaned. When magnetic inspecting resin coated parts, a contrasting color powder should be used. For example, if a green colored resin is used initially on an engine part, it will turn black after engine has been in operation, consequently, when this occurs, a red powder will provide a contrasting color.

6-48. PENETRANT INSPECTION. Penetrant inspection is a nondestructive test for detecting cracks which are open to the surface in any non-porous material. It is the only method that can be used on non-ferrous metals. Magnetic particle inspection is usually recommended for ferrous metals because it is easier and faster to use than penetrant inspection and it can pick up subsurface defects.

TABLE 6-5. MAGNETIC PARTICLE INSPECTION LIMITS FOR ANTI-FRICTION BEARINGS

Location	Limit	Disposition
Ball or Roller Paths of Inner and Outer Races	Sub-surface or hairline indications not exceeding 1/8 inch in length.	Acceptable
	Total length of all indications not exceeding 3/8 inch.	Acceptable
	A minimum separation of one inch between indications.	Acceptable
	Indications within 1/16 inch of either edge.	Reject
All Other Surfaces of Inner and Outer Races	Sub-surface or hairline indications not exceeding 3/8 inch in length.	Acceptable
	Total length of all indications not exceeding 5/8 inch.	Acceptable
	A minimum separation of one inch between indications.	Acceptable
Roller OD surfaces	A maximum of four hairline surface indications on the OD of the roller, provided the length of any individual indication does not exceed 1/16 inch.	Acceptable
	A maximum of four sub-surface indications on the OD of a roller, provided the length of any individual indication does not exceed 1/18 inch.	Acceptable
	The total length of all indications not exceeding 3/8 inch.	Acceptable
	A 1/4 inch minimum separation between parallel indications.	Acceptable
End Faces of Rollers	A maximum of 12 sub-surface or surface indications in each end face, provided the diameter or length of any individual indication does not exceed 1/32 inch.	Acceptable
	Minimum separation of 1/8 inch between indications in any direction.	Acceptable

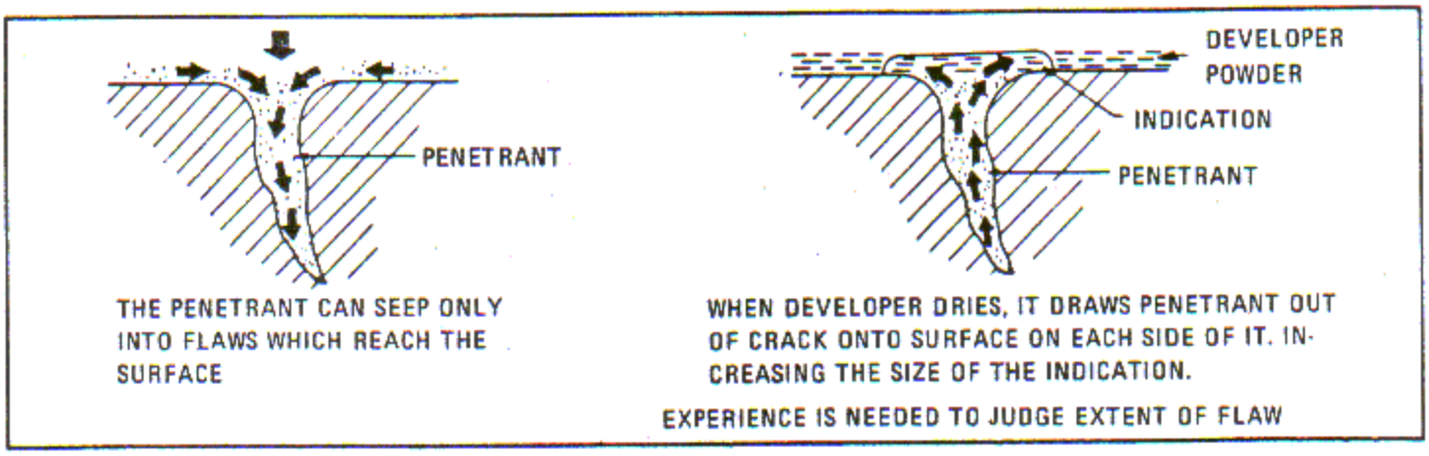

Figure 6-2. Penetrant Inspection

6-49. Penetrant inspection depends upon a penetrating liquid entering and remaining in an opening in the surface of the part being inspected. The application of a "developer" makes the penetrant visible in the defect. See figure 6-2. This type of inspection will detect surface defects such as fatigue cracks, grinding and heat treat cracks, machining tears, lack of bond between joined metals at the exposed laminar edge, welding shrink cracks, etc.

6-50. The penetrant may be a fluorescent type requiring that parts be inspected in a dark room under ultra-violet light (black light); or it may be a dye type which is visible in daylight.

6-51. PREPARATION OF PARTS FOR PENETRANT INSPECTION. Preparation of parts to be inspected prior to the actual processing is of great importance. The material must be clean and free from foreign materials that may clog or conceal the flaws or cause confusing indications. Use vapor degreasing as a cleaning process whenever possible, since the solvents clean out soluble contaminants. Remove hard surface contaminants such as carbon, engine varnish, paint, etc., by chemical dips and washings. Do not use shot blast, emery cloth, steel wire brushes or metal scrapers. These will cover up discontinuities by peening or cold working the surface, particularly on soft materials. Grit blasting with soft grit such as nut hulls, seeds, vapor blast, or brushing lightly with a soft wire brush is not as objectionable on hard materials (Rockwell C-40 or harder).

6-52. Parts Requiring Penetrant Inspection. The following parts are to be penetrant inspected at overhaul:

Cylinder Heads
Valves
Supercharger Rear Covers
Supercharger Rear Housings
Supercharger Front Housings
Diffuser Plates
Impellers
Impeller Inducers
Crankcase Front Section
Crankshaft Front and Rear Sections (chrome plated main bearing thrust faces only)
Pistons

6-53. TYPES OF PENETRANT INSPECTION.

6-53A. Fluorescent Penetrant Inspection (Zyglo). Materials listed can be obtained from the Magnaflux Corp., Chicago, Illinois. Perform the test as follows:

NOTE

This is the only fluorescent penetrant inspection recommended for silver plated parts.

a. Clean part in a vapor degreaser.

b. Directly after removal from the degreaser, immerse part in a bath of Zyglo penetrant ZL-1B, or equivalent, for at least 1/2 hour.

c. Remove the part from the penetrant bath and wash with a water spray.

d. Apply Pentrex Developer ZP-4 or ZP-5, or equivalent, to parts that are not silver plated. ZP-4 is a dry developer (powder). When used, first dry the part in an oven at 66 - 93°C (150-200° F). Then dust on the developer and shake off the excess. ZP-5 is a wet developer. When used, immerse the part in the developer directly after the wash (step c). Drain off the excess developer. Then place part in oven at 66 - 93°C (150 - 200° F) until dry.

NOTE

Do not use a developer on silver plated parts. Heat these parts to a temperature of 104 - 121°C (220 - 250° F) on a hot plate, or to a temperature of 66 - 104°C (150 - 220° F) in an oven.

e. Inspect the part in a dark room under ultraviolet light.

6-54. Post Emulsification Fluorescent Penetrant Inspection (Pentrex). Materials listed can be obtained from the Magnaflux Corp., Chicago, Illinois. Perform the test as follows:

a. Clean part in a vapor degreaser.

b. Immerse part in a bath of Pentrex Penetrant ZL-2, or equivalent for at least 15 minutes, or dip the part and allow to drain for at least 15 minutes.

c. Immerse the part in Emulsifier ZE-3, or equivalent, and drain for 30 - 60 seconds.

d. Wash part in warm water 27 - 60°C (80 - 140° F).

NOTE

To obtain the greatest sensitivity, it is important that the part be washed within 30 - 60 seconds after it was first dipped in the emulsifier.

e. Apply Pentrex ZP-4 Dry Developer or Pentrex ZP-5 Wet Developer, or their equivalent, to the part as explained in paragraph 6-53A.

f. Inspect the part in a dark room under ultraviolet light.

6-55. Post Emulsification Fluorescent Penetrant Inspection (Super-Pentrex). Materials listed can be obtained from the Magnaflux Corp., Chicago, Illinois. Perform the test as follows:

a. Clean the part in a vapor degreaser.

b. Immerse part in a bath of Pentrex Penetrant ZL-22, or equivalent, for at least 15 minutes, or dip the part and allow to drain for at least 15 minutes.

c. Immerse the part in Emulsifier ZE-3, or equivalent, and drain for 20 - 30 seconds.

d. Wash part in warm water 27 - 60°C (80 - 140° F).

NOTE

To obtain the greatest sensitivity, it is important that the part be washed within 20 - 30 seconds after it was first dipped in the emulsifier.

e. Inspect the part in a dark room under ultraviolet light to ensure complete removal of all excess penetrating oils from the surface. Rewash if necessary.

f. Apply Pentrex ZP-4 Dry Developer or Pentrex ZP-5 Wet Developer, or their equivalent, to the part as explained in paragraph 6-53A.

g. Inspect the part in a dark room under ultraviolet light.

6-56. Dye Penetrant Inspection. Materials for performing dye penetrant inspections can be obtained from the following source under their trade names. Instructions with the kits are complete and will not be repeated here. The chief advantage of this type of inspection is that it is inexpensive and portable.

a. Spotcheck - Magnaflux Corp., Chicago, Illinois.

b. Dy-Chek - Turco Products Inc., Los Angeles 54, California.

c. Ardrox 996 Flow Detecting Fluid and Developer - Brent Chemical Products Ltd., Commerce Road, Brentford, Middlesex, England.

6-57. ANTI-FRICTION BEARINGS INSPECTION.

6-58. NEW BEARING INSPECTION.

CAUTION

Forcible disassembly of a bearing coated with congealed preservative can result in cage damage.

a. Heat the bearing to 79-91°C (175 - 195° F) to remove congealed preservative prior to disassembly for inspection.

NOTE

A suitable vapor degreaser may be utilized to remove the preservative and heat the bearing.

b. Visually inspect the bearing for damage that may have occurred in shipping or handling.

c. Check the cage clearance. Refer to paragraph 6-61.

NOTE

After a bearing is installed on the propeller shaft or crankshaft, the cage clearance must be rechecked.

d. Measure and record the inner race ID. This dimension will be used for calculation of fit and record purposes. Refer to paragraph 6-63.

e. Inspect the bearing for internal radial looseness as instructed in paragraph 6-62.

NOTE

The information required in steps d and e is sometimes provided on the tag packed with the bearing.

f. If the specified limits cannot be maintained, return the parts through the regular spare parts channel.

6-59. USED BEARING INSPECTION. Figure 6-3 identifies the various ball and roller bearing components. This figure also relates the proper nomenclature for each part.

a. Thoroughly clean the bearing and magnetic particle inspect as outlined in paragraph 6-44.

b. Visually inspect the bearing. Refer to paragraph 6-60.

c. Measure the inner race ID as instructed in paragraph 6-63. Compare this dimension with the previously recorded dimension to determine evidence of deformation or severe wear.

d. Perform the same series of inspections as specified in paragraph 6-58, steps c and e.

6-60. Used Bearings, Visual Inspection. Visual inspection is performed without the use of magnification. Refer to Table 6-2 for definitions of various conditions. Table 6-6 provides the necessary limits and dispositions to be utilized in this procedure.

CAUTION

Do not recondition bearings by altering the internal radial looseness or axial end movement, removing balls from swaged cages, or peening, staking or swaging of cage separators. Refer to paragraph 6-219 for reconditioning procedure.

6-61. CAGE CLEARANCE INSPECTION. Inspect ball bearings and roller bearings for adequate minimum cage clearance between the bearing cage and its piloted surface.

a. Use Table 6-7 in conjunction with steps b and c for cage clearance limits and location of pilot surfaces.

b. With the bearing flat on a surface plate, insert a piece of the appropriate minimum size wire feeler stock between the cage and the bearing race surface it pilots on. Move the gage wire around the entire circumference of the cage pilot surface.

c. Do-not permit either the inner or outer race to rotate. The cage, however, shall be permitted to move diametrically to permit the gage wire to be moved through all 360 degrees of the pilot surface circumference.

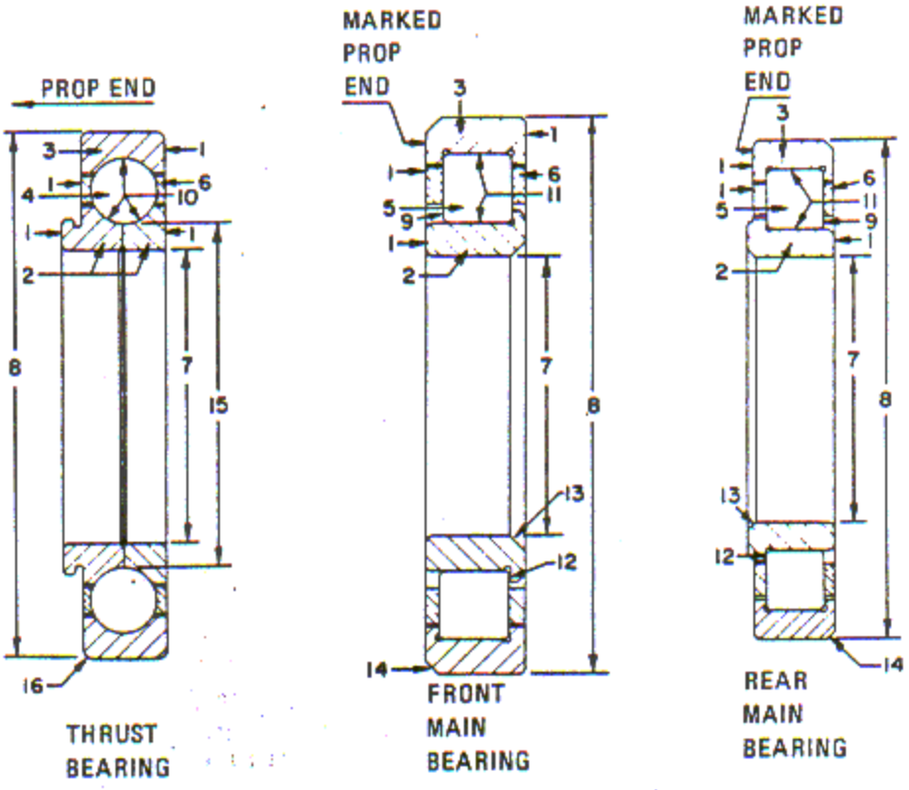

1. IDENTIFICATION MARKS
2. INNER RACE
3. OUTER RACE
4. BALL
5. ROLLER
6. CAGE
7. INNER RACE ID
8. OUTER RACE OD
9. ROLLER END
10. BALL PATHS
11. ROLLER PATHS
12. INNER RACE FLANGE
13. INNER RACE ID CHAMFER
14. OUTER RACE OD CHAMFER
15. INNER RACE BALL PATH DIAMETER
16. OUTER RACE CORNER RADIUS

Figure 6-3. Anti-Friction Bearing Nomenclature

TABLE 6-6. ANTI-FRICTION BEARING INSPECTION LIMITS

Bearing Component	Discrepancy	Limits	Disposition
All	Cracks, burns, spalling or corrosion	Not acceptable.	Reject.
All	False brinelling	Not acceptable if sufficient to obliterate any of the grinding marks in the affected area.	Reject
All	Staining due to lubricant breakdown or corrosion	Acceptable if staining can be removed with crocus cloth, Federal Specification, P-C-458, or Furlon Chemical Cleaner (Wyandotte Corp., Wyandotte, Michigan).	Reject if staining cannot be removed.
Cages	Out-of-round	Crankshaft bearing cages are acceptable if bearing can be freely assembled prior to reconditioning. (This rework is not authorized for any propeller shaft ball or roller bearing).	Tap OD gently with a rawhide or soft face mallet to true up.
	Scoring, metal transfer or pick-out on the cage pilot surface, feathered edges or bulging pockets	Not acceptable.	Reject.
Balls and Rollers	Pits	Acceptable, provided no individual pit exceeds 0.010 inch in length or width, and minimum separation between pits is twice the length of the longer pit.	Reject if limits are exceeded.
	Inclusions	Not acceptable.	Reject.
	Indentations	Acceptable if not longer than 0.030 inch on balls or 0.060 inch on rollers. Minimum acceptable separation shall be twice the length of the longer indentation. Sum total length of all indentations shall not exceed 1/4 the diameter of the ball or roller.	Reject if limits are exceeded.

TABLE 6-6. ANTI-FRICTION BEARING INSPECTION LIMITS (Cont'd)

Bearing Component	Discrepancy	Limits	Disposition
Balls and Rollers (Cont)	Scoring	Acceptable if circumferential score marks do not exceed 0.010 inch in width and have a minimum separation of 1/8 inch; not more than three per linear inch of bearing path. Superficial score marks that cannot be felt with a fingernail or a 0.020 inch radius scriber shall be disregarded.	Reject if limits are exceeded.
	Non-metallic inclusions	Not acceptable on balls.	Reject.
		Acceptable on rollers if the length does not exceed 1/16 inch and the width does not exceed 0.002 inch. The sum total length shall not exceed 1/8 inch and the minimum separation between inclusions shall be 1/4 inch. Inclusions shall be a minimum of 1/16 inch from any edge.	Reject if limits are exceeded.
Ball and Roller Paths	Pits	Acceptable if pits do not exceed 0.020 inch in length and minimum separation is twice the length of the longest pit.	Reject if limits are exceeded.
	Pit clusters (two or more pits in one area not exceeding 1/4 the width of the bearing path)	Any number acceptable, provided the minimum separation between clusters is twice the width of the bearing path.	Reject if limits are exceeded.
	Inclusions	Not acceptable.	Reject.
	Indentations	Acceptable if not more than 1/32 inch in length and not more than three per square inch of bearing path. Minimum separation shall be twice the length of the longer indentation.	Reject if limits are exceeded.

TABLE 6-6. ANTI-FRICTION BEARING INSPECTION LIMITS (Cont'd)

Bearing Component	Discrepancy	Limits	Disposition
Ball and Roller Paths (Cont)	Defects within 1/16 inch of any radius or fillet at edge of the rolling element path	Not acceptable.	Reject.
	Defects greater than 1/16 inch that cross rolling element path	Not acceptable.	Reject.
	Scoring	Axial score marks.	Reject.
		Circumferential score marks are acceptable, provided the width does not exceed 0.010 inch and the minimum separation between any two score marks is 1/8 inch. Disregard superficial marks that cannot be felt with a fingernail or a 0.020 inch radius scriber.	Reject if limits are exceeded.
	Non-metallic inclusions	Acceptable if the maximum length of each inclusion does not exceed 1/8 inch and the maximum width does not exceed 0.002 inch. The minimum separation between inclusions shall be one inch and the sum total length of all inclusions per bearing shall not exceed 3/8 inch. No inclusion is acceptable if it is closer than 1/16 inch to any edge.	Reject if limits are exceeded.
	Burning (temper coloring)	Acceptable if the coloring can be removed with crocus cloth, Federal Specification P-C-458.	Reject if temper coloring cannot be removed.
	Staining due to lubrication breakdown or corrosion	Acceptable, provided the staining can be removed with Furlon Chemical Cleaner (Wyandotte Corp., Wyandotte, Michigan) and the limits for pits due to corrosion are not exceeded.	Reject if staining cannot be removed or pit limits have been exceeded.

TABLE 6-6. ANTI-FRICTION BEARING INSPECTION LIMITS (Cont'd)

Bearing Component	Discrepancy	Limits	Disposition
Boundary Surfaces (Inner Race Bore, Outer Race, OD and Side Faces of Inner and Outer Races)	Pits	Acceptable if pits do not exceed 0.030 inch in width or length and the minimum separation is twice the length of the longer pit. CAUTION Do not use a stone on ball or roller paths.	Reject if limits are exceeded.
	Indentations	Acceptable if they do not exceed 1/16 inch in length or width. Minimum separation shall be twice the length of the longer indentation. Remove raised metal adjacent to any indentation with a suitable India stone.	Reject if limits are exceeded.
	Scoring	Detectable by a fingernail or 0.020 inch radius scriber on the cage piloting surfaces of either inner or outer race.	Reject.
		Acceptable on bore and OD surfaces, provided the depth or width does not exceed 0.010 inch and the minimum separation between each mark is 1/16 inch.	Reject if limits are exceeded.
	Non-metallic inclusions	Acceptable if visual surface inclusions do not exceed 1/4 inch in length and 0.005 inch in width. The minimum separation between inclusions shall be 1/2 the width of the bearing path. The number of inclusions acceptable in each area shall not exceed the number of inches in the diameter of the bearing path.	Reject if limits are exceeded.

TABLE 6-7. CAGE CLEARANCE AND INTERNAL RADIAL LOOSENESS LIMITS

P/N	Vendor	Minimum Cage Clearance	Location of Pilot Surfaces	Internal Radial Looseness	Recommended Pressure
21D92	MRC	0.022 in.	Cage ID, Inner Race OD	0.0015 - 0.0019	33 lbs
	SKF	0.010 in.	Cage OD, Outer Race ID	0.0011 - 0.0017	33 lbs
21D93	MRC	0.019 in.	Cage ID, Inner Race OD	0.0026 - 0.0032	33 lbs
	SKF	0.010 in.	Cage OD, Inner Race ID	0.0013 - 0.0020	33 lbs
21D334	MRC	0.029 in.	Cage ID, Inner Race OD	0.0026 - 0.0032	33 lbs
	SKF	0.010 in.	Cage OD, Outer Race ID	0.0013 - 0.0020	33 lbs
155D49	MRC	0.034 in.	Cage OD, Outer Race ID	0.0014 - 0.0038	33 lbs
	SKF	0.010 in.	Cage OD, Outer Race ID	0.0014 - 0.0038	33 lbs
155D50	MRC	0.030 in.	Cage OD, Outer Race ID	0.0014 - 0.0038	33 lbs
	SKF	0.010 in.	Cage OD, Outer Race ID	0.0014 - 0.0034	33 lbs

d. Bearings with inadequate cage clearance shall be rejected.

6-62. INTERNAL RADIAL LOOSENESS (FREE STATE). The pressure listed in Table 6-7 when applied to the outer race during this inspection shall be applied gradually to avoid damage to any of the bearing components. Adhere to the specified pressure as closely as possible to prevent errors in readings due to improper seating of the rolling elements. A controlled means of applying this pressure is desirable in order to obtain the optimum repeatability of readings. Air, hydraulic, spring pressure or dead weights may be utilized to apply the recommended load.

NOTE

Permit all gaging equipment and bearings to stabilize at room temperature prior to taking measurements. The desired temperature is 20°C (68°F).

a. Lubricate the bearing with engine oil, Specification SAE 10, or equivalent.

b. Secure the inner race to a horizontal flat plate with a circular shim (1, figure 6-4) 0.002 - 0.003 inch thick between the bearing race and the flat plate. The shims will ensure the outer race will not contact the plate by axial movement.

NOTE

The use of three 1/2 inch thick spacers (3) located 120 degrees apart, between the shim and the flat plate, will facilitate the handling of the outer bearing race.

c. Mount a suitable indicator (2), graduated in 0.0001 inch increments, against the outer race OD and in line with the ball or roller center.

d. Apply pressure, refer to table 6-7, to the bearing outer race in direction A, then move race upward and downward slightly to ensure proper seating of the rolling elements.

e. When the rolling elements have seated, set the dial indicator (2) on zero or record the reading.

f. Without rotating the outer race, gently apply pressure, refer to Table 6-7, in direction B, then move race to ensure proper seating of the rolling elements.

g. When the rolling elements have seated, record the dial indicator (2) reading or difference between the reading taken in step e. whichever is applicable.

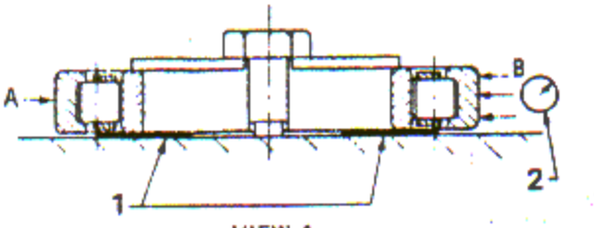

VIEW A

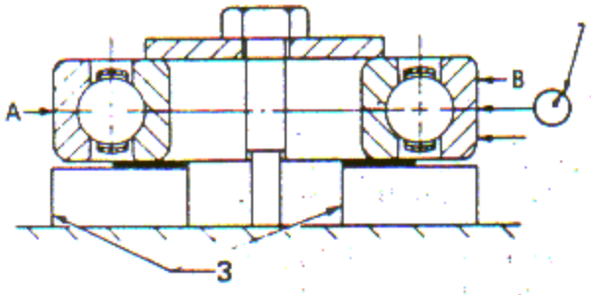

VIEW B

1. SHIMS
2. INDICATOR
3. SPACERS (3) (OPTIONAL)

Figure 6-4. Ball and Roller Bearings Internal Radial Looseness Checking

NOTE

If the indicator needle does not pass through a clear maximum or minimum respectively, the shims (1, figure 6-4), shown in view A, are probably too thin. Ordinary writing paper may be used for the shims; however, it may be necessary to use several thicknesses.

h. Take a minimum of six readings at approximately equal intervals in one revolution of the outer race. Record the average of the readings as the actual free state internal radial looseness for the bearing being measured.

NOTE

By using the average of at least six readings, the effect of permissible out-of-roundness will be eliminated. However, there must be no perceivable binding at any point of rotation.

i. Propeller shaft ball and roller bearings which do not have an average (free state) internal radial looseness within the limits specified in Table 6-7, shall be rejected.

j. Crankshaft bearings having an average (free state) internal radial looseness in excess of the specified limits in Table 6-7, shall be rejected.

k. Crankshaft bearings having an average (free state) internal radial looseness below the specified limits may be installed, provided a minimum calculated residual internal radial looseness of 0.0005 inch can be maintained. Refer to paragraph 6-64.

6-63. INNER RACE ID MEASUREMENT.

a. Measure the ID of the inner race at a minimum of three locations 90 degrees apart. Use a Precisionaire Column Instrument, Model 153-1, with Adjustable Airbore Gage (3-12 inches) Kit No. D70729-IM (Sheffield Corp., Dayton 1, Ohio). Set the gage using Hoke Master Gage Blocks (Pratt and Whitney, Division of Niles-Belmont-Pond Co., Charter Oak Blvd., West Hartford 1, Conn.).

NOTE

This tooling will provide the required accuracy of 0.0001 inch.

b. An average of the readings taken in step a shall be considered the actual ID dimension.

c. Record the actual ID dimension of the bearing. Using this dimension, calculate the interference fit between the bearing and the shaft. Refer to references 5, 203 and 208, Table of Limits, Section IX.

NOTE

In the event these fits cannot be complied with, the ID of the inner race of crankshaft bearings only may be copper plated to a maximum of 0.001 inch thick, provided the maximum run-out of the ID relative to the OD roller path after plating does not exceed 0.0005 inch.

6-64. INTERNAL RADIAL LOOSENESS (RESIDUAL).

CAUTION

Do not, under any circumstances, assemble a shaft and bearing combination which does not have a minimum residual internal looseness of 0.0005 inch after assembly. Select shafts and/or bearings as necessary to meet this requirement.

The calculated residual internal radial looseness is determined by subtracting the entire value of the calculated fit, from the average (free state) internal radial looseness obtained in paragraph 6-62.

6-65. CRANKCASE FRONT SECTION INSPECTION.

6-66. PROCEDURE. Inspect crankcase front section as follows:

a. Inspect the propeller shaft thrust bearing liner for wear. Reject the liner if the ID is worn beyond 7.0895 inches.

b. Inspect area around the oil transfer dowel holes for damage or corrosive pitting that may preclude a good seal by oil transfer dowel oil seal rings upon reassembly. Tag damaged areas for repair.

c. Examine the numbers 4, 5, 6 and 7 intake valve tappet guide bores for existing oil feed holes that have not been plugged. Mark such locations for repair.

6-67. PROPELLER SHAFT AND REDUCTION GEAR INSPECTION.

6-68. PROPELLER SHAFT SLEEVE AND FRONT AND REAR BUSHINGS.

NOTE

Remove the sleeve and bushings at every OTHER overhaul period, unless metal contamination or dimensional wear requires replacement.

a. If removal of the sleeve or bushing is not indicated, pressure flush the propeller shaft using petroleum solvent, Federal Specification P-S-661.

b. Check to ensure that all dimensional limits are met.

c. When, after one tour of service, inspection indicates removal is not required, mark X on the rear bushing rear face adjacent to the retaining pin. Rubber stamp the mark with acid in accordance with paragraph 6-11, using a 1/8 inch high character. This mark shall be used to identify those bushings requiring mandatory removal when the engine is next overhauled.

6-69. PROPELLER SHAFT SPACER SEATING SURFACE INSPECTION.

a. Using a micrometer or suitable equipment, examine the propeller shaft thrust bearing spacer location for any significant diametrical deviations, particularly in the area immediately forward of the front oil hole.

b. If the diameter adjacent to the front oil hole varies more than 0.0015 inch from the average diameter at the location, recondition the surface to accommodate a standard spacer or a 0.003 inch undersize spacer, as appropriate, in accordance with paragraph 6-783.

6-70. PROPELLER SHAFT THRUST BEARING NUT INSPECTION.

a. Examine thrust bearing nut front face for wear and damage.

NOTE

Several light pits and/or scratches shall not be cause for rejection unless warranted by other factors such as excessive wear, excessive galling, etc.

b. Ensure front and rear faces are parallel to each other within 0.002 inch.

c. Thrust bearing nuts may be ground on the front face as necessary to recondition them.

NOTE

Minimum dimension that propeller shaft thrust bearing nuts can be reconditioned to is 0.910 inch. Thrust bearing nuts that cannot be satisfactorily reconditioned within the 0.910 inch dimension can be ground and chrome plated as instructed in paragraph 6-778.

6-71. STATIONARY REDUCTION GEAR (R1820-76C, -76D, -86A, -86B).

a. Inspect mating surface around oil transfer holes for flatness. Lap subject part to facilitate inspection for flatness. Refer to paragraph 6-284 for lapping instructions. Lapping of surfaces around the oil transfer holes must be accomplished in order to insure satisfactory sealing characteristics. Maintain 0.257 - 0.255 inch dimensions as shown in figure 6-5.

6-72. REDUCTION GEAR PINION CARRIER TRUNNIONS AND TRUNNION THRUST FACES. (R1820-80A, -80B). Reduction gear pinion carrier trunnions and trunnion thrust faces must meet the following inspection criteria.

a. Trunnion diameters must be circular, parallel, and straight within 0.0007 inch.

b. Trunnions must be equally spaced to each other within 0.001 inch for adjacent trunnions and within 0.002 inch for any two non-adjacent trunnions measured on fixture fitting from 0.000 to 0.001 inch tight on diameter A. Refer to figure 6-70.

c. Trunnion surface finish of 10 microinches rms or better is required. Maintain a surface finish of 16 microinches rms or better on the trunnion thrust face.

d. Minimum allowable diameter for standard trunnion is 0.7173 inch. Diameters for trunnions ground undersize for undersize bushings must correspond to dimensions given in paragraph 6-301.

e. Trunnion height, measured from thrust face, must be 0.958 - 0.960 inch. See figure 6-69.

NOTE

Reduction gear pinion carrier trunnions and trunnion thrust faces which do not meet preceding requirements must be reconditioned in accordance with instructions in paragraphs 6-300 and 6-302.

6-73. STATIONARY REDUCTION GEAR AND REDUCTION DRIVE GEAR PINION GEAR TEETH. Gear teeth must meet the following inspection criteria.

a. The total defective area of any tooth affected by pitting, spalling and unusual wear patterns may not exceed 20 percent of the contacting surface.

b. Spalled areas shall be blended out.

c. No surface defect greater than 0.020 inch in depth is permitted.

6-74. POWER SECTION INSPECTION.

6-75. CAM INSPECTION.

a. Inspect the cam tracks for a spalling condition and scrap any cam showing such a condition.

NOTE

A spalled cam has been subjected to excessive loads which has induced sub-surface fatigue. Regrinding may clean up the surface condition but will not correct the sub-surface condition. It will only bring it closer to the operating surface.

b. Inspect the cam tracks for any pitting. Scrap any cam showing a break in the case.

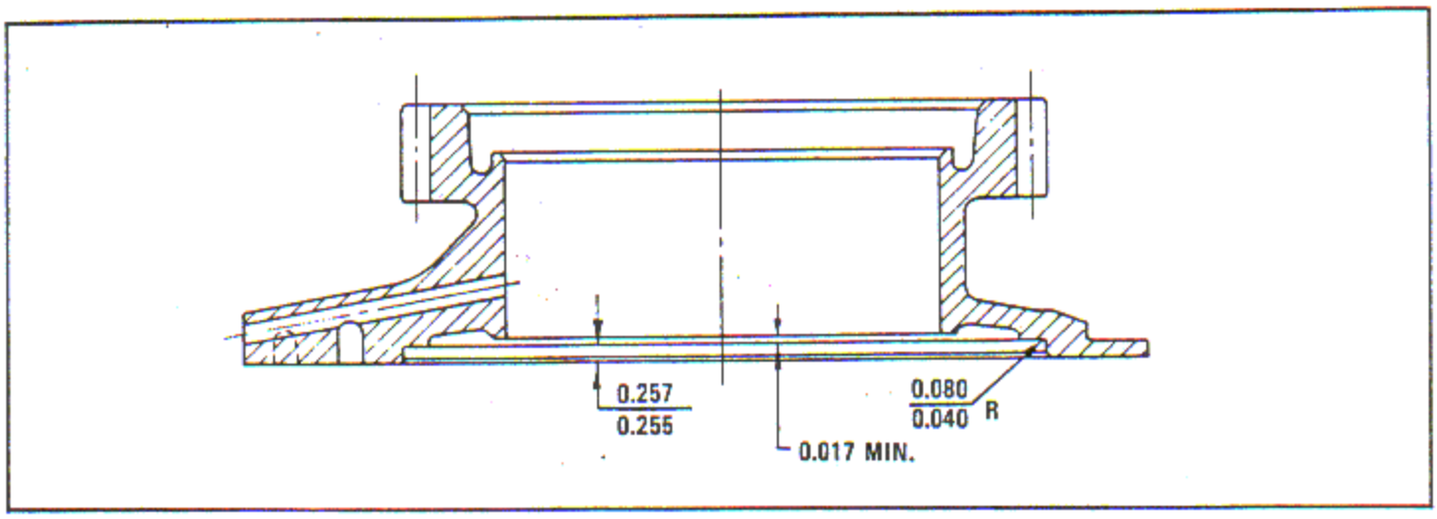

Figure 6-5. Stationary Reduction Gear Inspection

c. Inspect the cam tracks for dents. Cam tracks having five dents, or less, per 0.3750 inch square, do not require regrinding, provided no dent exceeds 0.0937 inch across its major axis. However, the cam track surfaces shall be vapor blasted to obtain the desired 16 - 25 microinch rms surface finish as instructed in paragraph 6-325.

d. Inspect acceptable cam tracks for the required 16 - 25 microinch rms surface finish. Vapor blast cam tracks that do not meet this requirement. Refer to paragraph 6-325.

e. Recondition acceptable cams by grinding and vapor blasting or vapor blasting, whichever is applicable. Request disposition from the Aviation Supply Office.

NOTE

Cam diameters may be reduced 0.020 inch maximum below blueprint (0.010 inch maximum material removal per track), provided case hardness requirements meet Rockwell C60-63. The reground surfaces must have an 8 - 15 microinch rms surface finish prior to the vapor blasting.

f. Identify reground cams by vibro engraving a symbol on the side of the lobe bearing the cam part number, or the opposite side. The symbol, explained below, shows when and how often the particular cam has been reground.

	Symbol
First regrind October 1957	G1-1057
Second regrind March 1958	G2-358

6-76. CRANKCASE MAIN SECTION CYLINDER DECKS.

6-77. NON-COPPER PLATED CRANKCASES. The cylinder decks on non-copper plated crankcases must be reconditioned at each overhaul to remove surface damage such as fretting corrosion, galling, spalling or abrasion resulting from steel-to-steel contact or when the flatness of the deck surface exceeds 0.002 inch. Refer to paragraph 6-326 for reconditioning instructions.

6-78. COPPER PLATED CRANKCASES. The cylinder decks on copper plated crankcases must be reconditioned at overhaul if the copper plate is worn through so as to expose the steel. If there is no evidence of surface damage to the steel, the crankcase should be stripped and re-copper plated. Refer to paragraph 6-884. If the copper plate is worn through and fretting corrosion, galling, spalling or abrasion is evident or the flatness of the deck surface exceeds 0.002 inch, the deck must be reconditioned by grinding. Refer to paragraph 6-326 for reconditioning procedures. If the copper plate has not worn to the extent that steel is exposed, the cylinder decks may be considered acceptable, and no further deck reconditioning or examination for flatness is required.

a. The surface removed shall not decrease the dimension from the centerline axis of the main bearing retainer to the surface of the affected cylinder deck below 10.855 inches, which is 0.015 inch below minimum blueprint dimension.

b. Cylinder decks must be parallel to the centerline of the main bearings within 0.005 inch full indicator reading.

c. The surface finish shall not exceed 50 microinches rms and the surface waviness shall be within 0.002 inch full indicator reading.

d. The chamfer at the deck bore shall be maintained at a diameter of 6.631 - 6.641 inches and a *50 degree ± 30 minute* angle and be concentric with the deck bore within 0.005 inch full indicator reading.

6-79. CRANKCASE MAIN SECTION CYLINDER HOLD-DOWN CAPSCREW HOLE THREADS. (See tool group 18.)

6-80. GENERAL. Check the cylinder hold-down capscrew hole threads with plug gage. If the maximum of six complete turns is exceeded, the crankcase must be replaced or capscrew hole threads reconditioned as instructed in paragraph 6-329.

6-81. CRANKSHAFT INSPECTION.

6-82. CRANKSHAFT CRANKPIN LIMITS.

a. Crankshaft crankpins shall be reground at each overhaul. The crankpin must be circular, parallel and straight within 0.0004 inch and shall have a 4 microinch rms or better finish. Paragraph 6-341 refers.

b. Inspect the front and rear thrust faces for scoring. If scoring is evident, recondition the front face as instructed in paragraph 6-345 and the rear face as instructed in paragraph 6-372.

6-83. CRANKSHAFT FRONT END EXTENSION. Examine the crankshaft front end extension front and rear journals for nicks, scratches, scoring or excessive wear. Journals may be reground up to the maximum regrind limit for use with undersize bushings in accordance with paragraph 6-339 when the following wear limits are encountered:

a. When 0.001 inch maximum taper is exceeded.

b. When 0.001 inch maximum out-of-round is exceeded.

6-84. CRANKSHAFT COUNTERWEIGHT BUSHINGS.

CAUTION

The bronze bearing in the crankshaft rear blade cannot be turned. Its ID axis is not parallel with the crankshaft axis.

Inspect the bushings in the counterweights and in the crankshaft front blade for wear from the counterweight pins. If the bushings are worn 0.002 inch or more in the areas in contact with the counterweight pins, turn the worn bushings in steps of 90 degrees at overhaul to provide new surface for the pins to ride on. Each bushing can be turned three times after original installation. For removal and reinstallation, refer to the applicable paragraph in this section. Ensure that the bushings fit the counterweight or blade with the correct tight fit after turning.

a. Examine marked rear crankshaft counterweight bearings for rotation by placing a straightedge across the approximate centerline of both bearings. If the marks on a bearing are displaced more than one-fourth of an inch from the reference line, bearing replacement is required. Refer to paragraphs 6-353 or 6-365 for bearing removal.

NOTE

Bearings that are not marked are to be replaced.

6-85. CRANKSHAFT FRONT AND REAR MAIN BEARING THRUST FACE RECONDITIONING LIMITS. Check the crankshaft front and rear main bearing thrust faces of the blades for minimum service limits of 1.635 inches and 1.835 inches, respectively. See figure 6-6. Thrust

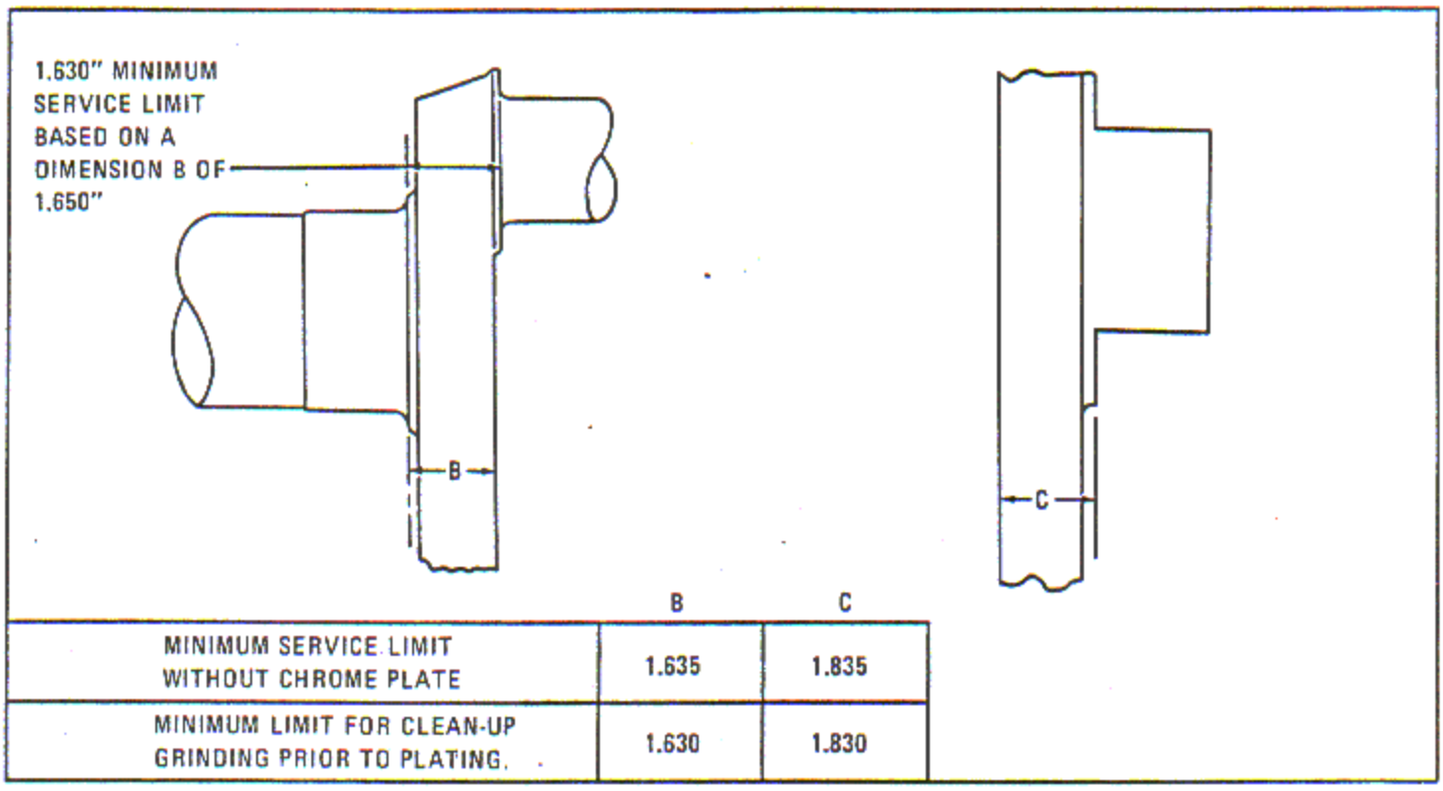

	B	C
MINIMUM SERVICE LIMIT WITHOUT CHROME PLATE	1.635	1.835
MINIMUM LIMIT FOR CLEAN-UP GRINDING PRIOR TO PLATING.	1.630	1.830

Figure 6-6. Crankshaft Front and Rear Main Bearing Thrust Face Reconditioning Limits

faces below this limit but not less than 1.630 and 1.830 inches respectively after complete surface clean-up can be reconditioned by chrome plating and grinding to a final chrome thickness of 0.005 - 0.010 inch.

6-86. CRANKSHAFT COUNTERWEIGHT PINS. Inspect the counterweight pins for galling. Galled pins that will not clean up to a minimum diameter of 1.0265 inches are to be rejected. Grit blast acceptable counterweight pins at each overhaul as follows.

a. Use No. 60 metallic grit, a suitable blast cabinet and 80 - 90 psi air pressure.

b. Blast the surface of the pin until a frosted finish is obtained. Apply grit blast evenly to ensure that the pin will not be out-of-round or tapered.

6-87. PISTON OIL CHECK VALVE LEAKAGE AND OPERATION TEST. Test the piston oil check valve using engine oil, Military Specification MIL-L-6082 Grade 1100, or equivalent, at 71 - 79°C (160 - 175° F). The following oils used at 29 - 35°C (85 - 95° F) are equivalent to the Military Specification.

Tycol Aubodon No. 47	Tidewater Oil Co. 4201 Wilshire Blvd. Los Angeles, Calif.
Standard No. 1260	Standard Oil Co. 500 North Broad St. Elizabeth, N.J.
Vitrea 27	Shell Oil Co. 50 West 50th St. New York, N.Y.
Sunvis No. 16	Sun Oil Co. Walnut and 16th St. Philadelphia, Penn.

a. Apply 3 psi oil pressure to the valve and check for leakage. A maximum leakage of 10 drops per minute is acceptable.

b. Increase pressure and note the point at which the valve opens. Decrease pressure and note the point at which the valve closes. The valve must open and close between 10 and 20 psi.

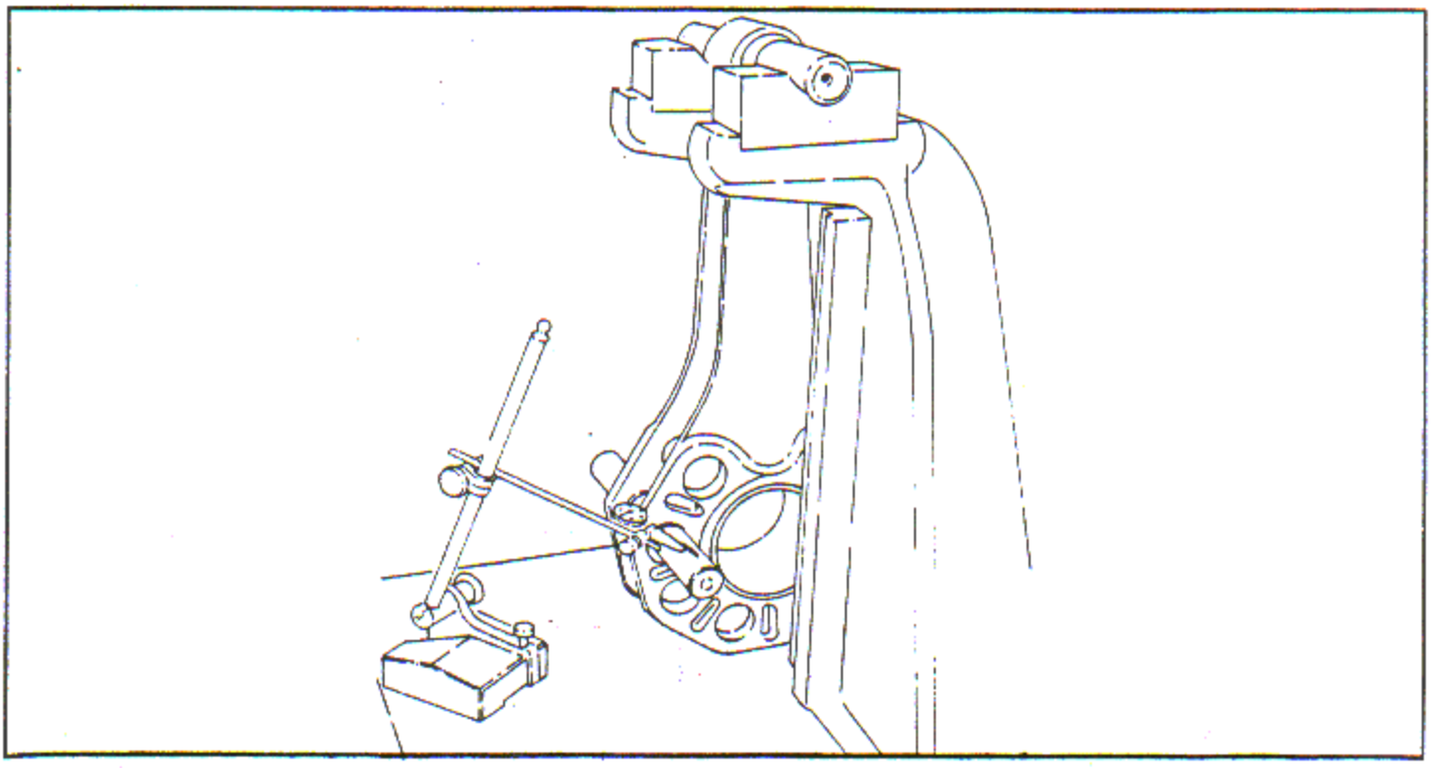

Figure 6-7. Checking Master Rod Horizontal Alignment

NOTE

An alternate test fluid is Military Specification MIL-L-22851 Type II lubricating oil at 71 - 79°C (160 - 175°F).

6-88. MASTER CONNECTING ROD INSPECTION.

6-88A. NICKS AND DENTS. Master rods with nicks or dents are not acceptable and should be rejected. Inspect the inside surface of the master rod flanges around the knuckle pin holes for scoring. If this location is scored, hand polishing of the affected area is permissible.

NOTE

Slight indications produced by "Rockwell" hardness test operation are not cause for rejection. No rework of any kind is required on rods having such indications.

6-89. MASTER ROD HORIZONTAL ALIGNMENT. (See tool groups 72, 82 and 83.)

6-89A. Insert an alignment checking bar in the master rod piston pin bushing. There are six different bars varying in diameter by 0.001 inch. Select a bar from the following list which will provide a select fit.

Alignment Checking Bar	Size (In. Dia)
A	1.4995
B	1.5005
C	1.5015
D	1.5025
E	1.5035
F	1.5045

a. If the piston pin bushing is not in its bore, place piston pin hole alignment bar directly in the piston pin bushing bore. See figure 6-7.

b. Insert knuckle pin hole checking bar in the knuckle pin bore adjacent to the top knuckle pin bore in the master rod.

c. Place the master rod in stand so that the bar in the piston bushing rests on two V blocks on the stand and the knuckle pin checking bar is away from the stand.

d. Take a dial indicator reading on the top surface of the knuckle pin checking bar approximately three inches from the vertical centerline of the master rod. Take another reading in the same relative position on the other end of the bar. If

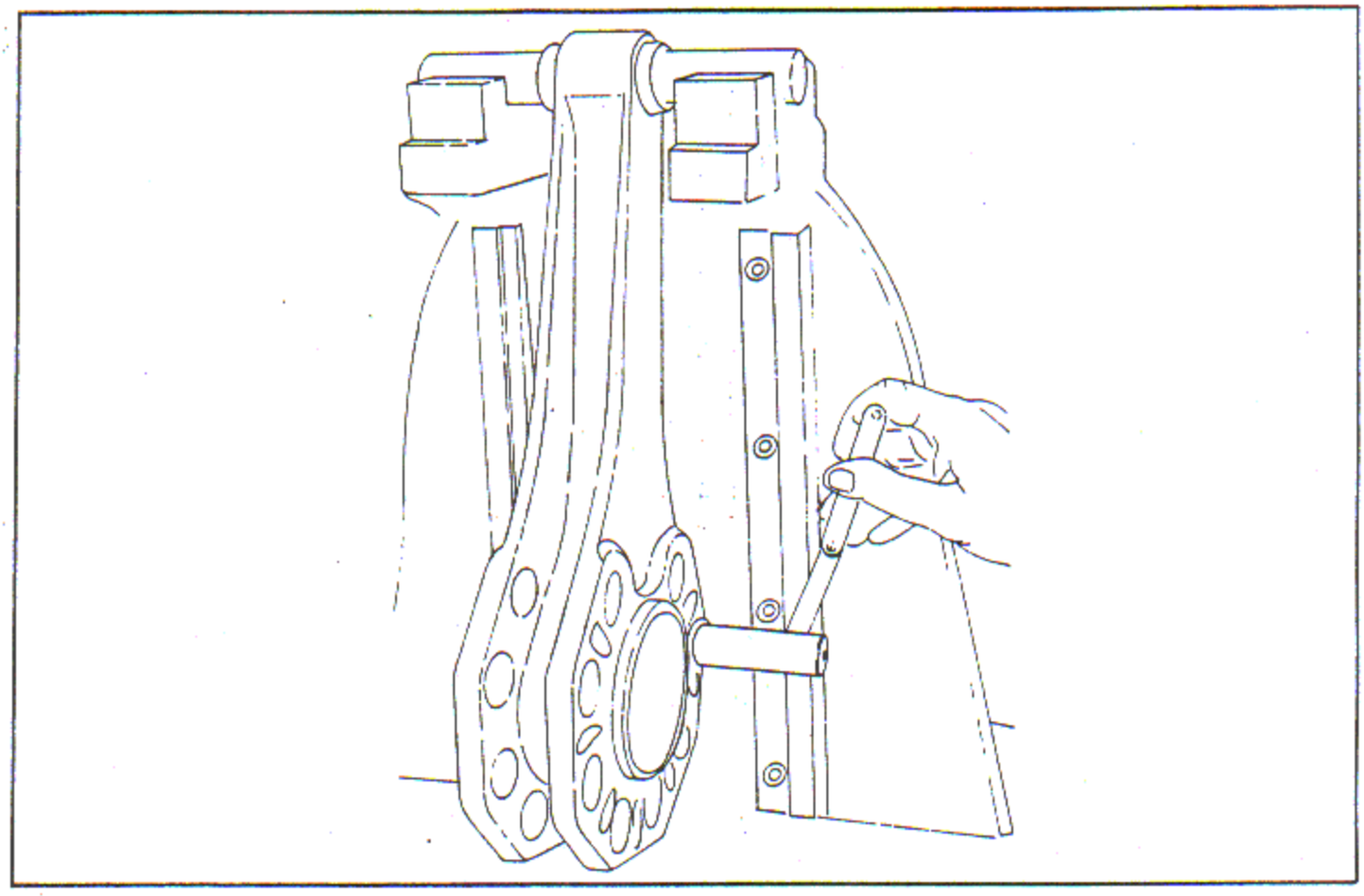

Figure 6-8. Checking Master Rod Vertical Alignment

the difference in readings exceeds 0.004 inch with the piston pin bushing in place, remove the bushing and recheck. If the difference in readings exceeds 0.004 inch, without the bushing, the master rod is unfit for use.

e. Remove the bar from the knuckle pin bore.

6-90. MASTER ROD VERTICAL ALIGNMENT. Insert knuckle pin hole checking bar in the knuckle pin bore on the opposite side of the master rod adjacent to the top bore.

a. With one end of the bar making contact with the stand, check the clearance between the other end of the bar and the other side rail. Use a feeler gage as shown in figure 6-8.

b. If the clearance exceeds 0.010 inch with the piston pin bushing in place remove the bushing and recheck. If the clearance still exceeds 0.010 inch the master rod is unfit for use.

6-91. MASTER CONNECTING ROD BEARING BORE INSPECTION. Inspect the bore for the master rod bearing to be circular, parallel and straight within 0.0003 inch and having a surface finish of 20 microinches rms or better. Hone the bore in accordance with paragraph 6-402 if these conditions are not met.

6-92. MASTER ROD BEARING EROSION LIMITS. Master rod bearings are manufactured of steel, silver plated on the inside and outside diameters, and lead-tin plated over the silver on the inside diameter. Figure 6-9 illustrates imperfections on master rod bearings. Bearings showing less service wear than those illustrated are acceptable, provided the damage is not through the silver to the steel shell. Discard bearings beyond these limits.

6-93. MASTER ROD BEARING OUT-OF-ROUND LIMITS. Check the master rod bearing for out-of-round using a dial indicator and by rolling bearing in a V block on a surface plate.

Physical Condition	Cause	Action
A. CHAFING.		
Chafing usually appears as a reddish brown surface and is not unusual on this type of bearing.	Normal wear.	Accept bearings on which the outside silver surface has been chafed in the master rod bore. See view A. Do not polish or otherwise recondition the bearing to remove chafing. Polish the master rod bore to remove deposits.
B. DENTING AND SCORING.		
a. Depression of the surface metal affecting small areas. b. Deep scratches following the path of travel of the part.	Entrapment of foreign particles between the bearing ID and crankshaft OD	a. Reject bearings having large dents or scores, where the silver has been raised and subsequently polished. See view B, location 1. b. Accept small dents and/or scores as shown in view B, location 2.

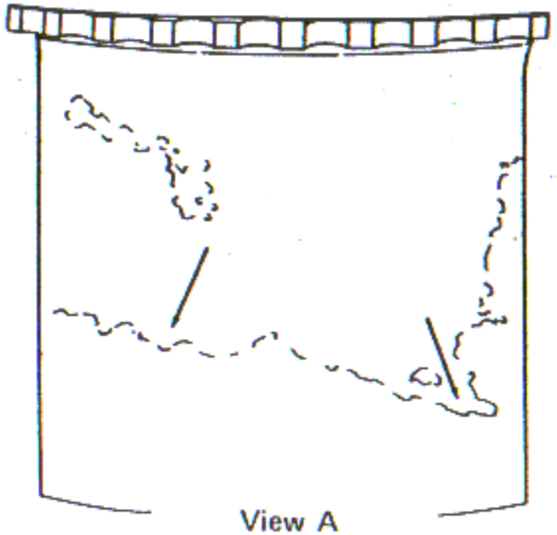

View A

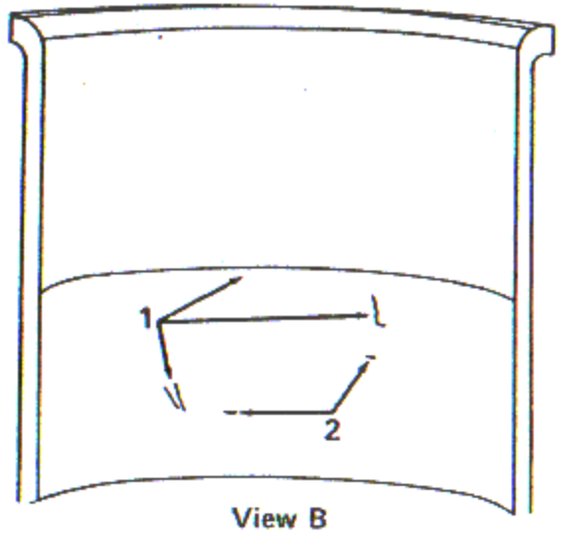

View B

Figure 6-9. Master Rod Bearing Inspection Chart (Sheet 1 of 4)

Physical Condition	Cause	Action
C. WORN PLATING.		
Areas of silver plate exposed where lead-tin plate has been "wiped" away. See view C.	Normal wear.	If any silver is visible on the bearing surface, re-lead-tin plate the bearing prior to installation.
D. FOREIGN INCLUSIONS.		
Small particles of metal imbedded in the lead-tin plate. See view D.	Oil contamination.	Reject all bearings having steel, aluminum or bronze particles and abrasive material particles imbedded in the lead-tin or silver plate.

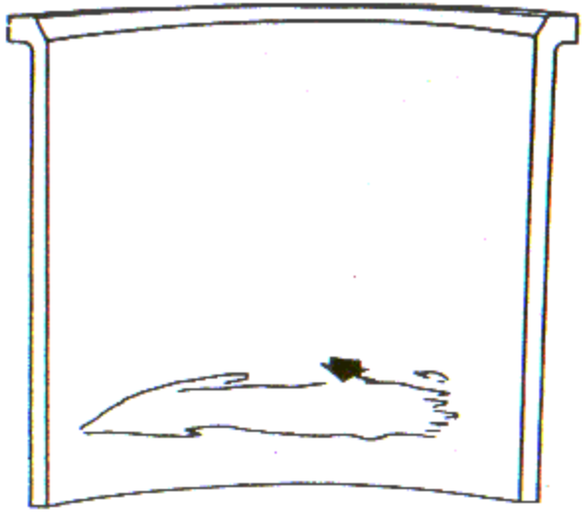

View C

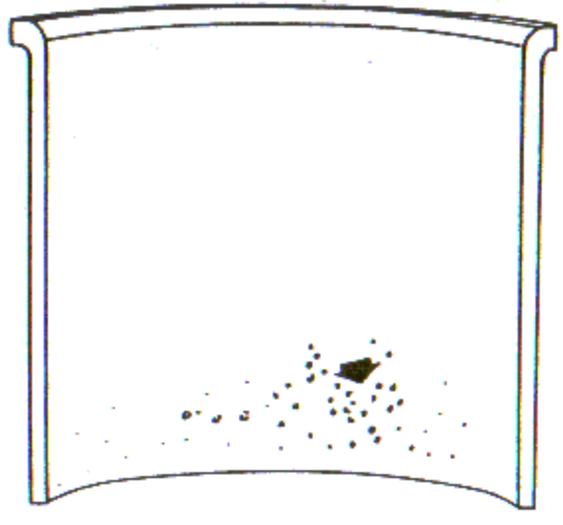

View D

Figure 6-9. Master Rod Bearing Inspection Chart (Sheet 2 of 4)

Physical Condition	Cause	Action
E. BURNISHED PLATING.		
Brightly polished bands running in the direction of travel of the part, usually accompanied by light scoring.	Momentary lack of lubrication.	Accept bearings which have the ID plating lightly burnished, as long as the silver plate is not exposed. See view E, which shows the plating burnished in two bands. Do not confuse burnishing with worn plating. Reject bearings in which the silver plate has been exposed, as such burnishing usually results in irreparable damage to the silver.
F. OIL EROSION.		
Areas of surface plating removed in varying degrees of severity.	Areas of plating worn away by mechanical means	a. Accept bearings having small spots where the lead-tin plate has been eroded by the oil as shown in view F, location 1. Return bearings having large spots or groups of spots as shown in view F, locations 2 and 3, to the applicable ASO for re-plating.

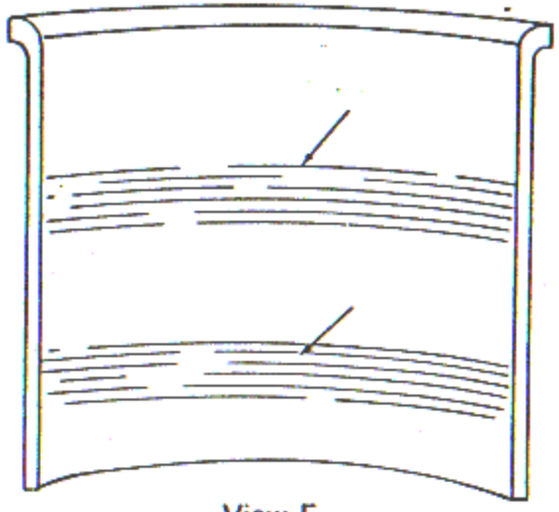

View E

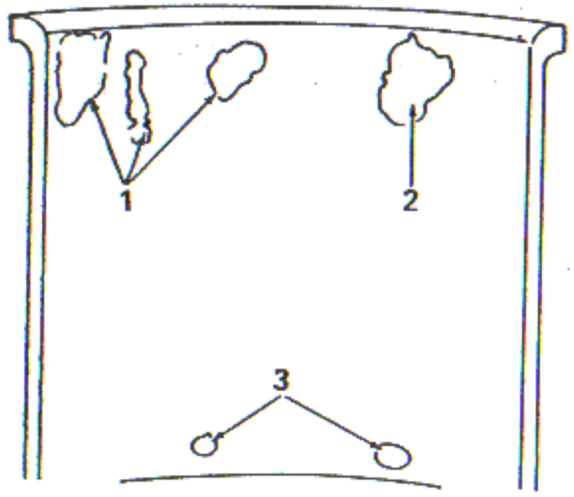

View F

Figure 6-9. Master Rod Bearing Inspection Chart (Sheet 3 of 4)

Physical Condition	Cause	Action
F. OIL EROSION (Continued)		b. Views G, H and I illustrate different types of erosion patterns on the ID of the master rod bearing. Bearings showing less erosion than depicted in these views are acceptable providing the erosion of the silver plate is not through to the steel shell. Bearings beyond these limits are to be discarded.

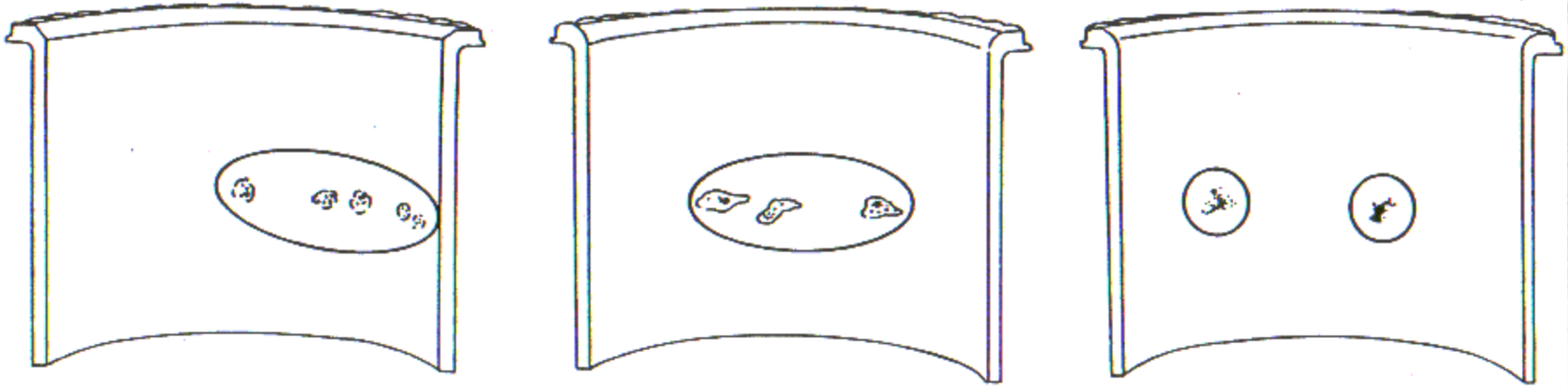

View G View H View I

Figure 6-9. Master Rod Bearing Inspection Chart (Sheet 4 of 4)

a. In addition measure the ID of the bearing in the center and in two planes 90 degrees apart.

b. Bearings out-of-round 0.0025 inch or more on the OD or ID are to be rejected.

c. Inspection of bearings may reveal a varying amount of black film on the ID. This film is hard and resistant to scratching and will not cause engine malfunctioning.

6-94. MASTER ROD PISTON PIN BUSHING. Check the piston pin bushing in the master rod for wear with maximum wear gage.

6-95. MASTER ROD KNUCKLE PIN HOLES. Inspect knuckle pin holes for pitting, scoring and wear. Recondition as necessary in accordance with paragraph 6-383.

6-96. MASTER CONNECTING ROD SPACER INSPECTION. Previously used spacers shall be examined under the following criteria after the lead-tin plating has been stripped.

SILVER PLATING (LA)

a. Spacers shall meet all requirements of the Curtiss-Wright Drawing 117547 with the exceptions and ramifications noted below.

b. Wear on the "J" dimension of the part is permissible up to 0.005 inch beyond the maximum I.D. specified. The wear must be even around the circumference of the I.D., preserving its circularity. Any silver extruded from the I.D. and forming a lip at the edge shall be removed and the break-edge reestablished. Nicks, chipping, or cracks are not acceptable.

c. Wear on the "H" dimension is permissable provided that the remaining silver plate thickness is at least 0.004 inch on each side of the web and the spherical radii on both sides of the 36 web holes are still in evidence. Web plating shall be smooth, free of nicks, chipping, and cracks. Wear steps/ridges shall be blended smoothly to the level of adjacent plating.

d. Pitting of the steel base metal which is visible with a five power glass is cause for scrapping the part. Nicks deeper than 0.005 inch or cracks are not acceptable.

e. Spacers meeting the criteria above shall have lead-tin plating applied to 0.0004 - 0.0006 thickness in accordance with paragraph 6-688 and are thereafter suitable for engine installation.

6-97. ARTICULATED ROD INSPECTION. (See tool groups 77 and 97.)

6-97A. GENERAL. Inspect the articulated rods for nicks and dents. Nicks and dents are not acceptable and blending is not permitted.

NOTE

Slight indentations produced by "Rockwell" hardness test operation are not cause for rejection. No rework of any kind is required on rods having such indications.

6-98. ARTICULATED ROD HORIZONTAL AND VERTICAL ALIGNMENT. Check the horizontal and vertical alignment of articulated rods in same manner described for the master rod, using the same tooling and limits. Refer to paragraphs 6-89 and 6-90.

6-99. ARTICULATED ROD PISTON PIN AND KNUCKLE PIN BUSHINGS.

a. Check piston pin bushings in the articulated rods with wear gage. Check the knuckle pin bushings with maximum wear gage. The wear gage must not enter straight portion of bore at any radial portion.

b. Articulated rod assemblies are considered satisfactory for continued service without replacement of bushings provided the out-of-roundness does not exceed 0.002 inch.

c. Surface condition and rod alignment must meet the requirements of paragraphs 6-97 and 6-98. The table of limits fit between the knuckle pin and bushing and/or the piston pin and bushing must be met.

6-100. KNUCKLE PIN SPLINED LOCKING PLATE. End wear on the tips of the inner diameter splines of the knuckle pin splined locking plate is permissible to a maximum of 0.020 inch.

6-101. CYLINDER INSPECTION. (See tool groups 32, 33 and 123.)

6-102. CYLINDER DISPOSITION IN THE EVENT OF LOOSE OR BROKEN CAP SCREWS. If at any time after engine operation one or more

cylinder hold-down cap screws on any one cylinder are found broken or loose to the extent that the cap screws are giving no support to the cylinder, make the following inspections and/or repair. If one or a maximum of two cap screws are found to be loose or broken on any one cylinder, check the torque of adjacent cap screws. If the minimum required torque value specified in table 9-14 is found, remove the cylinder and inspect as follows:

a. Check the barrel flange for flatness. It must be flat within 0.003 inch full indicator reading. It must also be square with the barrel ID and OD within 0.003 inch full indicator reading. Cylinders which do not satisfy these requirements must be lapped to be flat and square within 0.002 inch before the cylinder may be returned to service. Lap the flange as directed in paragraph 6-412.

b. Perform a magnetic particle inspection to ensure that there are no cracks in the barrel or flange.

c. If the cylinder conforms to the limits specified, it may be returned to service.

d. Discard all cap screws used with that cylinder.

e. If the torque value of the adjacent cap screws is below the minimum value, or the flange is beyond the 0.003 inch limit, or more than two cap screws are loose or broken on any one cylinder, the cylinder must be rebarreled and completely reconditioned before being returned to service.

6-102A. CYLINDER FLANGE FACE. Check the cylinder flange face at each overhaul. It must be flat within 0.002 inch full indicator reading. A surface finish of 60 microinches rms or better is required. If rework is required, refer to paragraph 6-414.

6-103. CYLINDER BARREL INSPECTION. Cylinder barrels are very highly stressed. They are prone to malfunction if cracks are not detected and properly dealt with during overhaul. Ring scuffing and metal pick-up often causes invisible cracks in the nitrided surface on the barrel ID. Cracks in the nitrided areas sometimes result from staking the barrel fins.

a. Unless previously rejected, all cylinder barrels are to be magnetic particle inspected during each overhaul in accordance with paragraph 6-43.

CAUTION

If any barrel reconditioning is performed after the magnetic particle inspection has been accomplished, the barrel must be magnetic particle inspected again.

b. Cylinder barrel skirt edges that are dented or exhibit minute surface cracks may be reconditioned in accordance with the instructions in paragraph 6-94.

c. Cylinder barrel hold-down flanges which are found to contain cracks on the bottom side which extend radially outward from the cap screw holes toward or to the flange OD may be reconditioned according to instructions in paragraph 6-413.

d. Examine the underside of cylinder barrel hold-down flanges for galling or other surface imperfections, and for flatness using a suitable flat disc and a 0.001 inch feeler gage or equivalent. If the flange surface is found true within 0.001 inch and is otherwise satisfactory, rework of the flange face is not required. If unsatisfactory, flange faces may be reworked in accordance with instructions in paragraph 6-414.

e. Inspect cylinder bores for wear, out-of-round, taper and choke in accordance with paragraph 6-104.

6-104. CYLINDER BORE WEAR, OUT-OF-ROUND, TAPER AND CHOKE LIMITS.

a. Place cylinder bore measuring gage in the master ring gage, as shown in figure 6-10. Adjust the measuring finger.

b. Take a fore and aft measurement of the cylinder barrel near the bottom. Be sure the contact points of the gage are in a plane parallel to the cylinder hold-down flange. Record the reading.

c. Move the gage straight into the barrel to a point just below the choke, approximately 2-1/4 inches from the top. Record this reading.

d. Turn the gage 90 degrees and measure again at the bottom and below the choke. Record the readings.

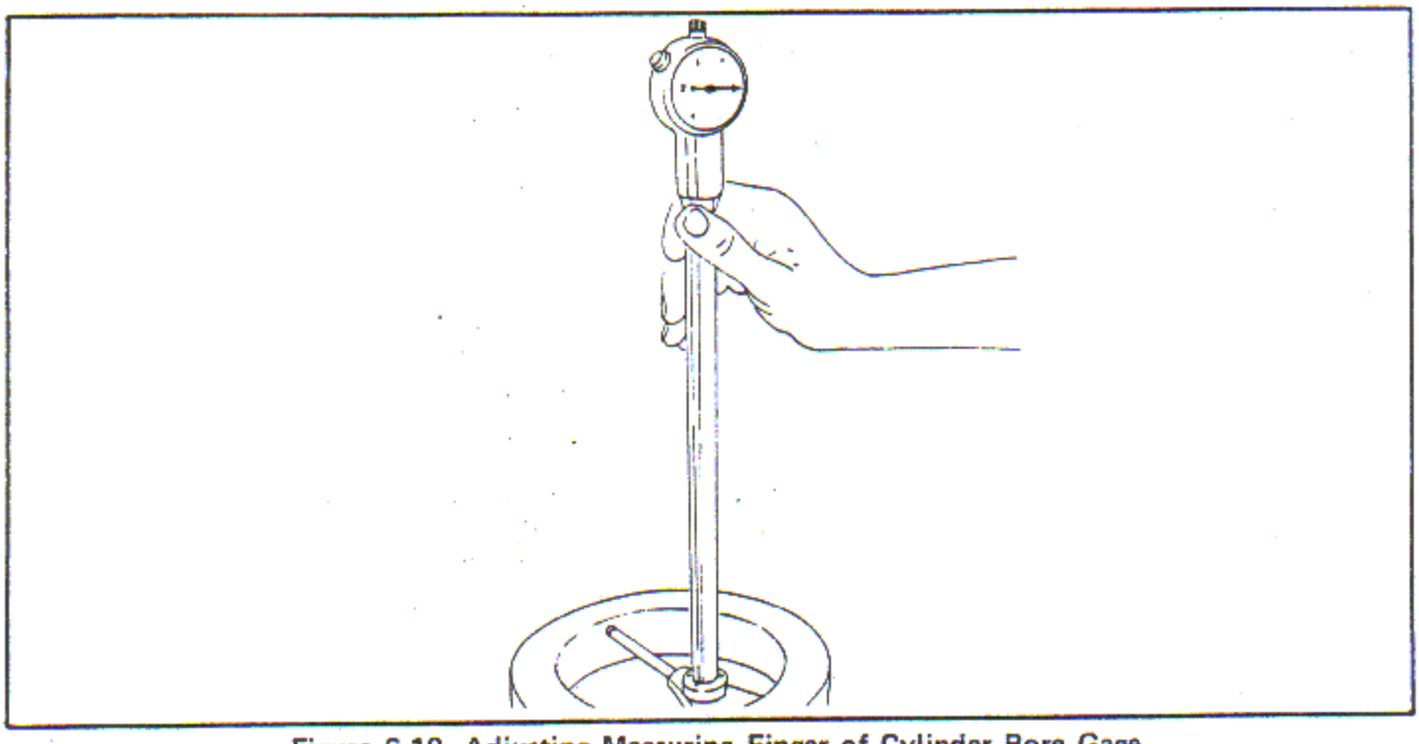

Figure 6-10. Adjusting Measuring Finger of Cylinder Bore Gage

e. The difference between the two diameters on the same plane is the out-of-round at that point in the cylinder. The cylinder minimum size will be found near the bottom due to very little wear here and this can be considered the original size. Any measurement above this size is considered wear. The difference in diameter between top and bottom is the taper. Refer to reference 235 in Table of Limits, Section IX.

f. The choke diameter must be a least 0.005 inch smaller than the straight portion of the bore.

g. Measure the diameter of the choke at a point 0.250 inch down from the top of the barrel ID. The choke diameter starts approximately 2.00 - 3.00 inches down from the top of the bore. This diameter must continuously decrease without any increase as the bore gage is moved toward the top of the bore. The diametrical difference between the straight portion of the barrel diameter and the choke diameter shall not be less than 0.005 inch. See figure 6-11.

h. Cylinders which exceed these limits are unfit for further service.

6-105. CYLINDER BARREL PITTING LIMITS. The following limits apply only to cylinders that have passed through all applicable reconditioning operations. Pits need not be measured, merely estimated by an experienced inspector, utilizing no visual aid.

a. Disregard porosity or pores less than 0.010 inch in diameter.

b. Reject crescent or ring-shaped pits as their centers may flake out. Rounded pits without rough edges or tails are acceptable.

c. Reject pits larger than 0.010 inch in diameter or 0.005 inch in depth.

d. Reject pits where the minimum separation between two pits is less than twice the diameter of the larger pit or 0.060 inch, whichever is less. No overlapping pits are permissible.

e. Pits in the area of ring travel are not permissible.

f. No more than 10 pits are permissible in the nonworking area of the barrel beyond the ring travel boundary.

NOTE

Cylinders which cannot meet the above limits after honing within existing dimensional limits are unfit for further service.

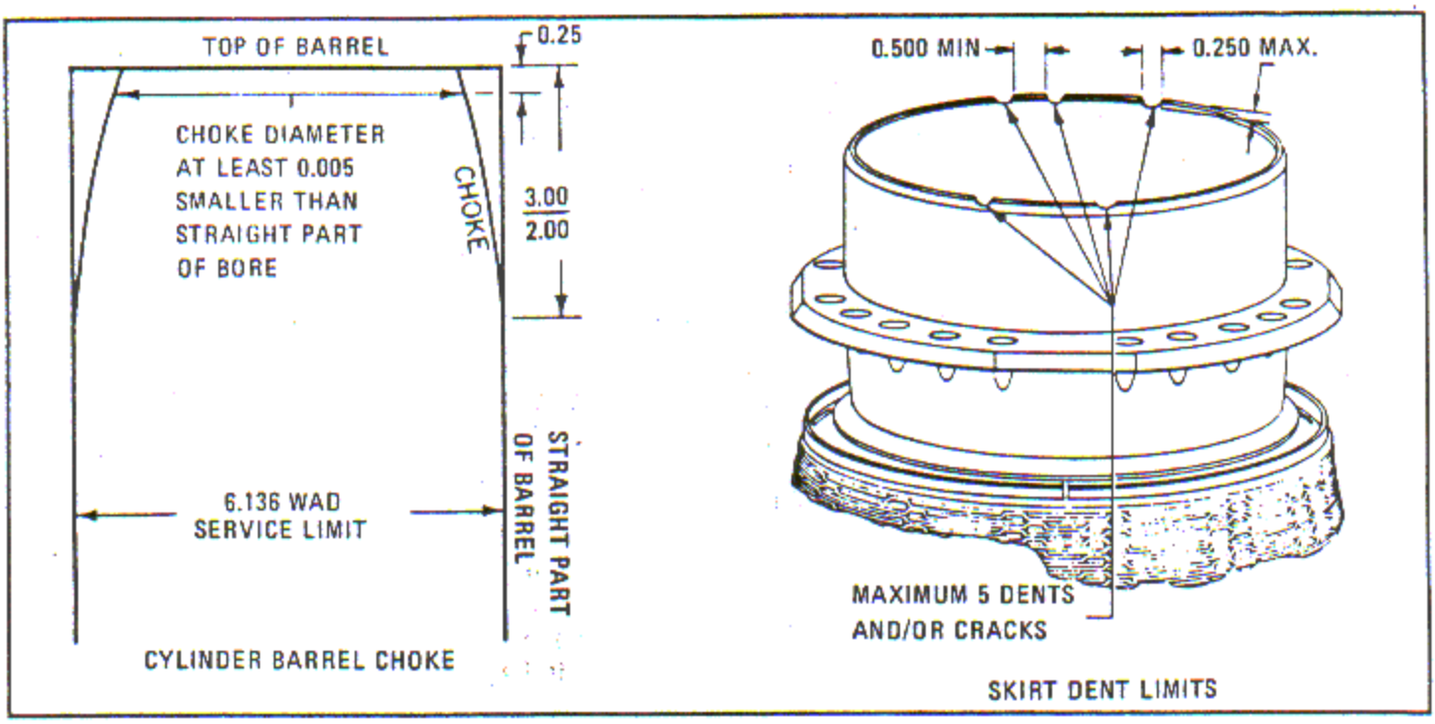

Figure 6-11. Cylinder Barrel Choke and Cylinder Barrel Skirt Dent Limits

6-106. CYLINDER BARREL SKIRT DENT LIMITS. Cylinder barrels that are dented or exhibit minute surface cracks at the base of the skirt on the circumferential edge, may be salvaged if the cracks and/or dents total no more than five and are at least 0.500 inch apart. The longitudinal depth and width of the cracks or dents are dependent on the reconditioning limits.

a. Recondition by locally blending the affected areas. Blending should be smooth and continuous with no sharp edges.

b. After reconditioning, the affected areas shall not exceed a longitudinal depth of 0.125 inch and a width of 0.250 inch. See figure 6-11.

NOTE

No straightening is permissible on bent barrel skirts.

6-107. CYLINDER BORE INSPECTION FOR CONTAMINANTS. This instruction is provided to establish an effective control on cylinder barrel cleanliness by measuring the amount of residual contamination on the barrel wall. This procedure is recommended as a periodic check on the efficiency of the cylinder barrel cleaning procedures and equipment.

a. Select a cylinder at random which has been completely overhauled, cleaned and ready for installation.

b. Hold the cylinder at an oblique angle with the base in a clean, white enamel 8 x 10 inches or larger photographic tray. Wash down the cylinder bore with light petroleum naphtha, Military Specification MIL-N-O-C-141, starting at the upper end of the bore and working downwards.

NOTE

Scrub the area being washed with a neoprene scraper to dislodge adhering solids.

c. Continue to wash downward until the entire cylinder bore has been cleaned. At the completion of the washing, all the deposit is in the tray with a large quantity of solvent.

WARNING

Observe the proper safety precautions to protect personnel from the vapor being released.

d. Reduce the amount of solvent by evaporation on a steam or hot plate. As evaporation proceeds,

agitate the tray by rocking and continue washing with the solvent to move the deposit into one corner of the tray.

e. Reduce the volume to 3 - 5 mililiters by evaporation and transfer it to a weighed centrifuge tube (a small glass funnel may be required for this operation). Wash the tray and catch the washings in the centrifuge tube.

f. Centrifuge until all solids are precipitated. Remove the liquid in the tube with a syringe or vacuum bottle. Add fresh solvent and stir vigorously.

g. Repeat the washing and centrifuging a minimum of three to four times until the oily components have been washed out.

h. After final centrifuging and syphoning, place the tube in a drying oven, or sand bath on a hot plate and evaporate to dryness.

NOTE

If the solids appear oily and not powdery, repeat the washings with more solvent.

i. Weigh the dry centrifuge tube with the deposit and calculate the weight of the deposit. A maximum residual dry weight of 10 milligrams is acceptable, however, deposits weighing less are obtainable and should be strived for.

6-108. CYLINDER HEAD INSPECTION. Caustic etch inspect the outside of cylinder heads in areas around spark plug inserts, around intake pipe connector cap screw bushing holes, and any other areas where cracks are suspected.

a. Rub the area with a 10 - 20 per cent caustic soda solution for about 10 minutes. This is to remove aluminum oxides and to work the solution into the cracks (if any exist).

b. Swab the area with a 35 - 65 per cent solution of nitric acid. This will brighten the surface and reveal any cracks as dark lines.

c. Reject all cylinder heads which are cracked in the dome. Fins can be profiled if the cracks do not extend into the dome. If dome crack is confined to the area adjacent to the spark plug boss, the head may be salvaged in accordance with paragraph 6-730B.

d. Wash the etched surfaces thoroughly with hot water to remove all traces of soda and acid solutions.

6-109. Cylinder Head Combustion Chamber Inspection. Nicks, dents and pits on the combustion chamber surface of cylinder heads may be blended out. The following limits shall be observed:

a. There shall be no sharp edges or corners.

b. The maximum depth of the surface irregularity or subsequent rework is .020 inches.

c. The maximum amount of reworked area permissible is 10 per cent of the cylinder head combustion area surface.

6-110. Fluorescent Inspection. Fluorescent penetrant inspection of cylinder heads is satisfactory substitute for the caustic etch method.

6-111. Spark Plug Inserts. Check all inserts for installation integrity.

a. Install torque checking tool into each insert from inside the cylinder.

b. Attempt to wiggle the insert.

c. Without scratching the boss, mark the position of the insert in the cylinder. Apply 1800 inch-lbs of torque in the loosening direction and check for insert movement.

d. If the insert wiggles or moves it shall be replaced in accordance with paragraph 6-428.

e. Clean the threads using the C-W-C thread chaser.

6-112. CYLINDER FINS. Check all fins for air blocks, bends, cracks and other defects.

a. Remove obstructions from between fins using a small probe or an air hose.

b. Reject any cylinder head with a fin crack which extends into the base material (dome). When a crack is confined to a fin, rework is not necessary to remove it. However, the limits established in paragraph 6-451 for maximum fin removal must be observed and shall be interpreted to include cracked as well as removed fins.

c. Replace missing or damaged barrel fins in accordance with paragraph 6-444.

d. Replace fin silastic braces, as necessary, in accordance with paragraph 6-459.

6-113. INTAKE PIPE TO CYLINDER ATTACHING FLANGE BOLT HOLES HELICOIL INSERT INSPECTION. On cylinders returning from service, if the end of the subject helicoil is more than three threads below the surface, replace the helicoil. New helicoil inserts shall be installed to a depth of one and one-half to two threads below the flange mating surface.

6-114. EXHAUST PIPE CONNECTION. Connections are serviceable with the following limits:

a. Remove attaching screws. With 250 ft-lbs of torque applied to the connection it should not move in the cylinder.

b. Using a micrometer or a gage measure the diameter of the bead. The minimum acceptable diameter is 3.020 inches.

c. Inspect visually the convex surfaces of the bead for areas worn to the extent that the contour of the surface is distorted. The largest linear dimension of any such area shall not exceed 0.25 inch nor shall the total of the largest linear dimensions of all such areas exceed 0.50 inch.

d. Place exhaust pipe connection gage, over stack end of connection and butted against the bead as shown in figure 6-12. The OD of the connection must be small enough to allow positioning of the gage. The minimum gap between the end of the gage and the lip on the bead is 0.010 inch. Perform this check utilizing both ends of the gage.

6-115. EXHAUST CONNECTION CLAMP ASSEMBLY INSPECTION. (See tool group 32.)

a. Inspect all exhaust pipe clamps for proper boss length prior to use.

b. Insert a 0.340 inch shim in the split line gap and measure the dimension from one boss end face to the other (i.e., from bolt head seating surface to nut seating surface). Distance between end faces should be 1.790 - 1.850 inches.

c. Reject clamps that are not within this limit.

d. Place exhaust pipe connection gage over stack end of connection and butted against the bead as shown in figure 6-12. The OD of the connection must be small enough to allow positioning of the gage. The minimum gap between the end of the gage and the lip on the bead is 0.010 inch. Perform this check utilizing both ends of the gage.

6-116. PISTON INSPECTION.

6-116A. TIME CODING ON USED PISTONS. Heavyweight pistons (P/N's 149453, 149486 and subsequent) shall be time coded at each overhaul. Steel stamp the number, in 1/8 inch characters, corresponding to the nearest number of hours (in hundreds) of service. For example: if service time is 151 to 250 hours, the code is 2; if service time is 251 to 350 hours, the code is 3; etc. No code is required if the service time is less than 50 hours. Stamp the code on the piston pin plug side of the pin boss no closer than 1/4 inch to the piston pin bore.

a. Normally, the service time accumulated by a piston during the last service tour of an engine will be the same as the time since overhaul (TSO) of the engine from which it was removed. However, if a cylinder and piston assembly was replaced during the engine service tour, the service time accumulated by the replacement piston shall be the current TSO of the engine minus the TSO at the time of piston replacement.

6-117. REUSE OF PISTONS.

a. Lightweight pistons shall be scrapped.

b. All pistons coded with an asterisk shall be scrapped.

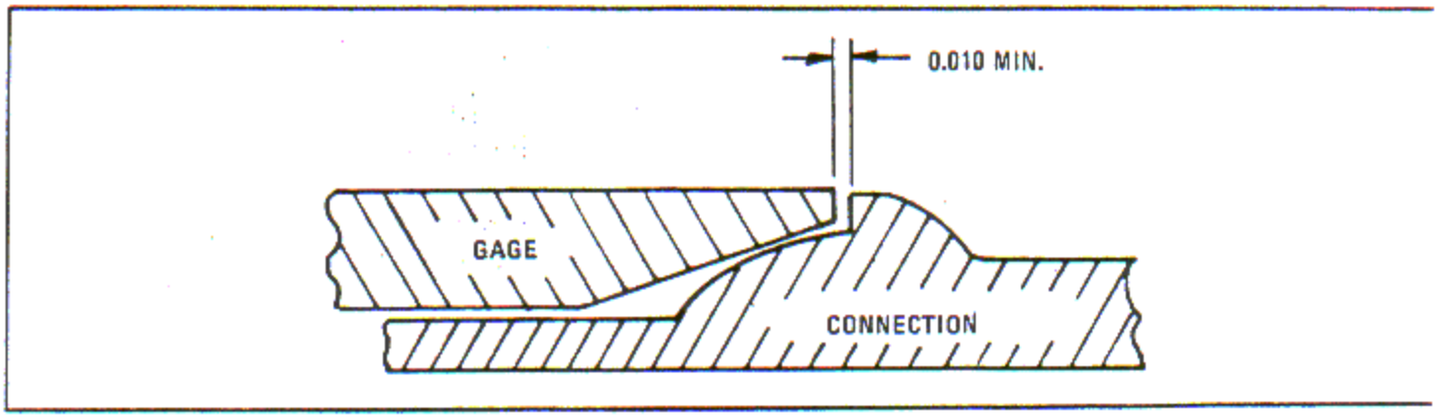

Figure 6-12. Exhaust Pipe Connection Limits

c. If it is not possible to determine previous service of a piston, the piston shall be scrapped.

d. An X coding shall be interpreted as 500 hours of previous service time.

e. Upper pistons shall not be reinstalled after accumulating more than 1,000 hours of service time.

f. Lower pistons shall not be reinstalled after accumulating more than 750 hours of service time.

6-118. CLEAN PISTONS FOR FLUORESCENT PENETRANT INSPECTION.

a. Vapor degrease the pistons as instructed in Section V.

b. Soak the pistons in a suitable carbon strip to loosen hard carbon deposits. Remove soil and hardened carbon by soft grit blasting. Refer to paragraph 5-24.

c. Vapor degrease the pistons.

d. Rinse the pistons thoroughly in cold running water and immediately, while the pistons are still wet, remove any remaining smut by brushing with a suitable soft bristle brush.

e. Rinse the pistons in hot water and blow dry with an air blast. The pistons are now ready for fluorescent penetrant inspection.

6-119. FLUORESCENT PENETRANT INSPECT PISTONS. Inspect the cleaned pistons for cracks by the Post-Emulsification Fluorescent Penetrant (Pentrex) Method described in paragraph 6-54. Pay close attention to the following areas.

a. Around piston pin bosses.

b. In the wedge shaped (compression ring) grooves.

c. Underside of dome.

d. Piston pin bore.

e. Lip on skirt ID perpendicular to piston pin boss.

NOTE

Pentrex is a very sensitive method of inspection which will indicate all cracks; however, Pentrex will also pick up indications caused by porosity, nicks, pits and other superficial surface defects. With experience, an inspector can differentiate crack indications from false indications.

f. After pentrant inspection vapor degrease the pistons.

6-120. INSPECT PISTON FOR WEAR AND GENERAL CONDITION. (See tool group 95.)

a. Inspect pistons having conically bored piston pin holes using gage. Conduct this inspection by

inserting the gage into the piston pin bore through the piston pin bosses.

b. Inspect the wedge grooves in the piston to determine if they should be reconditioned.

NOTE

The No. 1 ring groove (wedge shape, top groove) must be reconditioned (regrooved) if close visual inspection reveals that the nickel plate has been worn through.

c. Check the number one ring groove with maximum wear snap gage to determine whether there is sufficient stock for regrooving. If the gage passes through the groove, the piston is no longer serviceable.

d. Check groove number two with maximum wear snap gage. If the gage passes through the groove, the piston is no longer serviceable. If the piston is satisfactory for regrooving of the number two ring groove, place a new piston ring in the groove. Run a 0.004 inch thick flat feeler gage around the piston between the ring and the groove. If at any point the feeler gage becomes loose while the piston ring is bottomed on the tapered sides, the groove shall be reconditioned. Perform the feeler check on both sides, top and bottom, of the ring. Remove the ring. Refer to paragraph 6-556 for reconditioning procedure.

e. Recondition all pistons having a wear step in the top or bottom of any groove.

f. Clean pitted grooves sufficiently to ensure the proper angle for the depth of the groove.

g. Pistons displaying evidence of physical damage such as dents and nicks, especially in those areas listed in paragraph 6-119, shall be rejected.

h. Slight piston wear is permissable. However, the minimum O. D. just above the top ring groove shall be no less than 6.075 inches. There shall be no evidence of skirt scuffing.

NOTE

If pitting remains after the correct angle has been cut, it need not be removed.

6-121. Inspect Pistons for Pitting Due to Corrosion. Rounded pits without rough edges are acceptable provided they do not exceed the limits given. Rough pits may be smoothed. The minimum separation between any two pits must be at least two times the diameter of the largest pit. Limits are as follows:

a. Dome - Pits must not exceed 0.062 inch in diameter by 0.025 inch deep.

b. Ring Land Area - Maximum pit diameter of 0.030 inch by 0.015 inch deep.

c. Skirt - Maximum pit diameter of 0.025 inch by 0.010 inch deep. No pits allowed in the piston pin mating diameter.

6-122. PISTON PIN AND PLUG INSPECTION.

a. Piston pin deflection inspection: Place the piston pin (2, figure 6-13) on two "V" blocks (3). Set a dial indicator gage (1) equidistant between the end of the piston pin and grooved section at the opposite end. Rotate the piston pin. Maximum allowable run-out shall not exceed 0.002 inch full indicator reading.

b. Piston pin and piston pin plug: Inspect the piston pin ID for wear at the piston pin plug location to ensure the fit of piston pin plug to piston pin, as specified in reference 237, Table of Limits, Section IX. New piston pin plugs may be copper plated a maximum thickness of 0.001 inch. Refer to paragraph 6-881 for the copper plating procedure.

CAUTION

Do not attempt to salvage worn piston pin plugs by copper plating.

c. Examine the piston pin inside diameter for taper at the piston pin plug location. Reject pins for posible rework if the taper exceeds 0.0005 inch.

6-122A. ROCKER BOX COVER INSPECTION.

6-122B. GENERAL. Check the rocker box cover mating surface flatness with a 0.0015 inch feeler gage on a flat surface. If mating surface is not flat within 0.0015 inch, recondition as instructed in paragraph 6-504.

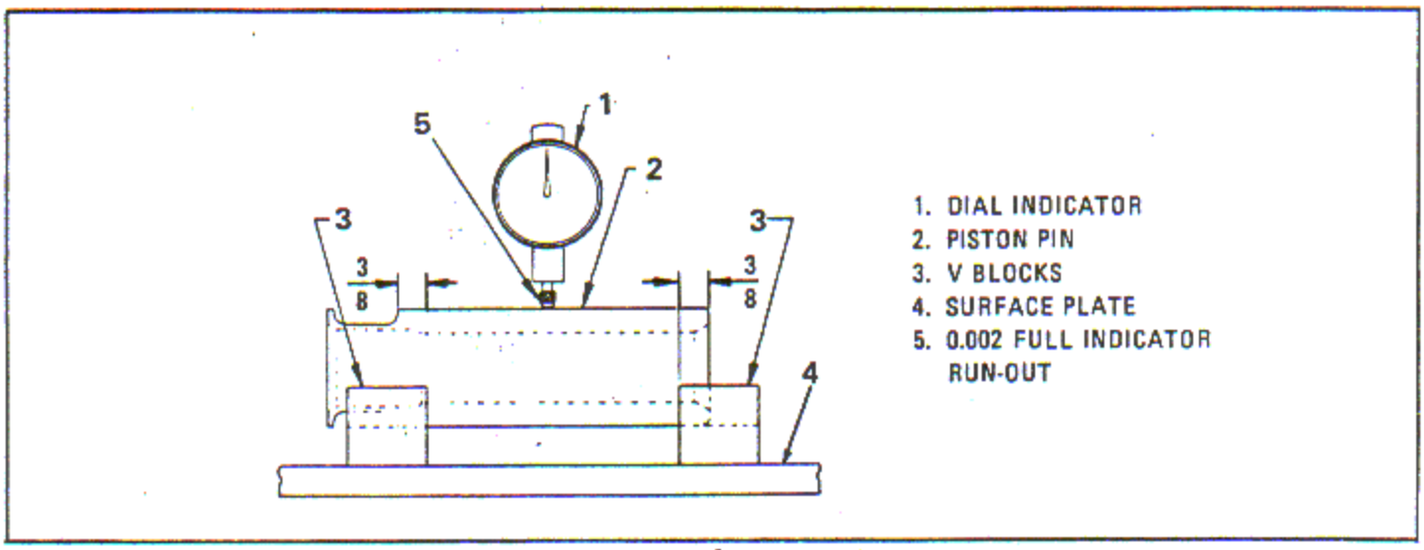

Figure 6-13. Piston Pin Deflection Test

6-123. ROCKER ARM ASSEMBLIES.

6-124. CHECK SIDE CLEARANCE.

a. Check the side clearance between the rocker arm fork and the rocker arm roller hub using a 0.0015 inch feeler gage. The feeler gage shall not enter an area greater than one-quarter the circumference of the hub.

b. Measure the clearance between the rocker arm roller and the rocker arm roller hub, using a dial indicator mounted in line with the valve travel. Maximum clearance is 0.010 inch.

c. Rocker arm assemblies which exceed the above limits, may be salvaged as instructed in paragraph 6-531.

6-125. ROCKER ARM AND ROCKER BOX INTERFERENCE. Interference may occur between the rocker arm and rocker box on cylinder assemblies incorporating the provisions of Power Plant Change No. 4, due to the accumulation of manufacturing tolerances. Inspect the cylinder assemblies and correct the condition when it is found in accordance with the following paragraph.

6-126. Inspection Procedure.

a. Inspect applicable cylinder assembly rocker boxes with rocker arms installed to ensure no interference exists between the adjusting screw end of the rocker arm and the rear end of the rocker boxes. As an alternate, tooling which provides equivalent results may be used for this purpose.

b. If interference is found, remove sufficient material from the rocker box by hand grinding or equivalent, to ensure approximately 0.010 inch clearance between the rocker box and the rocker arm assembly. Touch up reworked areas in accordance with standard practice.

6-127. Rocker Arm Assemblies Hub Face Wear.

a. Determine the maximum and minimum dimensions between the hub faces of the rocker arm. The minimum dimension will occur at the point of maximum wear.

b. The difference between the maximum and the minimum dimensions shall not exceed 0.010 inch.

c. The minimum acceptable dimension between hub faces is 1.155 inch.

d. Rocker arm hub face surface finish of ten microinches rms or better is required.

6-128. Rocker Arm Hub Bolt Bushings. Inspect the rocker arm hub bolt bushings in the rocker boxes for wear using flat plug gage, group 118. Insert the gage into each bushing on two planes 90 degrees apart. If the bushings are worn beyond the maximum wear limit of the gage, replace the bushings. Refer to paragraph 6-509.

6-129. Rocker Arm Hub Bolt Inspection.

a. Nital etch inspect disassembled rocker arm hub bolts in accordance with paragraph 6-25 to detect burns on the bolt shank. Burns will show as darkened areas. In severe cases, the center of the darkened area will take on a lighter color. Disregard pin point white flecks and burns on the hex head.

b. Reject and scrap bolts with irregular area burns measuring 0.020 inch or more in diameter or length.

c. Vibro-etch the number 27 in characters 3/16 - 1/4 inch high on the head of used bolts after inspection. Identify inspected new bolts by vibro-etching 27X in characters 3/16 - 1/4 inch high on the bolt head.

NOTE

New rolled thread bolts do not require Nital etch inspection.

6-130. ROCKER ARM BEARING. Inspect rocker arm bearings at every overhaul as follows:

a. Visually inspect the bearing for evidence of overheating and /or heavy contact of the outer race on the side facing the rocker box. Reject all bearings showing these discrepancies.

NOTE

Overheating discoloration should not be confused with oil varnishing which is a normal condition

b. Ensure that the bearing has been properly cleaned and then check the bearing for end movement (total). Reject bearings found to have end movement which exceeds a maximum of 0.001 inch over the blueprint dimensions listed below:

Bearing Part Number	Total End Movement
SKF 129943	0.007 - 0.0105
Timken 134898	0.006 - 0.008

c. Apply a load on the thrust side of the inner race. Check the bearing for roughness and reject any bearing showing such a condition.

NOTE

The thrust side is the side where the flange or circlet is located on the outer race.

6-131. VALVE INSPECTION.

6-132. VALVE NOMENCLATURE. See figure 6-14 for the designated areas of the valve as outlined in the following text.

a. Valve tip: The tip is the area from the top of the valve to the top of the lock groove.

b. Lock groove: The grooved area in which the valve locks are located.

c. Stem: The area from the bottom of the lock groove to the area of the combustion chamber end of the guide when the valve is closed.

d. Neck: The area from the end of the guide when the valve is closed to the beginning of the radius of the head.

e. Throat: The area from the beginning of the radius of the head to the end of this radius.

f. Underhead: The area from the end of the throat radius to the edge of the face.

g. Face: The angular surface is ground to seal against the face of the seat. Intake valve faces are stellite. Exhaust valve faces are nichrome.

h. Dome: The area on the bottom of the head which is exposed to the combustion chamber when the valve is closed.

i. Head: The entire bottom of the valve from the junction of the neck and throat. The neck is not part of the head.

j. Head OD: The area which is the largest outside diameter in the head.

k. Cavity ID: The largest diameter of the cavity walls.

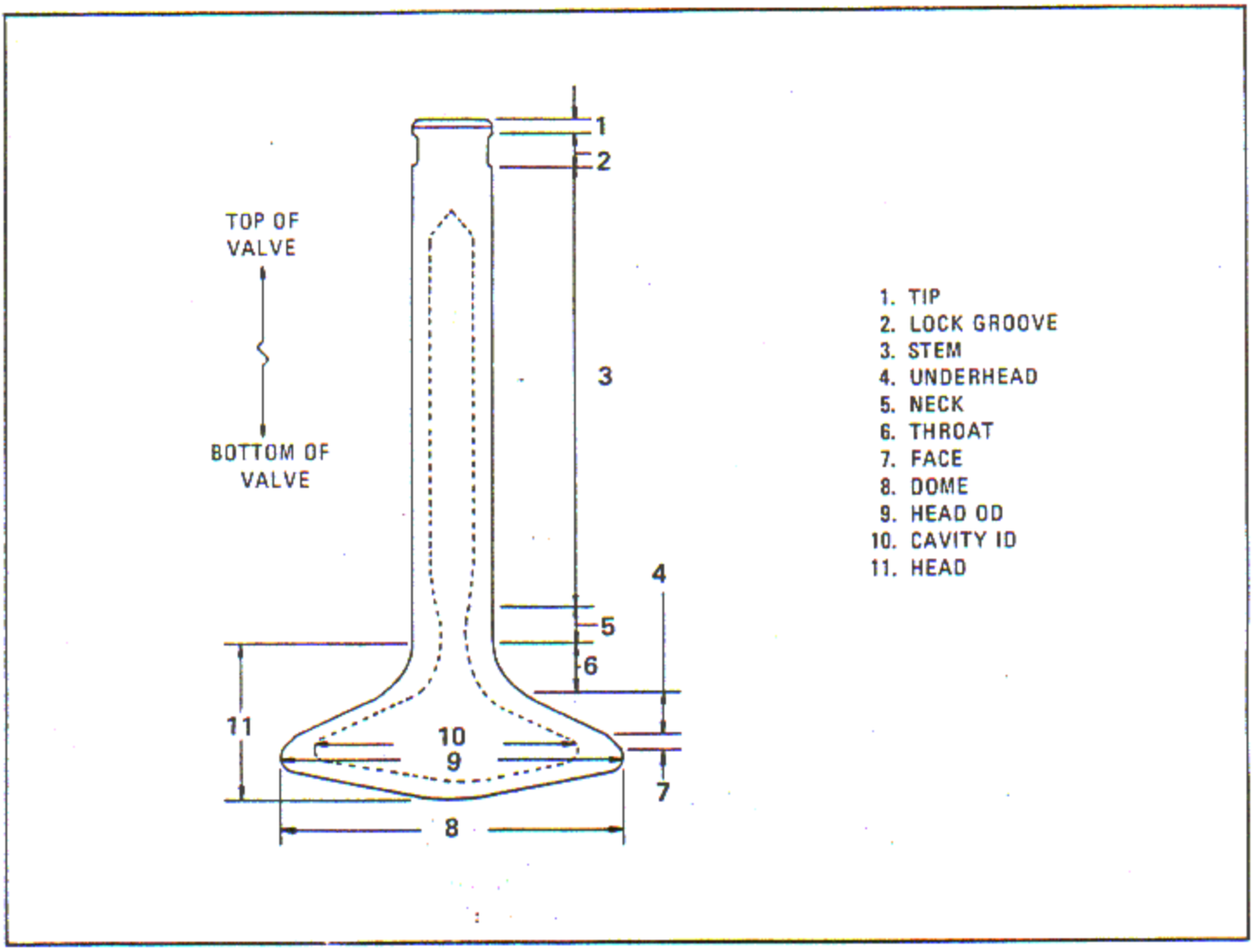

Figure 6-14. Designated Valve Areas

6-133. GENERAL INSPECTION OF VALVES. (See tool groups 43 and 73.)

6-133A. Inspect valves for surface condition and wear.

WARNING

Intake and exhaust valves are partially filled with sodium which is highly combustible in the presence of water. Dispose of rejected valves in such a manner that they will never be broken open to endanger lives or property.

a. Reject all valves with cracked, collapsed, or eroded domes, or with gutter and/or cracked faces (unless the face cracks are fine enough to be removed by grinding).

b. Figures 6-15 through 6-19 illustrate some of the various surface conditions found on service valves.

c. Stem pitting, figure 6-15: Small indentures caused by particles of metal breaking out due to corrosion or erosion. Accept valves with stems pitted as shown. Polish the stem lightly to remove sharp edges.

d. Stem spalling, figure 6-15: Surface metal separates in thin layers (nitrided stems) due to corrosive attack after engine shutdown. Accept valve stems having a maximum of two spalled areas, each area not exceeding 1/4 inch square

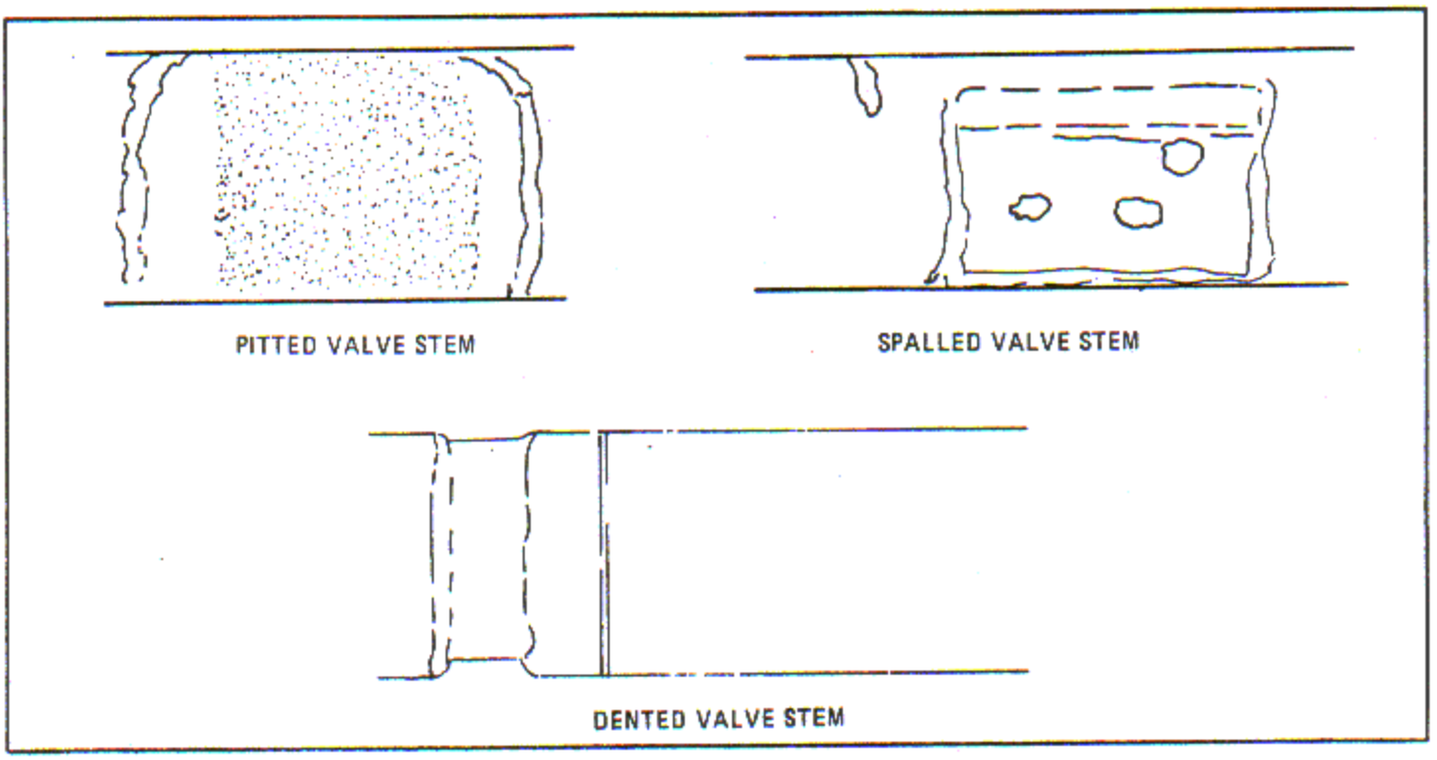

Figure 6-15. Inspection of Valve Stem

for exhaust valves, and 1/8 inch square for intake valves, and having a minimum distance of 1/4 inch between the spalled areas. Polish the stems lightly to remove sharp edges.

e. Stem dents and nicks, figure 6-15: Depression of surface metal without removal of material, but usually with abrupt change in surface. Most nicking and denting occurs during engine disassembly and parts handling. The valve stem shown was damaged by improper removal of the valve spring upper washer. Valves having stems which are not nitrided may be stoned to remove sharp edges. Refer to paragraph 6-134 for inspection of nitrided intake valves.

f. Dome nicks and dents: Nicks and dents up to 0.030 inch deep and 0.250 inch in diameter are permissible on valve domes. If more than one nick or dent exists, the total area covered shall not exceed 0.250 square inch.

g. Dome pitting, figure 6-16. Small indentures caused by particles of metal breaking out due to corrosion or erosion. Accept valves with dome pits to corrosion or erosion. Accept valves with dome pits as shown. Do not attempt to polish out the pits.

h. Dome nichrome coat cracking, figure 6-16: Excessive heat causes the dome nichrome coating to crack. Reject any valves with cracks in the dome coating.

i. Gas pockets in dome, figure 6-16: A gas pocket, as shown, is the result of a sub-surface gas hole which developed during the application of the dome coating. They may be found on new valves. A gas pocket does not warrant replacement of the valve unless the size of the individual pocket exceeds 0.060 inch in diameter or there are more than 10 pockets. Two adjacent pockets in the dome area, closer together than 0.060 inch, are sufficient cause for rejection. Five pockets of this type are permitted in the 0.250 inch area adjacent to the periphery of the valve dome. No pockets are permitted on the valve face.

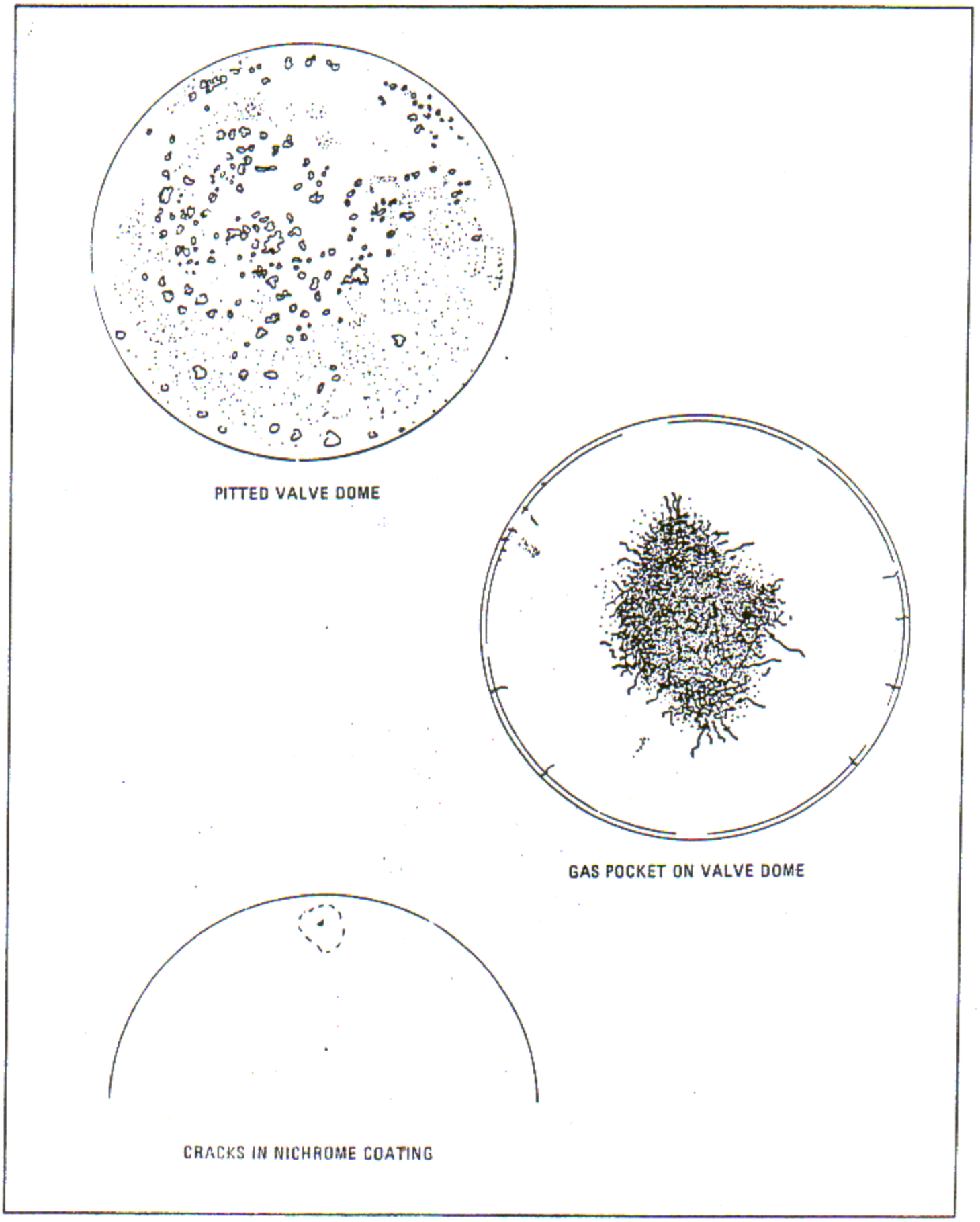

Figure 6-16. Inspection of Valve Dome

j. Dome periphery pitting, figure 6-17: Small indentures caused by erosion or corrosion. Unless the pitting is very severe, the condition shown in view A can be remedied by grinding down the dome periphery. Small pits that remain, after grinding, as shown in view B, are acceptable. The ground surface must be carefully blended into the valve dome and face.

k. Valve face pounding, figure 6-17: High velocity seating because of excessive valve lash causes metal displacement forming a lip around the face of the valve. Valves are acceptable if the condition can be removed by grinding.

l. Face denting, figure 6-17: Foreign particles between the valve face and the seat face during operation cause indentations in the surface without removal of metal. Accept valves with faces as shown if the condition can be removed by grinding.

m. Face cracking, figure 6-17: Radial cracking of exhaust valve face is caused by the face becoming overheated as a result of valve leakage. If the cracks are fine enough to be removed by grinding, the valve is acceptable.

n. Underhead erosion, figure 6-17: Note the evidence of underhead erosion at the edge of the face material. This condition is not detrimental unless the step at the line of demarkation between face and head material exceeds 0.020 inch. Reject valves with steps over 0.020 inch.

o. Neck erosion, figure 6-18: When the exhaust valve first opens the angle of the valve and seat faces causes the exhaust gages to impinge on the neck of the valve. If the gas temperature and velocity are high enough, the valve neck will erode as shown. Accept valves if the step can be blended and polished within the established limits for reconditioning valves.

p. Collapsed dome, figure 6-18: Collapsing of a valve dome, as shown, is a dimensional change without the removal of material. It is the result of excessive pressure which may be caused by abusive engine operation. Reject all valves with collapsed domes.

q. Figure 6-19 provides the minimum dimensions (service limits) to which service valves can be reconditioned and still be acceptable for installation in an engine.

r. Prior to recommending valve face grinding and following grinding, check the intake and exhaust valves using regrind limit gage.

s. After grinding the valve face, check the face angle of the intake and exhaust valves with bluing gage. Wipe the valve face perfectly dry. Blue the gage lightly and insert the valve. Rotate the valve 90 degrees, remove and inspect the face. The valve face must show 100 percent contact with the gage.

t. Refer to paragraph 6-496 for valve reconditioning.

6-134. NICKS AND DENTS ON NITRIDED INTAKE VALVE STEMS AND IN NITRIDED LOCK GROOVES. Cracks may nucleate in a nitrided surface around the edges of nicks and dents on valve stems and lock grooves.

a. For the purpose of differentiating, a dent will be considered as an impression with a round bottom and rounded edges as determined with a 16 power glass. A nick will differ from a dent in that its bottom will be pointed or sharp and/or its edges will be broken, sharp or ragged. Nicks are cause for rejection without further inspection.

NOTE

Intake valves with no more than one dent in the critical area of the stem may be reconditioned by stoning off raised metal adjacent to the dent. Follow stoning by polishing to a 10 microinch RMS or better finish.

b. Clean the valves in a carbon remover solution.

c. Super Pentrex inspect the valve following the procedure in paragraph 6-55.

d. Inspect the valve stem and lock groove under black light in a dark room. Reject valves if there are crack indications within an area 1-1/4 - 3-1/4 inches from the valve tip.

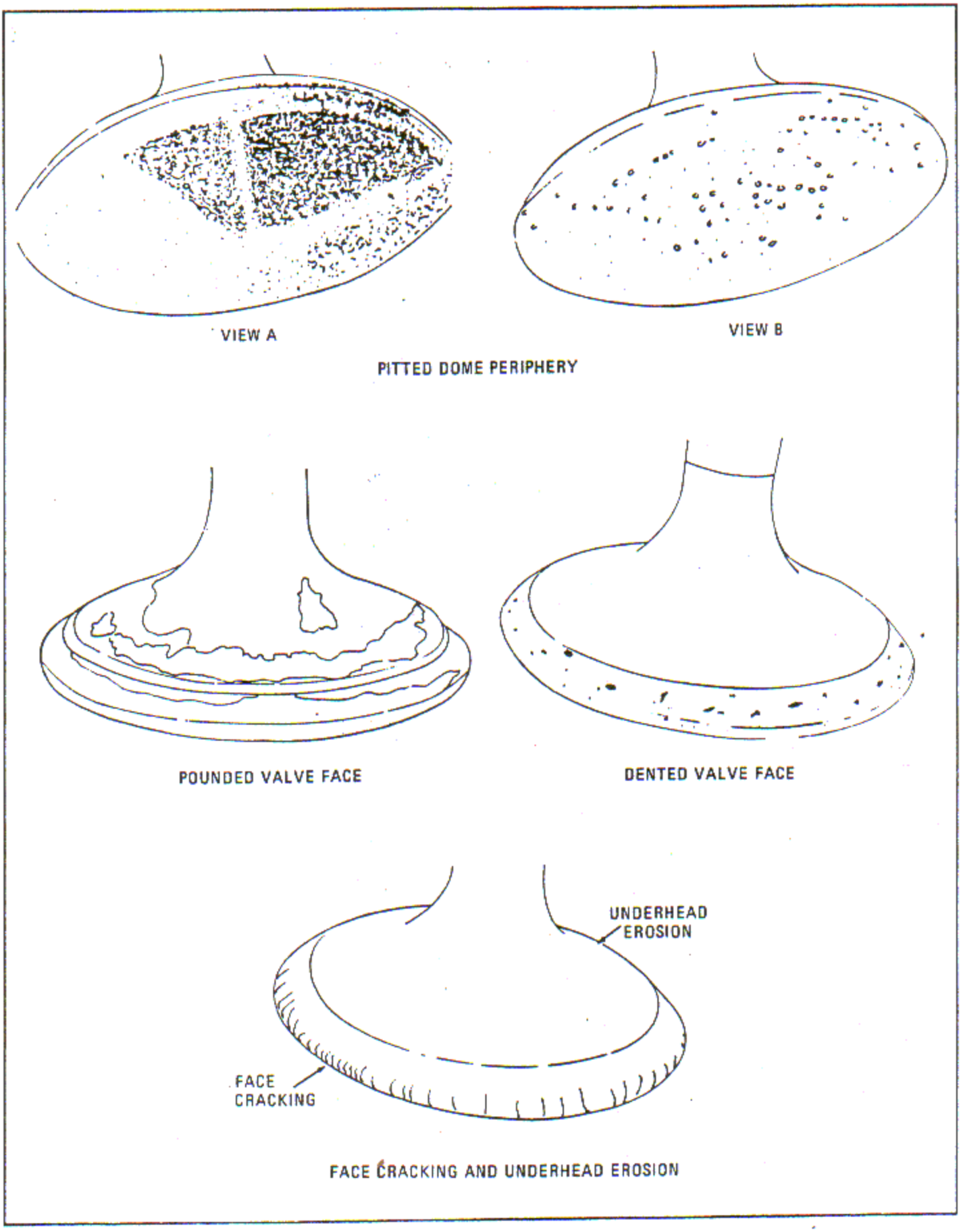

Figure 6-17. Inspection of Valve Face and Underhead

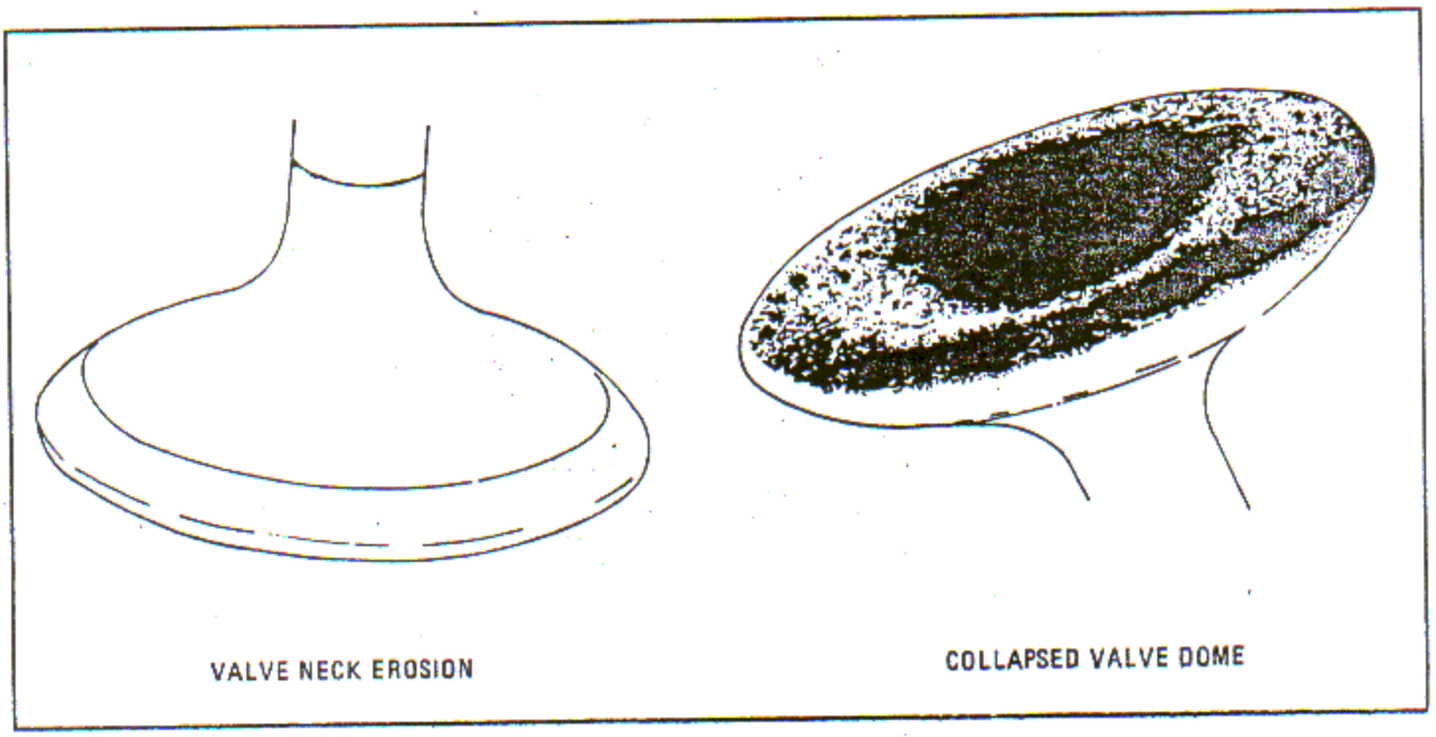

Figure 6-18. Inspection of Valve Neck and Dome

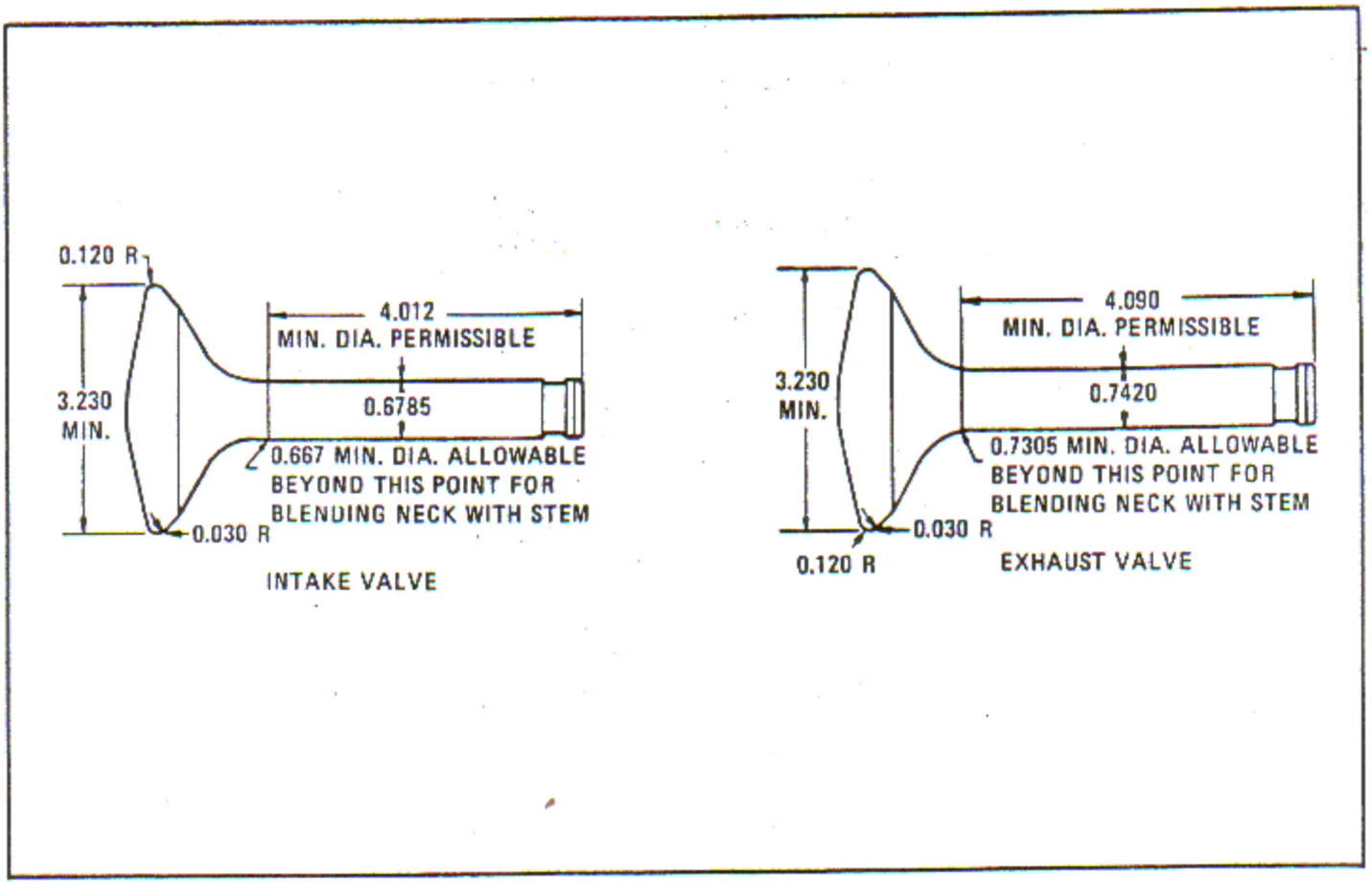

Figure 6-19. Valve Reconditioning Limits

e. Study questionable Pentrex indications with a 16 power binocular. Reject valves with crack indication within the area specified in step d.

f. Dents and crack indications in the stem outside of the critical area are acceptable provided the dents do not exceed 0.050 inch across the narrow section. Cracks, open so as to be visible to the unaided eye (without need for magnification or Pentrex inspection) in the non-critical areas are not acceptable.

g. Subject valves to ultrasonic inspection. Support the transducer and a test specimen (valve with a known crack on the interior surface) on the holding fixture immersed in inspection fluid.

h. Calibrate the ultrasonic unit and the transducer so that the initial impulse and back signal are visible and the defect indication registers 100% amplitude on the scope.

i. Replace the test specimen with a valve under test. Rotate the valve slowly by hand and observe the scope for indications between the initial impulse and back signal waves. Such indication imply the presence of an internal crack or porosity.

j. If the amplitude of the crack or porosity indication registers 20% or more on the scope the valve shall be rejected.

6-135. INTAKE VALVE CRACKING. In order to alleviate circumferential cracking at the underhead location of intake valves, reject all intake valves with clearances of 0.070 inch or greater, and reject all intake valves in engines subject to overhaul for overspeed.

6-136. VALVE LOCK GROOVE INSPECTION AND LIMITS. All lock grooves are to be Super Pentrex inspected for cracks.

a. Polish all lock grooves with a Tampico wheel or crocus cloth, Federal Specification P-C-458, prior to inspection.

b. Super Pentrex inspect the grooves, following the procedure in paragraph 6-55.

NOTE

This inspection and that required by paragraph 6-134 can be combined into one operation.

c. Valves are acceptable with pin-point indications; a maximum of three sharp, bright indications up to 1/32 inch in length, with a minimum separation between the indications equal to the longest indication; only one indication of more than 1/32 inch in length but less than 1/8 inch in length. See figure 6-20.

d. Borderline and questionable indications such as dull, pale fluorescing spots as a result of impressions, displaced material, or dents, should be studied under a binocular of not more than 30 power. Accept such valves if indications are not visible under binoculars.

e. Valves are not acceptable with sharp bright indications over 1/8 inch in length; more than three indications up to 1/32 inch in length as defined in step c. Reject valves in which cracks are found with up to a 30 power binocular as covered in step d.

6-137. VALVE SPRINGS INSPECTION.

NOTE

Ensure proper springs are used. Those springs with pointed tips are now obsolete. Refer NAVAIR 02A-35GH-4.

Inspect valve spring tips for sharp edges where the tips bear on the upper washer and the lower washer or the exhaust guide retainer. Break shrap edges with a 0.020 inch minimum approximate radius.

6-138. VALVE GUIDES. (See tool group 74.)

6-138A. Check the maximum wear of intake and exhaust valve guides with flat plug gage, for the intake guide and a locally manufactured flat plug gage, 0.7535 diameter, for the exhaust guide. See figure 6-21.

a. The guides, particularly the exhaust guide have a tendency to flare at the upper and lower ends during normal engine operation. If the flaring is accompanied by burning, or the gage can be inserted more than 3/8 inch in either end of the guide, the guide must be replaced.

b. Check the gap between the exhaust guide flange and the cylinder boss. If the gap exceeds 0.005 inch the guide must be replaced.

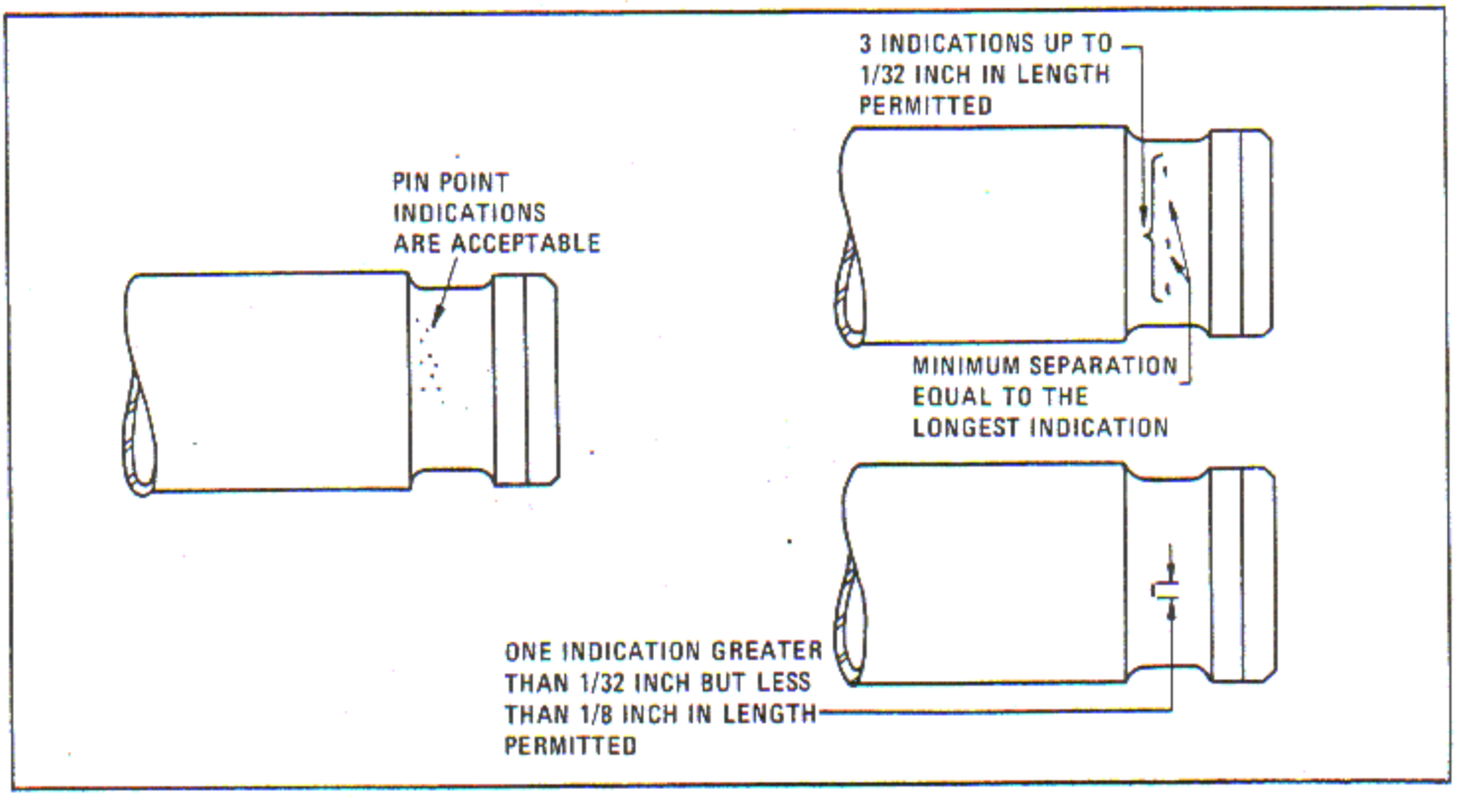

Figure 6-20. Valve Lock Groove Inspection Limits

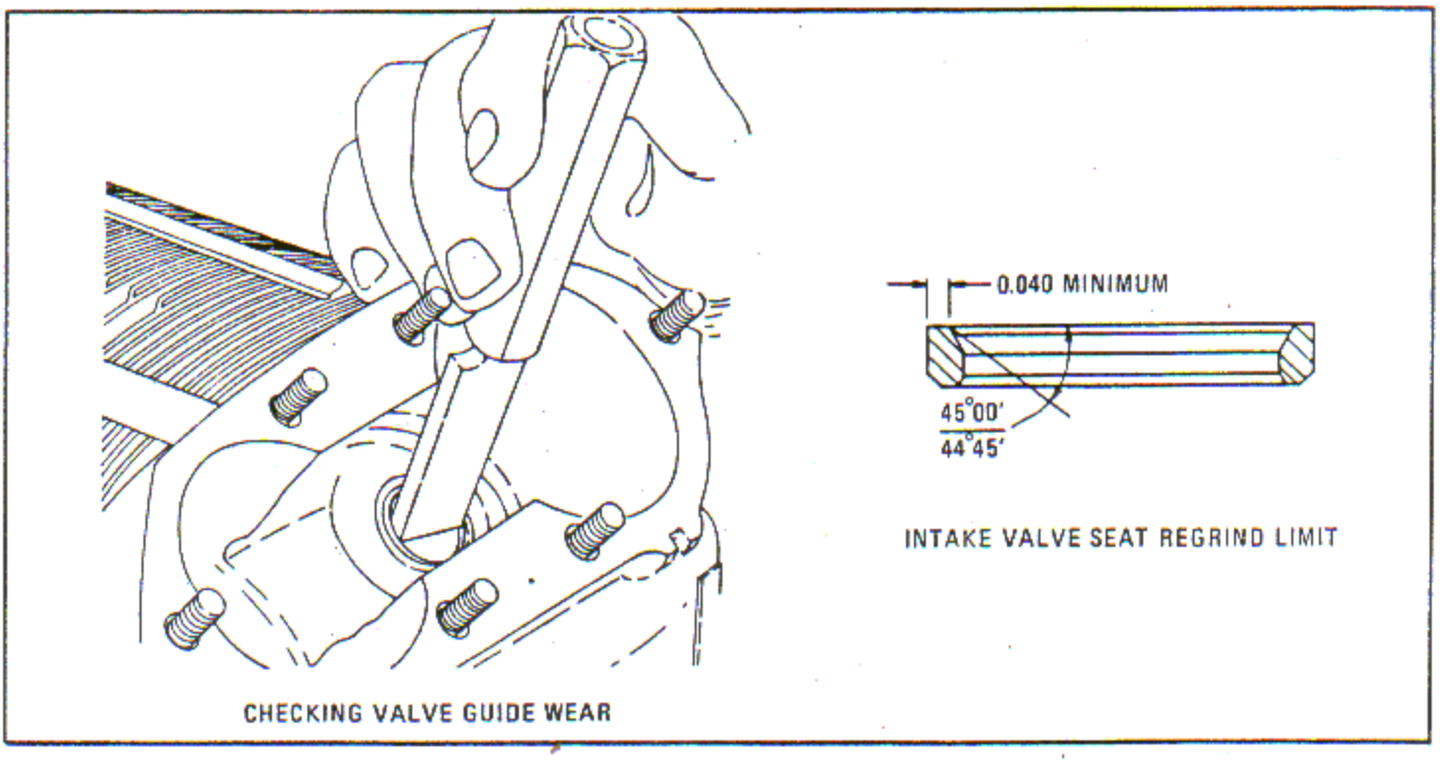

Figure 6-21. Checking Valve Guide Wear; and Intake Valve Seat Regrind Limit

6-139. EXHAUST GUIDE BOSS EROSION LIMITS. Inspect the exhaust valve guide boss for erosion. A minimum thickness limit between the finished machined guide boss bore and the outer surface of the eroded area of the boss is 0.150 inch. Install an appropriate oversize exhaust valve guide in accordance with paragraph 6-473.

6-140. VALVE SEATS. (See tool groups 47 and 75.)

a. Check valve seats to ensure they are bottomed in the recess. If a 0.002 inch thick feeler gage can be inserted under a seat, the seat must be replaced. Resetting a used seat is not permissible.

b. Exhaust valve seats may be reground until a maximum of 0.025 inch of material, measured perpendicular to the seat face, has been removed. The maximum regrind limit will be reached when the shoulders on gage are able to rest on the top surface of the seat.

c. Intake valve seats can be reground until the large diameter of the seat face is at a minimum distance of 0.040 inch from the seat OD. See figure 6-21.

d. After grinding, seat faces must be concentric with the ID of the guide within 0.005 inch full indicator reading. If the valve guide is new the seat faces must be concentric within 0.002 inch full indicator reading.

e. Check seat angle with bluing gage. Wipe valve seat perfectly dry. Blue the gage lightly and insert into the seat. Rotate the gage 90 degrees, remove and inspect the seat. The valve seat must show 100 percent contact with the gage.

6-141. VALVE TAPPET ROLLERS INSPECTION. The track on the roller face (OD surface) of cam valve tappet rollers caused by contact with the cam must be a continuous line of approximately constant width, no closer than 1/16 inch to the edges of the roller face. The centerline of the track should be a straight line and not wave from side to side. Any condition which results in a break in the smooth contour of the roller face is not acceptable. Superficial dents that do not reach to the outside of the roller face, and small dents approximately 1/32 inch in diameter, which do not break the surface and are spaced no closer than 1/8 inch are acceptable. When the tracks of the valve tappet rollers need reconditioning, refer to paragraph 6-560.

NOTE

Valve tappet rollers must be wet blasted at each overhaul. Refer to paragraph 6-565.

6-142. VALVE TAPPET SOCKETS INSPECTION. Inspect the shoulders of valve tappet sockets for wear and galling from contact with the end of the tappet. Refer to paragraph 6-569 for salvage instructions.

6-143. PUSH ROD HOUSING AND PUSH ROD INSPECTION.

a. Push rod housing sleeves that are worn are to be blended and polished. All sleeves having an OD of less than 1.074 inches, or a wear step in excess of 0.005 inch deep after blending and polishing are to be rejected. A locally fabricated NO-GO type snap gage may be used to facilitate inspection.

b. Place the push rod on two V blocks with the ball ends extended beyond the blocks. Set a dial indicator equidistant between the ends of the rod. Rotate the rod. Maximum allowable run-out shall not exceed 0.020 inch full indicator reading.

6-144. DEFLECTORS INSPECTIONS.

6-144A. GENERAL. Inspect deflector details for deterioration, wear, breaks and general condition.

NOTE

Rubber details that have retained their basic shape and elasticity may be continued in service. Replace unserviceable rubber details by drilling out the attaching rivets.

a. Replace deflector grommets and pads at every overhaul.

NOTE

Modify the 131698 or 131699 pads in accordance with figure 6-22.

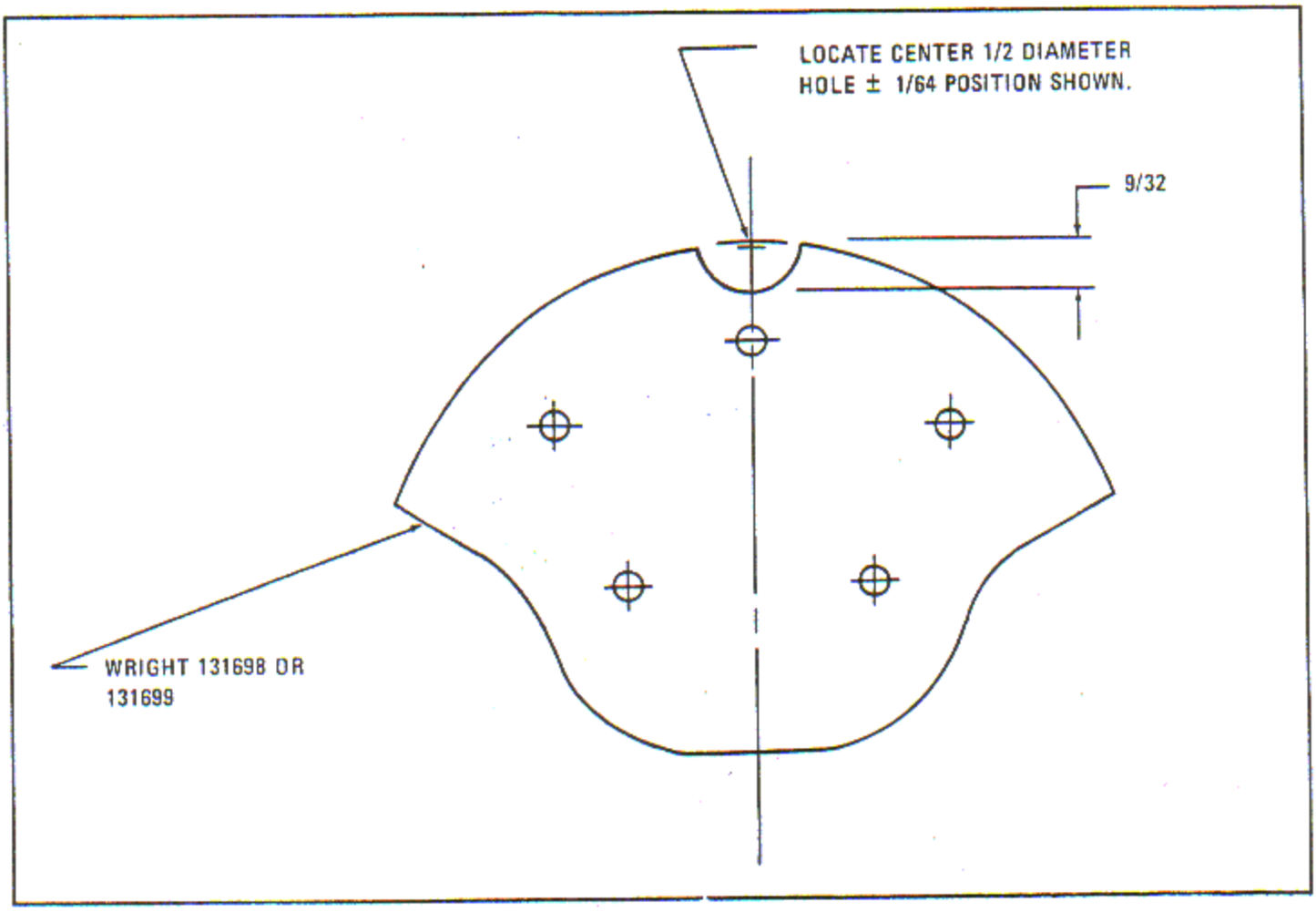

Figure 6-22. Modification of Deflector Pads

b. Inspect buttons, fasteners and all other attaching details for wear and general functional condition. Worn, damaged or loose details must be replaced at each overhaul.

NOTE

Local reconditioning of individual details is not permitted.

c. Inspect main deflectors for cracks, breaks, chafing and general condition with respect to shape and form.

NOTE

Deflectors may be re-formed to their original contours.

d. Breaks, cracks and chafed areas of main deflectors may be reconditioned by welding. Missing areas shall be reconditioned by patching. the affected area.

6-145. CYLINDER AIR DEFLECTOR CLAMPS. Cylinder air deflector clamps are considered serviceable within the following limits:

a. Wear of the individual retaining lugs does not exceed 1/16 inch of depth/length.

b. A maximum of two broken lugs, provided such lugs are non-adjacent.

6-146. SUPERCHARGER SECTION AND ACCESSORY DRIVES.

6-147. ENGINE MOUNT BOLTHOLES. Supercharger front housings that have worn or elongated engine mounting bolt holes may be salvaged by machining the worn holes and installing bushings. Refer to paragraph 6-576 for the salvage procedure.

NOTE

Use this procedure for those supercharger front housings that originally did not have mounting bolt hole bushings.

6-148. Supercharger Front Housing Face.

a. Inspect the supercharger front housing face for irregularities using a straight edge and a 0.004 inch feeler gage. If distortion or steps are present, but not in excess of 0.004 inch as measured by this procedure, the surface is satisfactory without further rework.

b. If the supercharger front housing face is unacceptable due to distortion or wear, mount the housing, rear end down, on a suitable vertical boring machine or turntable. The rear face shall be made to run true within 0.001 inch full indicator reading.

c. Mount a dial indicator perpendicular to the supercharger front housing face and approximately one inch outward from the pilot diameter. Use a large radius button on the dial indicator to allow the tip to override the machined edges of holes which will be intersected as the part is rotated.

d. Rotate the housing and observe the dial indicator reading. Disregard indications caused by the indicator button passing over the edges of the machined holes.

e. Maximum acceptable out-of-plane is 0.008 inch full indicator reading for one inch to either side of the three supercharger front housing to crankcase main section dowel holes (to include the full area lying between the two upper holes) and 0.004 inch elsewhere.

NOTE

Due to the tendency of the housing to deform in the areas of thin cross-section, it is important the dial indicator readings be noted only at the radius indicated.

f. If unacceptable within the foregoing standards, machine in accordance with paragraph 6-570.

6-149. Supercharger Front Housing Inspection For Wear. Inspect the supercharger front housing for wear grooves caused by contact with the diffuser vanes. Dispose of the housing in accordance with the following steps.

a. Discard the housing if any groove is deeper than 0.050 inch or if the housing is not otherwise repairable.

b. Continue the housing in service without groove repair if no groove is deeper than 0.024 inch and if the housing is otherwise acceptable.

c. Repair the housing in accordance with paragraph 6-573 if any groove is deeper than 0.024 inch but not to exceed 0.050 inch deep and if the housing is otherwise acceptable or repairable.

6-150. IMPELLER SHAFT BEARING SUPPORT.

NOTE

The I.D. of impeller shaft bearing supports may be finish machined to standard size, 2.192-2.193 inches, provided all evidence of wear is removed. Obtain a surface finish of 8 microinches or better.

a. Inspect the impeller shaft bearing support ID for wear. Worn supports may be reconditioned by honing the ID to a maximum of 2.203 inches. Supports worn beyond the 2.203 inches limit may be reconditioned by grinding to 2.213 inches and chrome plating. Refer to paragraph 6-580.

b. Examine the impeller shaft bearing support for leakage in accordance with the instructions provided in paragraph 6-769.

c. It is not necessary to remove the impeller shaft bearing support from the housing at overhaul unless replacement is required due to damage, wear or leakage.

NOTE

Fluorescent penetrant inspection of the support, in conjunction with the supercharger front housing fluorescent penetrant inspection, in lieu of magnetic particle inspection, is considered adequate when the support is not removed from the housing.

6-151. IMPELLER DRIVE MULTI-PLATE CLUTCH ADAPTER (R1820-76 SERIES, -86A, -86B).

a. Inspect the adapter for wear on the cam bushing contact surface.

b. Remove wear if necessary as instructed in paragraph 6-706.

6-152. IMPELLER DRIVE MULTI-PLATE CLUTCH INSPECTION (R1820-76 SERIES, -86A, -86B).

a. Inspect the clutch plates for a minimum thickness of 0.070 inch.

b. Restore the surface finish on tne clutch plate in accordance with paragraph 6-708.

c. Check the clutch plate for warpage. The plate shall be flat within 0.003 inch.

d. Examine the clutch disc for cracks with a 10 power glass. No cracks are permitted.

e. Discs shall be rejected if the coating material is chipped or if pitted in excess of that which is evidenced on a new, unused part.

f. Discs shall also be rejected if warped or distorted in excess of drawing limits or for any evidence of bonding failure.

g. Measure the thickness of the disc. It must be no less than 0.001 inch below minimum drawing limits.

6-153. IMPELLER CLUTCH CAM INSPECTION.

a. Inspect cams for nicks, worn flats and proper "X" marking; maximum permissible width of worn flat is 0.0625.

b. No nicks on cam lobe or rise are permitted.

c. Nicks on face opposite from cam rise may be blended to a 0.030 R by stoning or polishing.

6-154. Impeller Drive Multi-Plate Clutch Sleeve Inspection.

a. Measure the I.D. of the sleeve in the clutch piston ring travel area.

b. The I.D. must be smooth, circular within 0.001 inch and have a maximum dimension of 4.065 inches.

c. Sleeves not meeting this criteria may be reworked in accordance with paragraph 6-711.

6-155. IMPELLER AND INDUCER INSPECTION.

6-156. The impeller and inducer is a matched assembly identified by mating numbers stamped on the propeller side of each part. When either part is reworked or replaced, the assembly must be rebalanced. After balancing, mating numbers must be stamped on replaced parts. Stamp the numbers on inducers about midway between the base of the vanes and the splines. On impellers, stamp the numbers just outside the 4-3/4 inch (approximate) diameter clearance cut.

6-157. IMPELLER INSPECTION.

a. Inspect the impeller for surface defects, broken corners and wear with a three-power magnifying glass. Deep scoring or wear on either face of the impeller is cause for rejection. Isolated or scattered dents, nicks, scratches and /or corrosion pits not exceeding 0.032 inch in depth on the flat vane sides, the curved surface between vanes, and the flat front (propeller end) face, may be lightly blended by localized vapor blasting. Do not vapor blast excessively or exceed the 0.032 inch depth limit. Nicks, etc., not exceeding 0.032 inch depth may also be removed from the channel edges adjacent to the hub outer diameter, the rim outer diameter and the vanes, except for an area bounded by concentric five inch and seven inch diameter circles. Touch-up affected surfaces. Reject the impeller if surface defects are in excess of the above or are present in any fillet radii. Also reject the impeller if any bulges or buckling, as may result from a severe nick or dent, are present, if any blades are bent, or if the splines are excessively corroded.

b. Inspect for spline wear by placing the impeller on a good impeller shaft. The impeller splines must not allow the shaft splines to enter more than halfway through the impeller when parts are at room temperature. Worn impeller splines can be reconditioned by silver plating to a diametrical dimension of 1.6142 - 1.6172 inches. Refer to paragraph 6-825. Worn shaft splines may be reconditioned as instructed in paragraph 6-824.

c. If corrosion is found in the counterbore area (propeller side), the impeller may be reconditioned as instructed in paragraph 6-604 as shown in figure 6-23, View A.

d. Check the impeller vanes for proper taper. Make a suitable plug as shown in view B, figure 6-23. Place the plug on a surface plate. Set the impeller on the plug so the bottom of the counterbore rests on the shoulder of the plug. Indicate the inducer side of the impeller hub to be parallel with the surface plate within 0.001 inch full indicator reading.

e. With the hub surface parellel with the surface plate, check the vanes for the required taper by running the dial indicator the full length of each vane. The vane tips must be 0.003 - 0.007 inch above the hub surface. Impellers that do not have the required taper may be reconditioned as per instructions in paragraph 6-604.

6-158. INDUCER INSPECTION.

a. Check the impeller side of the inducer for flatness. Place the inducer, anti-impeller side down on the plug as shown in figure 6-23, view C. Check the inducer flatness with a parallel bar and a feeler gage as shown. If the hub and vanes are not flat within 0.001 inch across the entire surface, recondition the inducer as instructed in paragraph 6-612.

b. Inspect the inducer for hardness on the anti-impeller side of the hub. Reject inducers with a hardness of less than Rockwell B-50. Stone and polish accepted inducers to remove any metal raised by the hardness test.

6-159. Impeller Inspection After Foreign Object Damage. Supercharger impellers which are nicked or dented due to passage of foreign objects may be satisfactorily reworked provided:

a. Nicks or dents do not exceed 1/32 inch in depth.

b. No defects permitted on the impeller hub area within a radius of three inches from the hub axis.

c. All defects to be hand blended to restore a smooth contoured surface.

6-160. IMPELLER SHAFT OIL SEAL FRONT SLEEVE INSPECTION. Impeller shaft oil seal front sleeves with small surface defects (cracks) in the nitrided case at the air vent hole locations are acceptable if the cracks do not extend into either of the adjacent ring grooves. Reject any sleeve on which a crack has progressed into a ring groove. See figure 6-24 illustrating an acceptable and a non-acceptable condition.

6-161. SUPERCHARGER ROLLER CLUTCH ASSEMBLY INSPECTION (R1820-76 SERIES, -86A, -86B). Inspect all used roller clutch assembly parts to determine acceptability for further service in accordance with the following criteria.

6-162. IMPELLER LOW SPEED DRIVE CLUTCH CAM ASSEMBLY.

a. Examine the ramps to determine the maximum depth of wear and/or metal displacement which has resulted from roller contact.

b. Reject the cam assembly if one or more roller depressions are over 0.0015 inch deep; or if the depressions are clearly defined, they are not over 0.075 inch long (length of chord developed by depression).

6-163. IMPELLER DRIVE CLUTCH ROLLERS.

a. Examine each roller for flat areas and determine the minimum diameter.

b. Reject the roller if there is any evidence of skidding or distortion, or if the minimum diameter is less than 0.4370 inch.

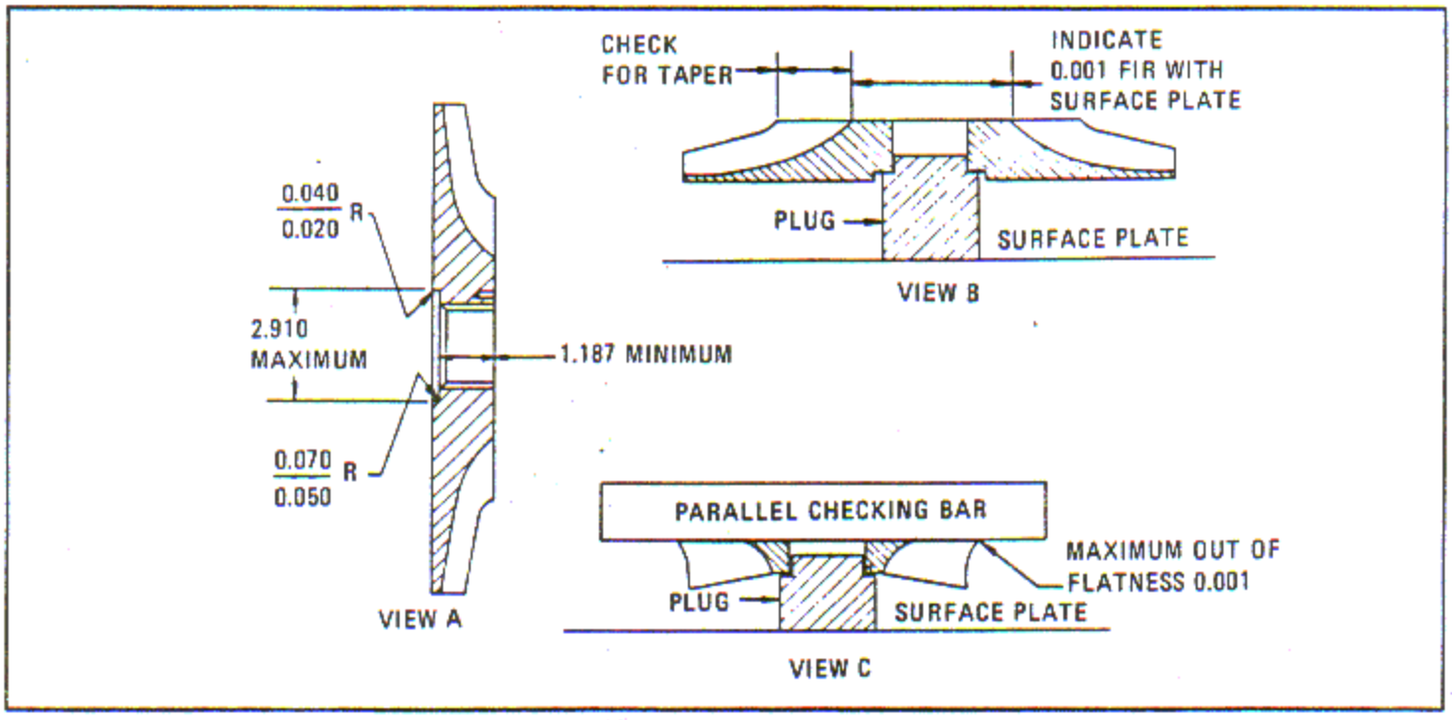

Figure 6-23. Impeller and Inducer Reconditioning Limits

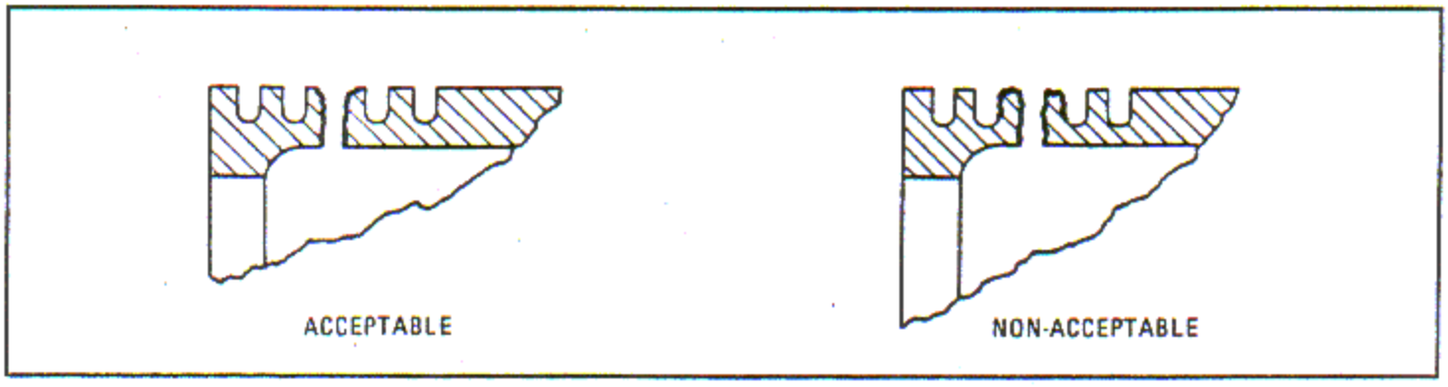

Figure 6-24. Impeller Shaft Oil Seal Front Sleeve Crack Limits

6-164. IMPELLER DRIVE ROLLER CLUTCH CAGE. Visually examine the cage. Reject the cage if there is any evidence of distortion, scoring or overheating.

6-165. CLUTCH ROLLER RETAINING AND GENERATOR DRIVE GEAR.

a. Examine the gear and determine the maximum inside diameter.

b. Reject the gear if the maximum diameter is greater than 3.068 inches.

6-166. SUPERCHARGER REAR HOUSING INSPECTION.

6-167. SUPERCHARGER REAR HOUSING SLEEVE. Inspect the supercharger rear housing sleeve ID for wear. Remove ring steps by honing as per paragraph 6-588. Impeller shaft rear oil seal rings are available up to 0.010 inch OD oversize which will fit sleeves honed to an ID of 2.202 - 2.203 inches. If the sleeve ID is worn beyond the 2.203 inch service limit, it may be reconditioned by grinding to a maximum cleanup size of 2.213 inches, and chrome plating. See paragraph 6-865. Replace sleeves that cannot be ground to clean up at a maximum ID of 2.213 inches.

6-168. SUPERCHARGER DRAIN VALVE RETURN TUBE, EXTENSION TUBE AND CLIP ASSEMBLY.

a. Inspect the tube and clip assembly for security in the supercharger rear housing.

b. Replace loose tube and clip assemblies as instructed in paragraph 6-626.

c. R1820-76 Series, -86A, -86B. Inspect the the screw boss threads in the supercharger rear housing using a standard plug gage for a class 3B thread (P.D. limits 0.1889 - 0.1913 inch). Repair worn or damaged threads as instructed in paragraph 6-631.

d. R1820-80, -80A, -80B. Rework the threaded boss hole for improved retention as instructed in paragraph 6-631.

6-169. ACCESSORY DRIVE AND STARTER SHAFT INSPECTION.

NOTE

Shafts which are pitted or worn on the front or rear thrust faces may be reworked in accordance with paragraph 6-665.

6-170. ACCESSORY DRIVE AND STARTER SHAFT SPLINE WEAR. When examining 19 tooth and 20 tooth accessory drive and starter shafts, limit spline wear to one-third the widths of the tooth, as determined at the tip of the spline.

6-171. ACCESSORY DRIVE AND STARTER SHAFT INSPECTION FOR TWIST.

a. Examine visually for shaft twisting.

b. Magnetic particle inspect shafts for cracks.

6-172. ACCESSORY DRIVE AND STARTER SHAFT COUPLING INSPECTION FOR NICKS AND CHIPS ON REAR FACE AND SPLINES. If nicks and chips on the rear face and splines do not exceed 0.015 inch in depth, regrind to clean up. Refer to paragraph 6-665.

6-173. ACCESSORY DRIVE GEAR SPLINE WEAR CHECKING.

6-174. Gage Assembly Setting.

a. Limit the gage dial indicator travel to one revolution with at least one half dial revolution preload. The required travel of the gage body basic sliding section is controlled by the top and bottom set screws.

b. The gage body actuating spring pressure is to be set with just enough compression to actuate the gage basic slide sections. See figure 6-25.

NOTE

Do not use excessive spring pressure which will exert high pressure on the jaw balls and parts being gaged.

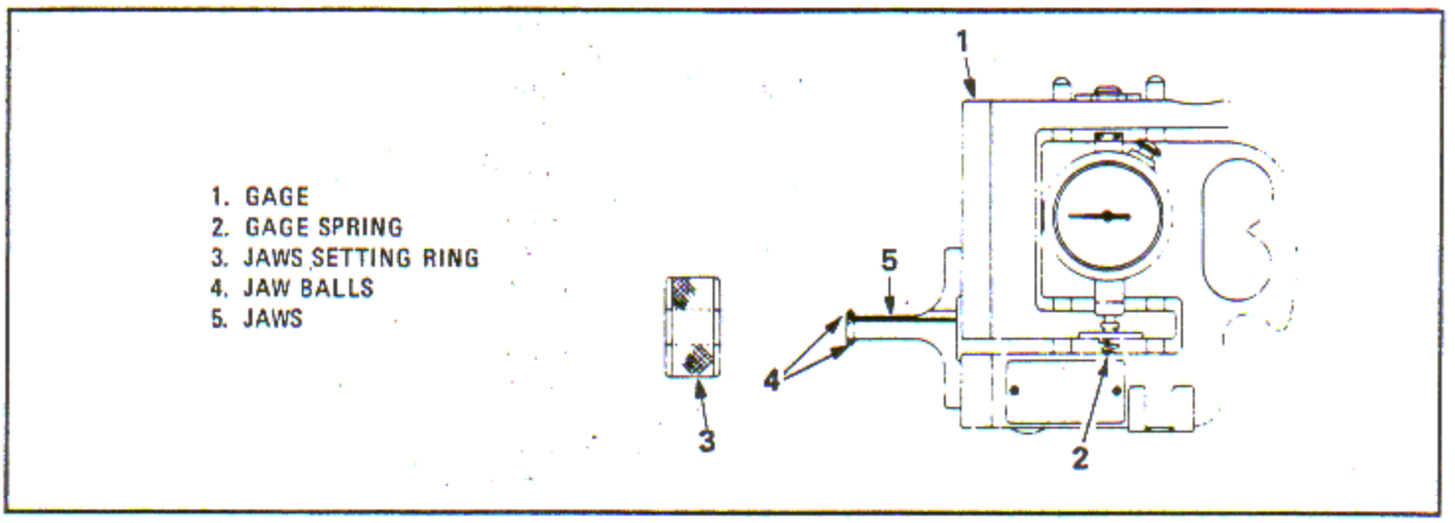

Figure 6-25. Gage Assembly Setting Procedure

6-175. Internal Spline Checking.

a. Thoroughly clean the splines to be checked with a stiff bristle brush and a suitable petroleum solvent.

b. Insert pre-set internal spline checking gage into the internal spline. Rock the gage balls through the center and record the minimum dial indicator reading. Try the gage in at least 50 percent of the number of splines.

c. Any internal spline giving a dial indicator reading of zero, or a reading clockwise (plus) from a zero setting is cause for spline rejection.

d. Any internal spline giving dial indicator readings counterclockwise (minus) from a zero setting is acceptable.

e. For internal spline tooth wear measurements other than the maximum wear limit, refer to figure 6-26 to interpolate dial indicator readings into actual spline wear.

INTERNAL SPLINE DATA

Spline P.D.	0.4583
Ball Size	0.085
Over Ball Dim.	0.4888
Max. Wear	0.008
Jaws	810384D1
Jaw Setting Ring	810384D2

6-176. SCAVENGE PUMP DRIVE SHAFT SPLINE WEAR.

a. Thoroughly clean the splines to be checked with a stiff bristle brush and a suitable petroleum solvent.

b. Using pre-set checking gage, check scavenge pump drive shaft internal splines.

6-177. GENERATOR DRIVE GEAR INSPECTION. Measure the internal spline wear using a Versa-Dial or suitable substitute equipped with 0.110 inch internal gaging segments. Measure at least 2 pair of splines at a depth of 0.5 to 1.0 inch from the open end of the gear. The maximum overall dimension is 0.840 inches.

6-178. STARTER COUPLING INSPECTION. Inspect starter couplings for wear and scoring. If the flange thrust face is scored, remove up to 0.010 inch of material to eliminate the scoring. The minimum acceptable flange thickness after reconditioning is; 0.100 inch for the -80 series, 0.113 inch for the -76 series and the -86 series engines. Refer to paragraph 6-663.

6-179. TACHOMETER DRIVE SHAFT GEAR ASSEMBLY SPRING INSPECTION. Place the tachometer drive shaft gear assembly on a spring tester with the tachometer drive oil seal thrust

spring retainer up. Apply pressure to the retainer and compress the spring 0.100 inch. If the gage reading is less than 4.0 pounds, replace the spring.

6-179A. FUEL PUMP DRIVE GEAR SUPPORT, PUMP LOCATING RECESS INSPECTION. Inspect the ID of the 1.781 - 1.783 inch diameter recess near chamfer. If it shows signs of gouging or wear, so as to allow misalignment of fuel pump by more than 0.005 inch, repair the recess as outlined in paragraph 6-769.

NOTE

When the fuel pump is mounted on the support assembly, the area of contact extends no more than 0.040 inch below the 0.030 inch chamfer on the 1.781 - 1.783 diameter recess.

6-180. SUPERCHARGER REAR COVER INSPECTION.

a. Inspect the rear cover for cracks at the magneto drive and oil strainer housing boss areas. Cracks up to a maximum depth of 1/8 inch may be removed as instructed in paragraph 6-718.

b. Inspect the supercharger rear cover oil strainer pilot hole in the area of greatest wear. If the ID is greater than 1.253 inches or if any surface defects exist which would allow oil contaminants to pass, the recess shall be reworked in accordance with paragraph 6-722.

c. In the recess provided for the clutch oil control valve sleeve, inspect the bore for scoring and for tapering or out-of-roundness beyond 0.0005 inches. Unsatisfactory bores shall be reconditioned as instructed in paragraph 6-758.

d. Inspect the supercharger clutch counterbore in the rear cover. The I.D. shall measure 4.156-4.158 inches and be circular within 0.001 inch. The counterbore shall be free of resin. If necessary, the counterbore shall be reconditioned in accordance with paragraph 6-757.

6-181. REAR OIL PUMP INSPECTION.

6-182. REAR OIL PUMP MATING SURFACES. Wear, distortion or damage to mating surfaces may be repaired as instructed in paragraph 6-773.

6-183. OIL PUMP CHECK VALVE. Pressure test pre-oil check valve as described in paragraph 6-185. If valve meets the test specifications, no further processing is necessary; if not, recondition in accordance with paragraph 6-184 and re-test.

a. Inspect the oil pump check valve for galling, scoring or any condition that might prevent its freedom to fully open or seat in the valve body.

b. Inspect the check valve body ID for scoring or metal pick-up. Inspect the valve seating surface.

c. Test the check valve spring. Refer to reference 522, Table of Limits, Section IX.

6-184. PRE-OIL CHECK VALVE INSPECTION AND REPAIR (NOT APPLICABLE TO INCREASED CAPACITY PUMP).

NOTE

Pressure test the pre-oil check valve as described in paragraph 6-185. If the valve meets the test specifications, no further processing is necessary; if the valve fails the pressure test, recondition the valve in accordance with the following instructions and re-test.

a. Remove the lockwire and unscrew the valve body (3, figure 6-27) from the fitting (4). Remove the coupling nut (2) and cap (1) from the valve body.

b. Remove and discard the O-ring seal (9).

c. Remove and discard the poppet valve assembly (8).

d. Remove and discard the valve tension spring (7).

e. Clean all parts and inspect for serviceability.

f. Reassemble the pre-oil check valve in the reverse order of disassembly, replacing the spring (7), poppet valve (8) and O-ring seal (9).

g. Torque the valve body (3) and fitting (4) to 450 inch-pounds.

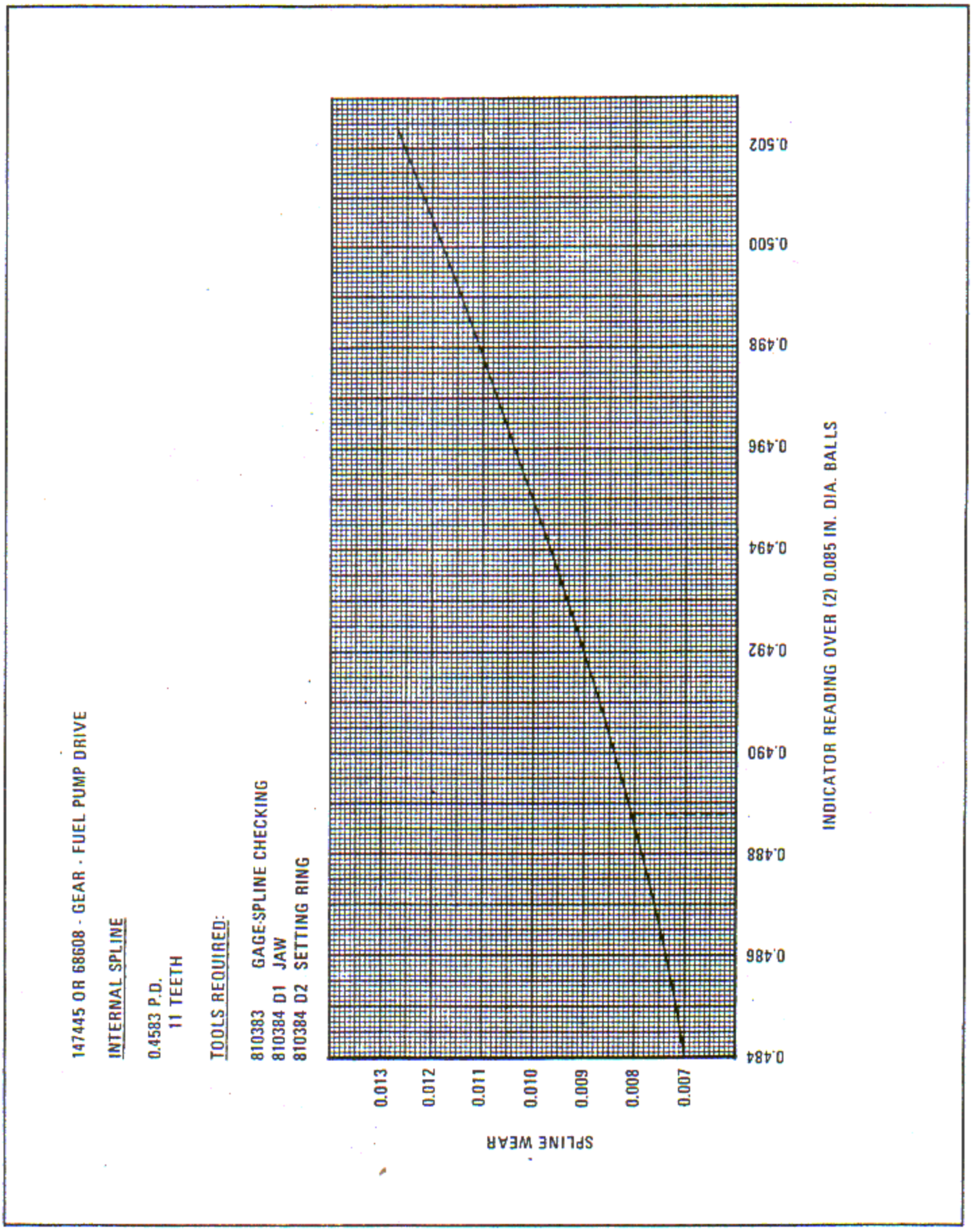

Figure 6-26. Internal Spline Tooth Measurement

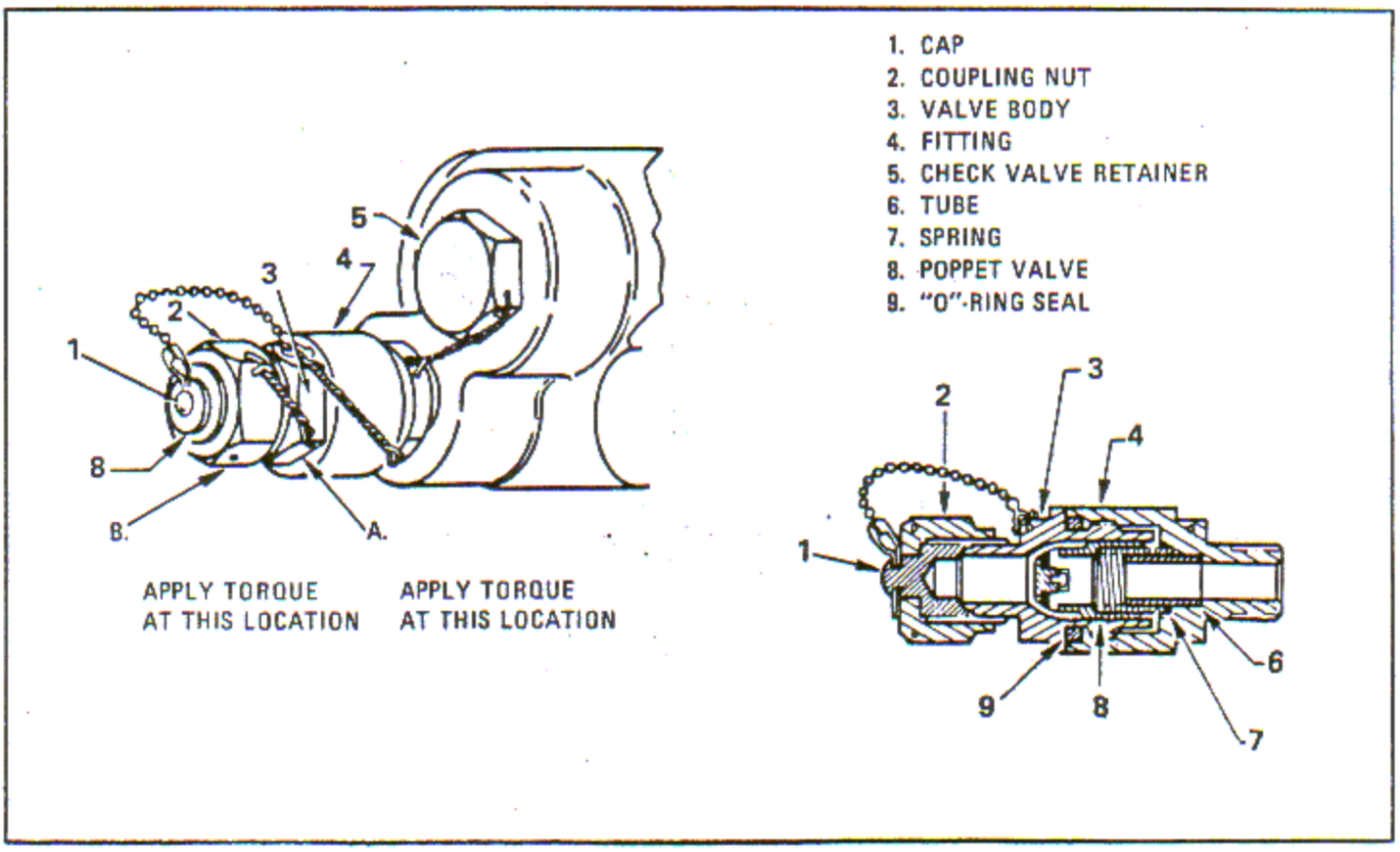

Figure 6-27. Pre-Oil Check Valve Assembly

h. Torque the valve coupling nut (2) to 80 - 100 inch-pounds.

i. Lockwire the pre-oil check valve fitting (4) to the oil pump check valve retainer (5) as shown.

j. Lockwire the pre-oil check valve body (3, figure 6-27) to the fitting (4) as shown.

k. Lockwire the pre-oil coupling nut (2) to the valve body (3) as shown.

6-185. PRE-OIL CHECK VALVE PRESSURE TEST.

a. Pressure test the valve using Grade 1100 oil, MIL-L-6082 at 75° ± 3° C (165° ± 5°F) or an oil of equivalent viscosity when used at room temperature.

b. Apply pressure to the inlet side of the valve. The valve shall start to open between eight and 12 psi inclusive.

c. Apply pressure to the fitting end of the valve (exit side).

(1). Hold 1/2 psi pressure for five minutes. There shall be no leakage past the poppet valve or at the O ring seal.

(2). Apply 200 psi pressure momentarily. There shall be no leakage past the poppet valve or O ring seal.

(3). Install the cap and coupling nut to the valve body after pressure testing. Torque the coupling nut to 80 - 100 inch-pounds and lock wire.

6-186. OIL-IN STRAINER INSPECTION.

6-187. PILOT DIAMETER OF OUTLET PORT. Inspect the pilot diameter of the outlet port. If the diameter measures less than 1.245 inches or is dented, nicked or scratched, the port shall be reworked in accordance with figure 6-27A.

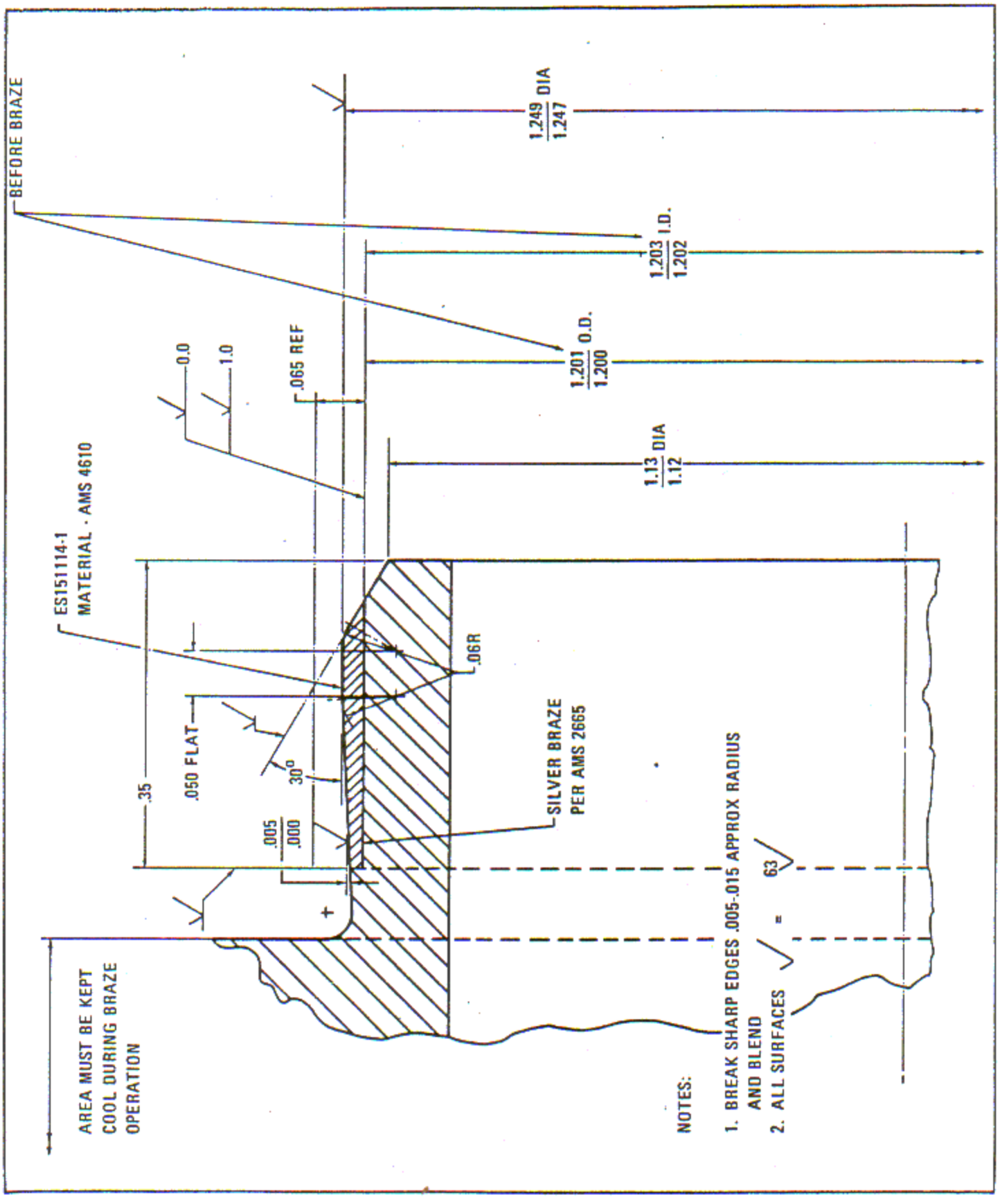

Figure 6-27A. Oil Strainer Pilot Hole Rework

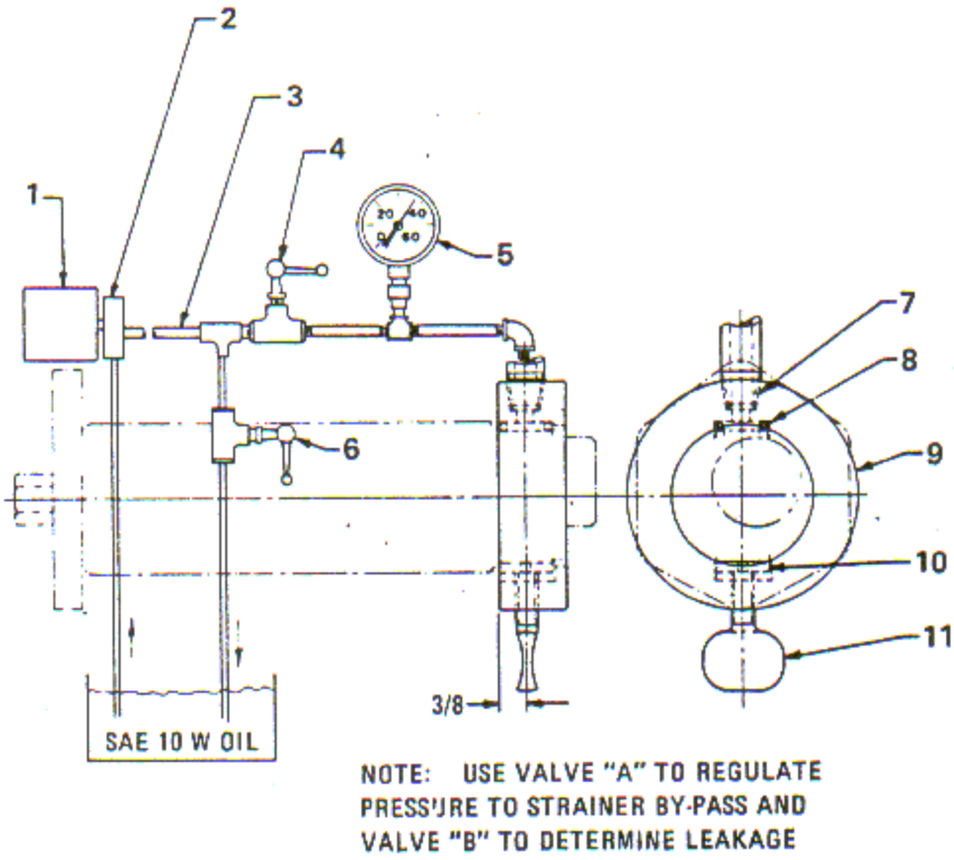

Figure 6-28. Oil Strainer By-Pass Valve Pressure Testing Rig

6-188. OIL STRAINER BY-PASS VALVE.

a. Completely disassemble the strainer including the removal of the by-pass valve retaining ring, disc, spring and ball. Discard the retaining ring. Rings are 100 percent replacement at overhaul.

b. Visually inspect the disc, spring and ball for nicks, burrs, dents, wear and surface imperfections.

c. Visually inspect the housing for cracks at the open end. Repair cracks by brazing, using AMS 4770 silver brazing alloy on the outside surface in accordance with AMS 2665. Re-inspect repaired area visually.

d. Inspect the retaining ring groove and the ball seating surface in the by-pass valve body (a brazed in detail of the strainer body assembly) for nicks and burrs. Note whether the edge of the ring groove is rounded so it cannot properly hold the retaining ring. Ensure the groove is clean of foreign material.

e. Check the spring tension as per reference 510, Table of Limits, Section IX.

f. Reject parts with any condition which could result in malfunction of the valve.

g. Reassemble the by-pass valve using accepted parts. Install the valve body in a rig similar to the one shown in figure 6-28 and test at a minimum pressure of 35 psi. The valve must not start to open or leak at less than this pressure.

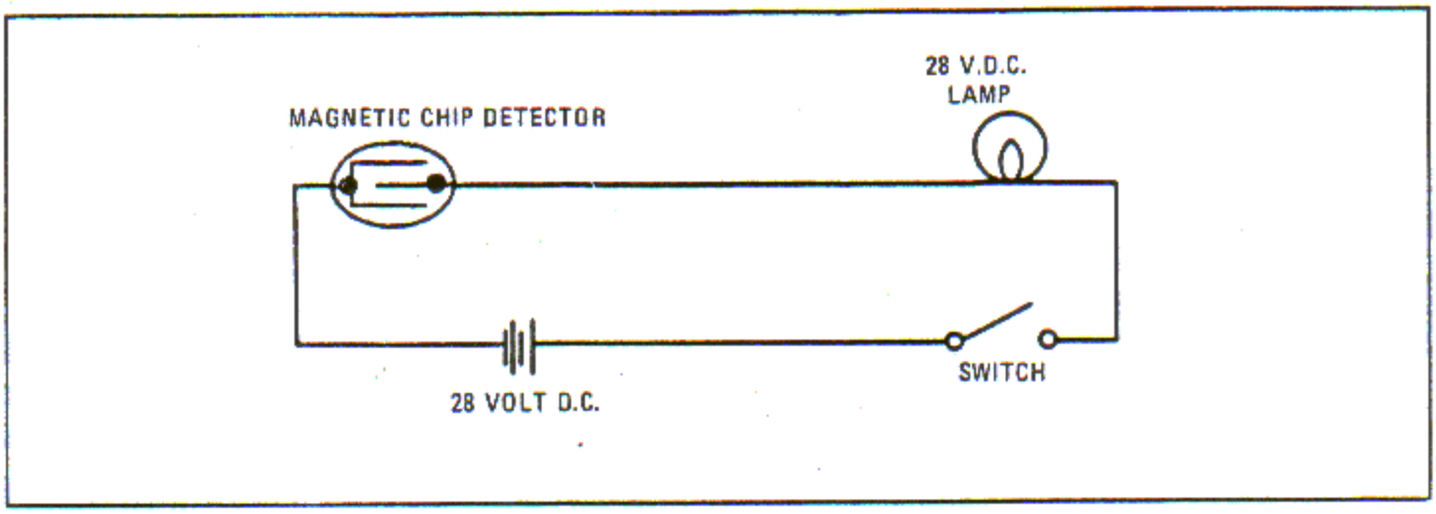

Figure 6-29. Magnetic Chip Detector Plug Circuit Tester Wiring Diagram

h. If leakage occurs at less than 35 psi, remove the retaining ring, disc and spring. Suitably support the valve body to prevent distortion. See figure 6-242. Hold a soft metal drift against the ball, and lightly tap to seat the ball.

i. Repeat the pressure test to ensure the valve does not leak with less than 35 psi.

j. If the valve still leaks, the seat in the valve body is distorted. Rework the seat in accordance with paragraph 6-774.

NOTE

At time of assembly, the disc retaining ring must be firmly seated in the valve body groove to ensure it will not become dislodged during engine operation.

6-189. MAGNETIC CHIP DETECTOR PLUG INSPECTION. Inspect all magnetic chip detector plugs using a test circuit similar to that shown in figure 6-29. If the test lamp glows, the chip detector is shorted and should be reconditioned as instructed in paragraph 6-777.

NOTE

The test lamp should be tested periodically to ensure that it is operating.

6-190. REPAIR AND REPLACEMENT.

6-191. GENERAL. The repair and replacement instructions described in subsequent paragraphs of this section are generally illustrated by line drawings which show the engine parts in relation to the required tools for the operation. Follow the recommendations of the inspector on all parts to be reconditioned. Where there are no recommendations, treat all minor scratches, roughness or chafing with crocus cloth, Federal Specification P-C-458, wet with kerosene, Federal Specification P-S-661.

CAUTION

Do not weld cylinder heads in any location other than those specified.

6-192. The following engine parts where cracked, worn or where material build-up is required may be reconditioned by welding: intake pipes, push rod housings, fireseal adapters and cylinder air deflectors. It is also permissible to weld cylinder heads at the rocker box cover parting surfaces to repair mutilation, and to build-up cowl attaching stud bosses.

a. Clean and inspect the weld for cracks. The reverse side of the weld, where visible, should reveal uniform penetration. Gold laps, undercuts, blowholes, inclusions or porosity are not acceptable.

b. Heat treatment after welding is not required.

6-193. When using beeswax, Federal Specification C-B-191, or paraffin, Federal Specification VV-W-95, to plug oil holes and passages prior to drilling or reaming, do not apply it in a melted condition as it will cause difficulty in removal. Soften the wax by hand until it is pliable enough to be inserted in the holes or passages.

6-194. To obtain alignment of oil holes in a bushing with corresponding holes in an engine part when pressing in a new bushing, draw a pencil line lengthwise on the bushing through the center of the oil hole, parallel with the bore. Do the same with the bushing hole in the mating part, and align the two pencil marks prior to pressing in the bushing.

6-195. After a part has been reconditioned, it should be rigidly inspected before being assembled to the engine.

6-196. Table 6-8 presents a listing of the repair and reconditioning procedures contained in the remaining portion of this section necessary to restore specific components to operating condition.

TABLE 6-8. REPAIR AND REPLACEMENT

Component	Figure Reference	Procedure	Paragraph Number
General			
Cutting Oils and Coolants		Lubricants and Coolants	6-197
Miscellaneous Headless Screw Bushings		Replacement	6-201
Miscellaneous Studs	6-30 and 6-38	Replacement	6-206
Hexagon Head Screw Bushings	6-31	Replacement	6-214
Anti-Friction Bearings		Reconditioning	6-219
Welding Engine Parts		Welding	6-223
Crankcase Front Section			
Crankcase and Front Section - Rework	6-42	Reconditioning	6-225
Crankcase Front Section Attaching Bolt Holes		Repair	6-227
Crankcase Front Section to Crankcase Main Section Bolt Hole Spotfaces		Rework	6-228
Crankcase Front Section Oil Transfer Dowel, Oil Seal Ring, Seating Surface	6-33	Repair	6-229
Propeller Shaft Thrust Bearing Retainer	6-34 through 6-36	Replacement	6-230
Crankcase Front Section Stationary Reduction Gear Seating Surface		Repair	6-236
Valve Tappet Guide OD and Housing Guide Bores and Pad	6-37 through 6-40	Reconditioning	6-237
Wye Type Hydro Oil Connector	6-41 through 6-45	Replacement	6-243
Oil Sump Scavenge Pump Drive Shaft Gear Bushing	6-46 and 6-47	Replacement	6-248
Governor Drive Gear Shaft Bushing	6-48 through 6-50	Replacement	6-252

TABLE 6-8. REPAIR AND REPLACEMENT (Cont'd)

Component	Figure Reference	Procedure	Paragraph Number
Propeller Shaft Bushing (R1820-76 Series and -86 Series)	6-51 through 6-57	Replacement	6-258
Propeller Shaft Bushing (R1820-80)	6-58 through 6-63	Replacement	6-271
Propeller Shaft Sleeve		Rework	6-280
Propeller Shaft Thrust Bearing Spacers		Reconditioning	6-281
Stationary Reduction Gear (R1820-76 Series) and -86 Series)	6-64	Honing	6-282
Stationary Reduction Gear (R1820-76 -76C, -76D, -86A, -86B)		Reconditioning	6-284
Stationary Reduction Gear Support Sleeve (R1820-80)	6-65	Honing	6-288
Stationary Reduction Gear Support and Sleeve ID (R1820-80)	6-66 and 6-67	Reconditioning	6-290
Reduction Gear Pinion Bore (R1820-80)	6-68	Grinding	6-297
Reduction Gear Pinion Carrier Trunnion (R1820-80)	6-69 through 6-70	Grinding	6-300
Balanceweight and Balanceweight Drive Gear Bores (R1820-80)	6-71	Grinding	6-304
Cam and Oil Sump Pump Drive Gear Support Ring	6-72	Replacement	6-307
Cam and Balanceweight and Oil Sump Pump Drive Support Cam Bearing (R1820-80)	6-73	Replacement	6-310
Cam and Oil Sump Pump Drive Support Bushings (R1820-76 Series, -80A, -80B, -86A, -86B)	6-74 through 6-78	Replacement	6-313
Cam and Balanceweight and Oil Sump Pump Drive Support Trunnion (R1820-80)	6-79 and 6-80	Grinding	6-320
Cam and Balanceweight and Oil Sump Pump Drive Support, Balanceweight Retaining Bolt Holes	6-81	Reaming	6-323
Cam Tracks, Vapor Blasting		Reconditioning	6-325
Crankcase Main Section			
Crankcase Cylinder Deck Grinding	6-82	Reconditioning	6-326
Cylinder Hold-Down Cap Screw Hole Threads	6-83 through 6-85	Reconditioning	6-329
Crankcase Main Section Rear Bearing Liner	6-86 through 6-89	Replacement	6-331
Crankshaft Front End Extension Journals Grinding	6-90	Reconditioning	6-339
Crankshaft Crankpin Grind and Lap for Undersize Master Rod Bearing	6-91 and 6-92	Replacement	6-341
Crankshaft Crankpin Front Thrust Face	6-93	Grinding	6-345
Front and Rear Counterweight Bushings and Bearings (R1820-76A/B, -80)	6-94 through 6-99	Replacement	6-347
Front and Rear Counterweight Bushings and Bearings (R1820-76C, -76D, -80A, -80B, -86A, -86B)	6-100 through 6-104	Replacement	6-359
Crankshaft Rear End Crankpin Bore Front Thrust Face	6-105	Grinding	6-372

TABLE 6-8. REPAIR AND REPLACEMENT (Cont'd)

Component	Figure Reference	Procedure	Paragraph Number
Crankshaft Rear End, Removal of Nitride Case Cracks at Clamp Bolt Area	6-106	Reconditioning	6-373
Crankshaft Rear End Accessory Drive and Starter Shaft Coupling Splines	6-107 and 6-108	Salvage	6-376
Master Rod Knuckle Pin Holes, Grinding Peening and Honing	6-109	Reconditioning	6-383
Knuckle Pin Grinding	6-110	Reconditioning	6-387
Piston and Knuckle Pin Bushings	6-111 through 6-115	Replacement	6-389
Master Rod Bearing Bore, Oversize Honing	6-116	Reconditioning	6-402
Master Rod Hub Outside Diameter	6-117	Reconditioning	6-403
Master Rod Anti-Propeller Hub Journel and End Face	6-118	Reconditioning	6-408
Master Rod Oil Seal Disc, (R1820-76C/D, -80A, -80B, -86A, -86B)	6-119	Reconditioning	6-410
Cylinders			
Cylinder Hold-Down Flange	6-120 through 6-122	Reconditioning	6-412
Cylinder Bore	6-123 and 6-124	Reconditioning	6-417
Cylinder Head or Barrel	6-125 through 6-129	Replacement	6-421
Spark Plug Insert	6-130 and 6-131	Replacement	6-428
Outer Push Rod Housing Connection	6-132 and 6-133	Replacement	6-440
Cylinder Barrel Cooling Fins	6-134 and 6-135	Replacement	6-444
Cylinder Head Fin Profiling Limits	6-136 and 6-137	Replacement	6-451
Cylinder Head Vertical Fins Baffle Attaching Bolt Spacer Solid Boss	6-138 through 6-140	Salvage	6-453
Cylinder Barrel Fins and Head Fin Silastic Fin Braces	6-141 and 6-142	Replacement	6-459
Intake Valve Seat and Guide	6-143	Replacement	6-464
Exhaust Valve Seat and Guide	6-144 through 6-151	Replacement	6-473
Intake and Exhaust Valve	6-152 and 6-153	Reconditioning	6-496
Cylinder Valve Seats Pressure Testing	6-154 and 6-155	Testing	6-497
Rocker Box Cover Mating Surface	6-156	Reconditioning	6-504
Rocker Arm Plain Bushing, Intake and Exhaust Valve	6-157 and 6-158	Replacement	6-505
Rocker Hub Bolt Bushing	6-159 through 6-164	Replacement	6-509
Rocker Arm Assembly	6-165	Reconditioning	6-519
Rocker Arm Bushing	6-166	Replacement	6-521
Rocker Arm Roller Pin	6-167 and 6-168	Replacement	6-528
Rocker Arm Spacer		Reconditioning	6-532
Rocker Arm Thrust Washer		Reconditioning	6-533
Intake Pipe Drain Boss	6-169 and 6-170	Salvage	6-534
Exhaust Pipe Connection or Sleeve	6-171 through 6-176	Replacement	6-538
Exhaust Pipe Flange to Cylinder Exhaust Port Attaching Stud	6-177	Replacement	6-544
Piston Ring Grooves	6-178 and 6-179	Reconditioning	6-556
Valve Tappet Roller Tracks	6-180	Reconditioning	6-560

TABLE 6-8. REPAIR AND REPLACEMENT (Cont'd)

Component	Figure Reference	Procedure	Paragraph Number
Valve Tappet Rollers	6-181	Reconditioning	6-563
Valve Tappet Rollers Wet Blast		Reconditioning	6-565
Valve Tappet Socket	6-182	Salvage	6-569
Supercharger Front Housing			
Supercharger Front Housing Mounting Face	6-183	Reconditioning	6-570
Supercharger Front Housing at Diffuser Plate Contact Area		Reconditioning	6-573
Supercharger Front Housing Mounting Bolt Holes	6-184	Repair	6-576
Supercharger Front Housing Wear Groove		Repair	6-578
Impeller Shaft Bearing Support, Supercharger Rear Housing Impeller Shaft Sleeve, Honing, Oil Seal Ring Fitting	6-185 through 6-189	Replacement	6-580
Front and Rear Impeller Shaft Oil Seal Sleeve Groove Grinding for Oversize Widths	6-190	Reconditioning	6-595
Impeller Shaft Bushing	6-191 through 6-193	Replacement	6-597
Impeller Reconditioning and Static Balancing	6-194 through 6-196	Reconditioning	6-604
Supercharger Rear Housing			
Supercharger Rear Housing Carburetor Mounting Pad	6-197	Salvage	6-615
Carburetor Attaching Studs	6-198	Replacement	6-617
Supercharger Rear Housing Drain Valve Extension Tube	6-199	Replacement	6-626
Supercharger Rear Housing Oil Seal Vent Tube	6-200 through 6-203	Replacement	6-632
Oil Sump			
Clean-Out Plugs	6-204	Reconditioning	6-639
Strainer Sleeve Boss	6-205	Repair	6-648
Diffuser Plate Vane	6-206	Reconditioning	6-650
Diffuser Plate to Supercharger Rear Section, Tight Fit	6-207	Reconditioning	6-656
Supercharger Rear Housing Pilot Diameter	6-208	Repair	6-662
Accessory Drive and Starter Shaft Thrust Face		Grinding	6-663
Accessory Drive and Starter Shaft Coupling		Grinding	6-665
Accessory Drive and Starter Shaft Coupling	6-209	Reconditioning	6-666
Accessory Drive and Starter Shaft Spherical Oil Seal and Retainer	6-210	Lapping	6-667
Starter Coupling Thrust Face	6-211	Reconditioning	6-670
Impeller Low Speed Drive Clutch Cam Assembly to Roller Clutch Cage Clearance		Rework	6-672
Impeller Drive Clutch Housing	6-212	Machining	6-673

TABLE 6-8. REPAIR AND REPLACEMENT (Cont'd)

Component	Figure Reference	Procedure	Paragraph Number
Impeller Intermediate Drive Shaft Front and Rear Bushings (R1820-80)	6-213	Replacement	6-674
Impeller Intermediate Drive Shaft Front Bushing (R1820-76 Series and -86 Series)	6-214	Replacement	6-682
Intermediate Impeller Drive Gear Bushing (R1820-76 Series and -86 Series)	6-215	Replacement	6-688
Intermediate Impeller Shaft Drive Gear Bushing (R1820-76 Series and -86 Series)	6-216	Replacement	6-694
Impeller Low Speed Drive Clutch Cam Bushing	6-217	Replacement	6-702
Impeller Drive Multi-Plate Clutch Adapter (R1820-76 Series and -86 Series)		Reconditioning	6-706
Impeller Drive Pinion Gear Bushing	6-218	Rework	6-710
Fuel Pump Drive Shaft Support Bushing	6-219	Replacement	6-712
Supercharger Rear Cover			
Supercharger Rear Housing Cover Cracks		Repair	6-718
Drain Slot	6-220	Machining	6-719
Supercharger Rear Housing Cover Plug Boss	6-221	Repair	6-720
Magnetic Drain Plug Adapter Boss	6-222	Rework	
Oil Strainer Pilot Hole	6-223	Rework	6-722
Supercharger Rear Cover Bushings	6-224 through 6-234	Replacement	6-723
Magneto Pads	6-235	Repair	6-755
Generator Pads	6-236 and 6-237	Repair	6-756
Machining and Studding Assembly	6-238	Repair	6-757
Tachometer Drive Shaft Gear Small Bushing	6-239	Replacement	6-759
Dual Accessory Drive Housing Machining	6-240	Repair	6-765
Dual Accessory Drive Housing and Cover Bushings	6-241	Replacement	6-766
Rear Oil Pump Mating Surfaces		Repair	6-773
Oil Strainer By-Pass Valve	6-242	Reconditioning	6-774
Oil Strainer Housing	6-243	Repair	6-775
Oil Pressure Relief Valve and Body	6-244	Rework	6-776
Magnetic Chip Detector Plug	6-245	Reconditioning	6-777
Supercharger Clutch Oil Control Valve	6-247	Repair	6-781

6-197. CUTTING OILS AND COOLANTS.

6-198. Tables 6-9, 6-10 and 6-11 designate the type and application of cutting oils and coolants that are recommended for the various tool operations performed during the repair and replacement of engine parts.

6-199. Table 6-9 designates the blend symbols to be used in Table 6-10. For example, if a tapping operation were to be performed on an aluminum alloy component, blend symbol 536 would indicate the correct mixture to be used for this procedure. The numbers shown in Table 6-10 indicate the number of parts by volume of the base fluids that comprise the mixture represented by blend symbols. For example, to make blend 536, mix 10 per cent by volume of base 10 and 90 per cent by volume of base wax.

NOTE

Blend symbol numbers 20 and 960 are included in Table 6-10 for the purpose of giving complete cutting oil and coolant information in tabular form. Actually, these fluids, as blend symbols, are not mixed with other materials, but are used as received from the manufacturer. However, when fluids 20 and 960 are shown as base numbers, they may be mixed with other bases to form additional blends.

6-200. Table 6-11 identifies the materials that are represented by base numbers in Table 6-10 and also lists a source of supply.

6-201. MISCELLANEOUS HEADLESS SCREW BUSHINGS REPLACEMENT. (See tool group 59.)

6-202. Remove Bushing. Force applicable removing tool into the bushing to a depth of 3/8 inch. Remove the bushing by unscrewing it with a wrench on the tool square.

6-203. RETAP FOR NEW BUSHING. When replacing a bushing with another bushing of the same size, run the proper size tap into the hole to clean up threads without removing any metal. When retapping for next oversize bushing use the proper tap selected from the following list.

0.003 OS	0.007 OS	0.012 OS	
A	B	C	For 7/16 - 20 bushing
A	B	C	For 1/2 - 20 bushing
A	B	C	For 9/16 - 18 bushing
A	B	C	For 5/8 - 18 bushing

6-204. Install New Bushing

a. Screw bushing on proper installing tool to full depth and screw the bushing into the work using socket wrench, and torque wrench.

CAUTION

Unless otherwise specified, anti-seize compound composed of (by weight) 75 per cent petrolatum, melting point 49 - 60°C (120 -140°F) and 25 per cent graphite, powdered flake, (Industrial Emulsions Co., Nutley, N.J.), or equivalent shall be applied to male threads. Excessive amounts of lubricant shall be avoided. Use only sufficient lubricant to cover the threads with a thin layer.

b. The minimum driving torque for the bushing being driven must be obtained before the shoulder of the installing tool contacts the pad face. If the torque is correct, drive the bushing until the shoulder contacts the pad. The following list contains bushing sizes and their minimum driving torques.

Bushing Size ID	Minimum Driving Torque In./lb
1/4 - 28 thd	50
5/16 - 24 thd	100
3/8 - 24 thd	150
7/16 - 20 thd	250

6-205. Retap Inside Diameter of Bushing. Retap inside of bushing with an applicable tap. Remove sharp edges and burrs using a standard countersink cutter.

TABLE 6-9. BLEND SYMBOL

MATERIAL	MACHINING OPERATION											
	Boring	Broaching	Drilling	Reaming	Grinding	Gear Hobbing	Gear Cutting	Gear Grinding	Honing	Milling	Thread Milling	Tapping	Turning
Aluminum and Aluminum Alloys	5 61	23 5	5 61	5 61	51	-	-	-	-	5	5	536	23 61
Magnesium and Magnesium Alloys	5	-	5	5	-	-	-	-	-	Dry	-	5	5
Brass and Bronze	5	5	5	5	51	-	-	-	-	Dry	-	5	5
Corrosion and Heat Resistant Alloys	20 33	33	20 33	20 33	51X	-	-	-	84	20	2 20	20 33	Mist 8
Nitrided Steels	-	-	8	8	51X	-	-	-	82	20	2	20	61
Carburized Steels	61	20 33	8	8	51	4 33	4	8	82	8	8	8	8
Inconel	20	33	20	20	2	-	-	-	-	20	-	33	8 20
Mild-Steel	61	20 33	8 20	8 20	8 51	-	-	-	-	8 20	8 20	20 33	61
Nimonic	-	22	20	20	20	-	-	-	-	-	-	20 33	-
Ni-Resist	20	33	20	20	51	-	-	-	-	20	-	20	20 61
Casting Alloy HC -250	5	-	5	5	51X	-	-	-	-	5	-	8	5 61
Nodular Cast Iron	61	-	61	61	51	-	-	-	-	61	-	5	61
Stellite	-	61X 33	22	22	61	-	-	-	-	-	-	-	61
Timken	8 61	33	-	-	-	-	-	-	-	-	-	33	8 61
Titanium	23	-	33	33	23	-	-	-	-	33	-	8 33	8
Tungsten Carbide	-	-	-	-	71	-	-	-	-	-	-	-	-
Monel-Metal	8	-	8	8	51	-	-	-	-	8	-	8	8 61
Chrome Plate	-	-	-	-	51	-	-	-	-	-	-	-	-
Silver	960	-	5	5	-	-	-	-	-	-	-	-	960
Copper	5	-	61	61	-	-	-	-	-	-	-	5	5 61

TABLE 6-10. BLENDING CHART

BLEND SYMBOL NUMBER	BASE NUMBER												
	OB	10	20	30	40	50	60	70	950	960	971	Water	Wax
2	1										2		
4	1										4		
5	1									24			
8	1										8		
22	1		3										
23					1						3		
33				1							2		
51							1					60	
61							1					30	
82					1				8				
84	1								3		2		
51X						1						20	
61X							1					10	
71								1				100	
536		10%											90%
Mist Coolant							1					100	

TABLE 6-11. MATERIALS IDENTIFICATION AND SOURCES OF SUPPLY

Base Number	Type	Brand Name	Vendor
OB	Sulphurized Sperm Oil	Swoco 10SX Base	Smith-Weimahn Company 15 Moore Street New York, New York
		Steadco Base No. 90	F.W. Steadman Co., Inc. 95 Broad New York, New York
10	Lard Oil	No. 1 Prime FFH Lard Oil	American Oil and Supply Company 239 Wilson Avenue Newark, N.J. 07105
20	Sulphur Chlorinated Fatty Mineral Oil	Thread-Kut No. 99-1A	D.A. Stuart Oil Company Ltd. 2727 South Troy Street Chicago, Illinois
		Cut Max 129	E.F. Houghton and Company 305 West Lehigh Avenue Philadelphia 33, Pennsylvania
		NY-2524	Sinclair Oil Company 155.West 44th Street New York, New York
30	Sulphur Chlorinated Fatty Mineral Oil	Super Rite Base	D.A. Stuart Oil Company Ltd. 2727 South Troy Street Chicago, Illinois
		Habcool No. 318	H and B Petroleum Company 799 East 25th Street Paterson, New Jersey
		Quaker Kut 526	Quaker Chemical Products Comp. Thor and Bemoliel Streets Conshohoken, Pennsylvania
40	Fatty Chlorinated Mineral Oil	Dascolene L-2610	D.A. Stuart Oil Company Ltd. 2727 South Troy Street Chicago, Illinois
		Quaker 67-42M	Quaker Chemical Products Corp. Thor and Bemoliel Streets Conshohoken, Pennsylvania
50	Fatty, Grinding Compound	Economy Grinding Paste	The White and Bagley Company Foster and Holland Streets Worcester, Massachusetts

TABLE 6-11. MATERIALS IDENTIFICATION AND SOURCES OF SUPPLY (Cont'd)

Base Number	Type	Brand Name	Vendor
60	Semi-Synthetic Soluble Compound	Micronul No. 50	Quaker Chemical Products Corp. Thor and Bemoliel Streets Conshohoken, Pennsylvania
		Pemaco 50	Pemaco Incorporated 5989 District Boulevard Los Angeles, California
70	Nitrite Base	H1-D-106	D.A. Stuart Oil Company Ltd. 2727 South Troy Street Chicago, Illinois
		Ammine	Swan-Michigan Oil Company 39 Zabriskie Avenue Bayonne, New Jersey
536	Wax	Wax Pellets	Industrial Emulsions Company 82 Washington Avenue Nutley, New Jersey
950	Kerosene	Kerosene 950	Standard Oil Company of New Jersey Humble Oil and Refining Company 500 North Broad Street Elizabeth, New Jersey
		Kerosene 950	Sun Oil Company Walnut and 16th Street Philadelphia, Pennsylvania 19103
		Kerosene 950	Shell Oil Company 50 West 50th Street New York, New York
		Kerosene-Mobile	Mobil Oil Company, Inc. 150 East 42nd Street New York, New York
960	Mineral Seal Oil	Mineral Seal	Standard Oil Company of New Jersey Humble Oil and Refining Company 500 North Broad Street Elizabeth, New Jersey
	Mineral Seal	Mineral Seal	Texaco, Incorporated 135 East 42nd Street New York, New York

TABLE 6-11. MATERIALS IDENTIFICATION AND SOURCES OF SUPPLY (Cont'd)

Base Number	Type	Brand Name	Vendor
		Mineral Seal	Gulf Oil Company Gulf Building Pittsburgh, Pennsylvania
		Pella 911	Shell Oil Company 50 West 50th Street New York, New York
		Cartrex 1102	Mobil Oil Company, Inc. 150 East 42nd Street New York, New York
971	Light Blending Oil	Sanicut 3B	Sun Oil Company Walnut and 16th Street Philadelphia, Pennsylvania
		Carnea-21 Napthenic	Shell Oil Company 50 West 50th Street New York, New York

6-206. MISCELLANEOUS STUD REPLACEMENT. (See tool group 84.)

6-207. Pilot Drill Broken Studs. Using jig, drill a pilot hole in the stud with drill. Do not drill into the bottom of any blind hole.

6-208. Second Drill for 7/16 Inch Diameter and Larger Broken Studs. Redrill pilot hole using drill.

6-209. Finish Drill Broken Studs. Redrill the hole in the stud using the proper drill for the stud being removed. Refer to the following list for proper drill size. Do not drill into the bottom of a blind hole.

Drill	Stud Size
No. 19, 0.166 in. dia.	1/4 in. dia.
No. 3, 0.213 in. dia.	5/16 in. dia.
1/4 in. dia. by 4 in. long	3/8 in. dia.
9/32 in. dia. by 4-1/4 in. long	7/16 in. dia.
5/16 in. dia.	1/2 in. dia.
3/8 in. dia.	9/16 in. dia.

6-210. Remove Broken Studs. Select a suitable extractor for the size of the stud being removed and drive into the drilled hole in the stud. Use a suitable standard tap wrench for removing the stud.

6-211. Remove Bent or Damaged Studs. Place the proper adapter (1, figure 6-30) in the stud remover (2). Place this adapter on the stud being removed and drive down over the threads as shown. Then remove the stud by turning the stud remover with a wrench. If the threads in the case pickup and the stud remover cannot be turned, remove the stud remover from the adapter. Place the stud remover block (4) on the adapter. Screw a suitable puller (3) into the stud remover block and remove the adapter from the stud. Cut off stud close to case and remove stud as directed in previous operations for broken studs.

6-212. Retap for New Studs. When replacing a stud with another stud of the same size, run proper size tap into the hole to clean up threads without removing any metal. When retapping for

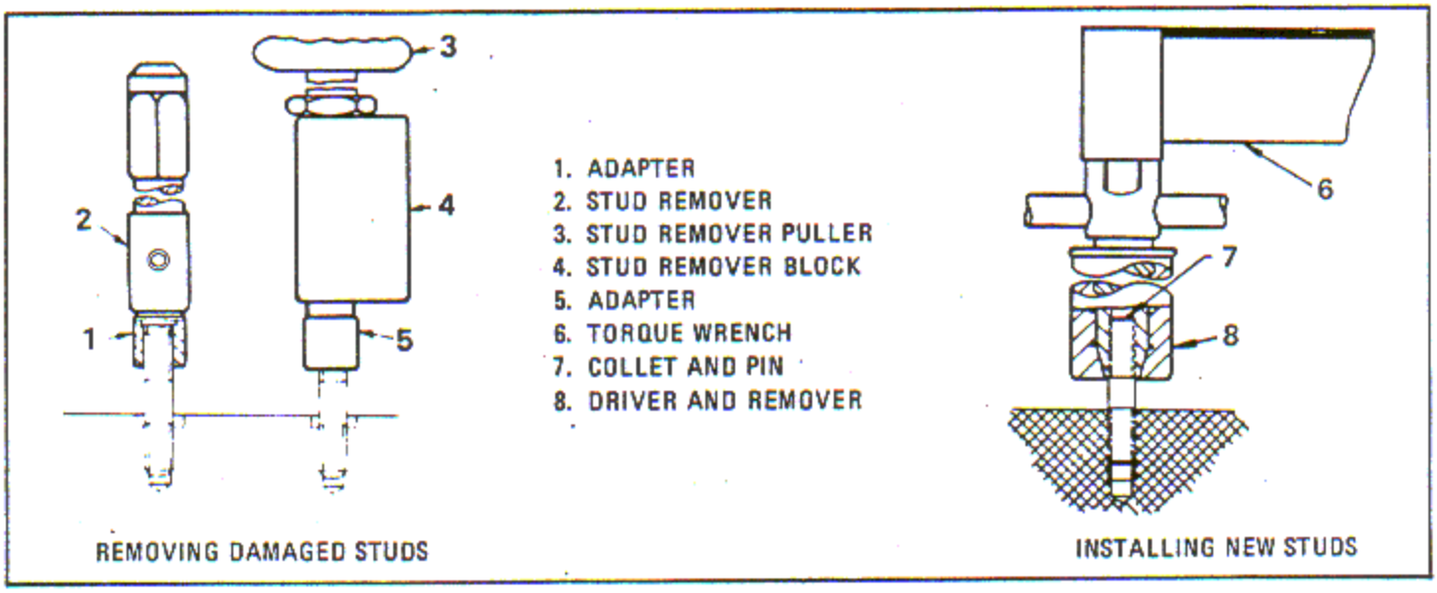

Figure 6-30. Removing Bent or Damaged Studs and Installing New Studs

next oversize stud, use proper tap selected from the list. Tap hole using proper lubricant indicated in paragraph 6-197.

Standard and Oversize Taps

Stud Thd Inch	1/4 20 Tap	5/16 18 Tap	3/8 16 Tap	7/16 14 Tap	1/2 13 Tap	9/16 12 Tap
Standard	A	A	A	A	A	A
0.003 OS	B	B	B	B	B	B
0.006 OS	C	C	C	C	C	C
0.007 OS	D	D	D	D	D	D
0.009 OS	E	E	E	E	E	E
0.012 OS	F	F	F	F	F	F

6-213. Install New Studs.

CAUTION

Unless otherwise specified, anti-seize compound composed of (by weight) 75 per cent petrolatum, melting point 49 - 60°C (120 - 140°F) and 25 per cent graphite, powdered flake, (Industrial Emulsions Co., Nutley, N.J.), or equivalent shall be applied to male threads. Excessive amounts of lubricant shall be avoided. Use only sufficient lubricant to cover the threads with a thin layer.

a. Select the proper size stud and install with the proper driver. See figure 6-30.

b. Use torque wrench to determine the correct torque at the required height. Refer to the Table of Tightening Torque Values, Section IX. If the correct torque is not obtained at required stud height, remove the stud and select another stud.

NOTE

Use adapter when installing supercharger rear cover to oil pump studs.

6-214. HEXAGON HEAD SCREW BUSHINGS REPLACEMENT. (See tool group 60.)

6-215. Remove Hexagon Head Bushing. Force applicable removing tool into the bushing to a depth of 3/8 inch. Remove the bushing by unscrewing it using a wrench on the tool square.

6-216. Retap for New Bushings. When replacing a bushing with another bushing of the same size, run the proper size tap into the hole to clean up threads without removing any metal. When retapping for the next oversize bushing, use proper size tap.

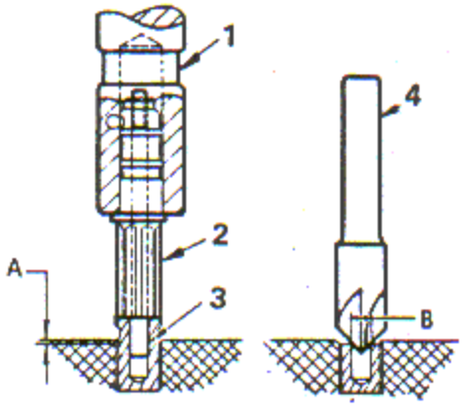

1. HOLDER
2. CUTTER
3. PILOT AND NUT
4. COUNTERSINK CUTTER

Figure 6-31. Installing New Bushing

6-217. Install New Bushing.

a. Screw hexagon head bushing into work using proper socket wrench and suitable torque wrench. A minimum driving torque as indicated in the following list must be obtained before the shoulder of the bushing contacts the pad face. If the torque is correct, drive the bushing until the shoulder contacts the pad.

Bushing Size OD	Minimum Driving Torque In/lb
5/16 - 24 thd	40
1/2 - 20 thd	100
9/16 - 18 thd	150

b. Face off the hexagon head bushing with a suitable cutter (2, figure 6-31), pilot and nut (3) and holder (1) to dimension A, which is from 0.000 - 0.003 inch below the surface of the pad.

c. Countersink the installed screw bushing using a standard countersink tool, to diameter B, which is 21/64 inch.

6-218. Retap Inside Diameter of Hexagon Head Screw Bushing. Retap the inside diameter of the hexagon head screw bushing with the proper size tap for the installed bushing.

6-219. ANTI-FRICTION BEARINGS - RECONDITIONING OF.

6-220. OUTER AND INNER RACES.

a. Superficial corrosion stains and discolorations that can be removed with crocus cloth, Federal Specification P-C-458, are acceptable without additional rework. Races of separable bearings can also be buffed using suitable buffing equipment to restore the original finish and to accentuate any defect that may be present.

b. Abrasive dressing within dimensional limits of the bearing races is permitted if the race is mounted in a magnetic chuck or similar device for accurate centering.

c. Use 400 grit or finer abrasive paper and apply form fitting pressure with the fingers to the rotating race. Since the use of the fingers will limit the temperatures obtained, overheating will be avoided.

d. Abrasive dressing will be followed by buffing to restore the original race finish. Buffing wheels shall operate at speeds in accordance with standard practices. Loose muslin disk wheels 8 - 10 inches in diameter are satisfactory for buffing larger bearings with properly applied buffing compounds.

e. Outer diameter surfaces can be polished to remove corrosion, light smearing and/or galling. Abrasives shall not be coarser than Lea polishing compound, Grade C.

f. Several smaller cloth wheels with adapter mountings are required for buffing smaller bearings. All race surfaces that have been polished shall be dimensionally inspected.

6-221. BEARING RETAINERS.

a. Little rework is required for retainers during bearing processes. Brass or bronze retainers that are severely tarnished may be restored by bright dipping operation. However, tarnish is not detrimental and retainers should not be bright dipped for decorative reasons.

b. Tarnish of silver plated surfaces is not detrimental and no reconditioning is required.

CAUTION

Conventional bright dip tanks found in most plating shops are considered too too severe for brightening bearing retainers and their use for this purpose shall be prohibited.

c. Any bright dip tank shall be completely removed from the bearing shop and retainers shall be routed for such treatment as necessary.

d. A milder solution compounded of two pounds of sulfanic acid per gallon of water, and a small amount of wetting agent is presently being successfully used. The local Materials Engineering laboratory shall be contacted for correct bright dip procedures.

6-222. ROLLING ELEMENTS.

a. In general, the rework of rolling elements is not economically feasible; however, staining, slight corrosion, and minor surface blemishes can be removed by placing the rolling elements in a tumbler with a suitable abrasive.

b. When tumbling, use an initial mixture of 400-grit or finer aluminum oxide and walnut shells for 24 hours. Follow with a finish tumbling using jeweler's rouge and shells or leather straps for 24 hours.

c. The rolling elements will then be sized in sets in accordance with NAVAIR 01-1A-503, Maintenance of Aeronautical Antifriction Bearings, paragraph 6-176A. No substitution of equipment using air measuring devices or mechanical devices (micrometers, etc.) shall be permitted. The maximum permissible variation in diameter between the largest and smallest ball in any ball bearing assembly is 0.000050 (50 millionths of an inch).

6-223. WELDING OF ENGINE PARTS.

CAUTION

Do not weld cylinder heads in any location other than those specified.

6-224. The following engine parts, when worn, cracked or where material build-up is required may be reconditioned by welding: intake pipes, push rod housings, fireseal adapters and cylinder air deflectors. It is also permissible to weld cylinder heads at the rocker box cover parting surfaces to repair mutilation and to build-up cowl attaching stud bosses. Heat treatment after welding is not necessary.

6-225. CRANKCASE FRONT SECTION - REWORK TO PREVENT CRACKING.

6-226. Recontour the crankcase front section attaching bolt recesses on both sides of the governor mounting pad as follows:

a. Remove the puller screw hole plug adjacent to the No. 2 exhaust tappet pad and replace with a short Allen socket head 0.3125 x 18 set screw.

b. Protect the attaching bolt spot faces.

c. Recontour the areas shown in figure 6-32, using a double cut olive shape 1/4 inch shank midget mill mounted in a suitable hand grinder.

d. Remove the triangular shaped areas, and the raised sections around the attaching bolt spot faces as flush as possible. See figure 6-32.

CAUTION

Do not cut into the spot faces.

e. Blend the recontoured areas into the contour of the crankcase front section, using a No. 80 grit half spiral abrasive roll mounted on a mandrel in a suitable hand grinder.

f. With successively finer grit (120 - 240) remove all tool marks, polish the recontoured areas and radius the outside edge and around the puller screw hole. Use a B52 FAM-TEX, or equivalent, mounted wheel for the small, close areas.

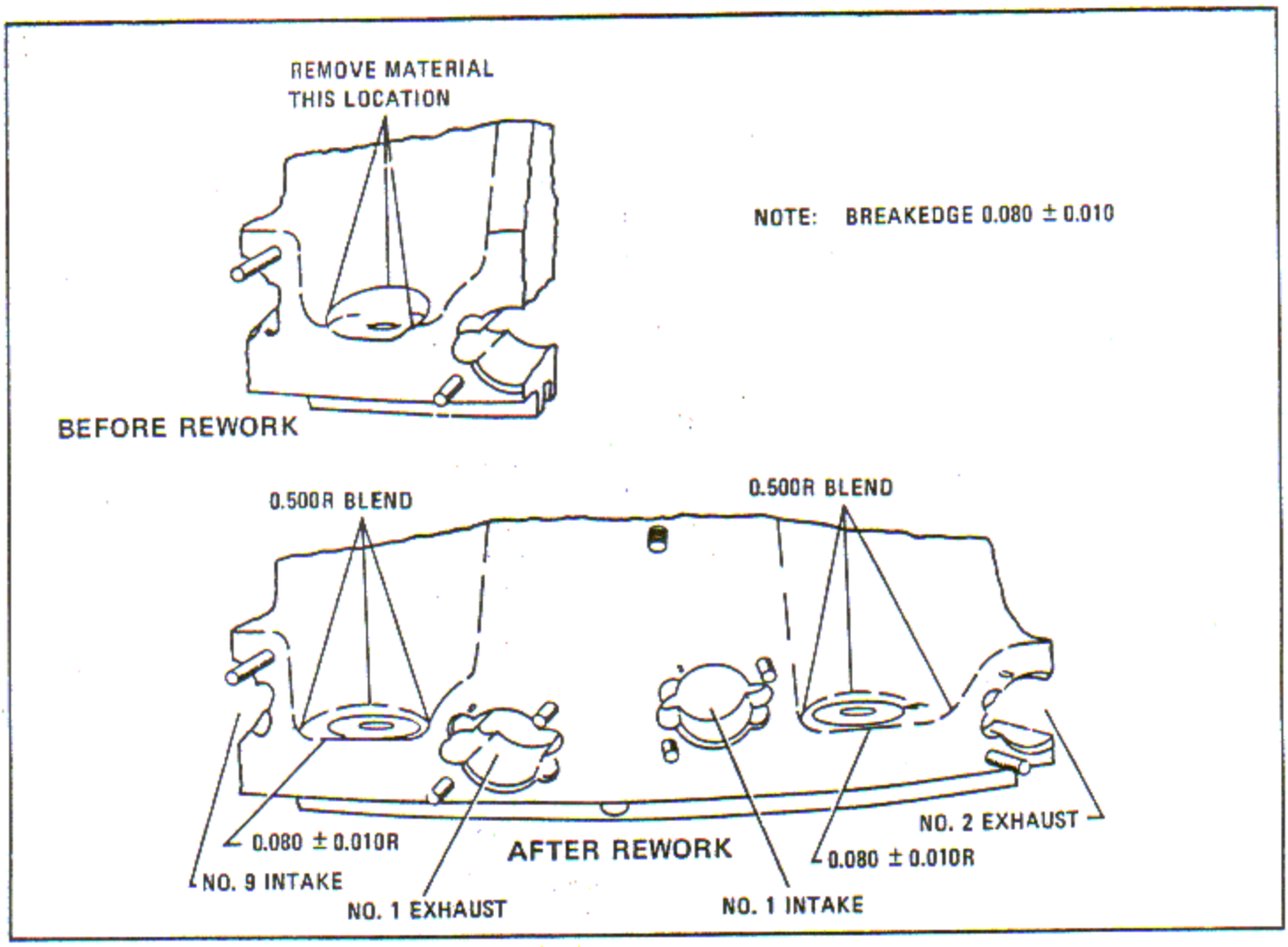

Figure 6-32. Crankcase Front Section - Rework to Prevent Cracking

NOTE

Reworked areas are to have a 15 microinch RMS finish, or better, with all abrupt and sharp edges eliminated.

g. Remove the Allen socket head set screw and re-install the puller screw hole plug.

h. Chrome pickle touch up the reworked areas in accordance with standard practice. Paint chrome pickled areas with a suitable engine enamel.

6-227. CRANKCASE FRONT SECTION ATTACHING BOLT HOLE REPAIR. During overhaul of crankcase front section, machine a 0.020 inch breakedge at the intersection of the crankcase attaching bolt holes (ID) and the washer surface.

6-228. CRANKCASE FRONT SECTION TO CRANKCASE MAIN SECTION BOLT HOLE SPOTFACES. Spotfaces that are damaged can be reconditioned as follows:

NOTE

Only rework bosses that have been specifically designated for repair because of chipping, dishing or other extensive damage.

a. Remove material only as required to clean up damaged surfaces. Refer to following list for removal limits. Approximately 90 percent spotface clean up will be considered satisfactory.

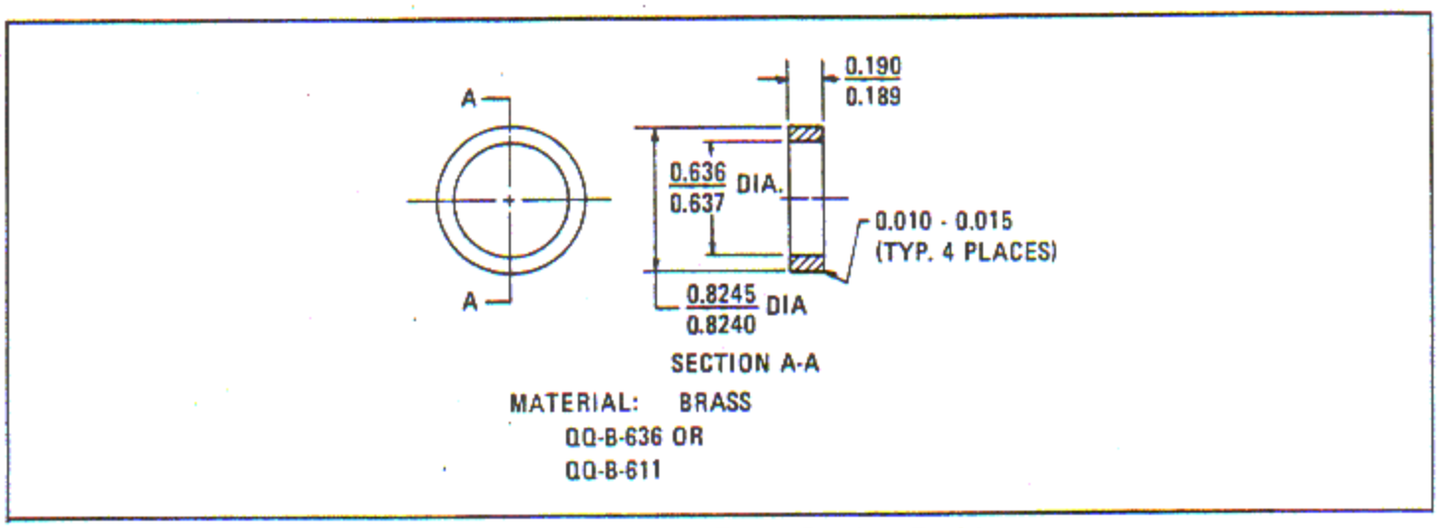

Figure 6-33. Crankcase Front Section Bushing

Original Boss Length	Boss Length Limit After Rework
1.00 inch	0.90 inch
2.00 inches	1.90 inches
2.62 inches	2.52 inches

b. Spotface reworked bosses to 1.24 - 1.26 inches diameter with a 0.080 - 0.100 inch radius in the corner.

NOTE

When reworking either of the two bottom bosses, spotface to 1.37 - 1.39 inches diameter with a 0.17 - 0.19 inch corner radius.

c. Treat reworked surfaces in accordance with existing instructions.

6-229. CRANKCASE FRONT SECTION OIL TRANSFER DOWEL, OIL SEAL RING, SEATING SURFACE REPAIR.

6-229A. Damaged Oil Seal Ring Seating Surface Repair.

a. Counterbore the defective locations to an ID of 0.8235 - 0.8240 inch and a depth of 0.187 - 0.188 inch. Make radius on ID at base of counterbore 0.005 - 0.010 inch. Break sharp edges 0.01 - 0.03 inch approximate radius.

b. After machining case, chrome pickle treat in accordance with paragraph 6-900.

c. Manufacture bushing in accordance with the requirements of figure 6-33.

d. Apply sealing compound, MIL-S-22473D, Grade AA, to the counterbore and install the bushings to their full depth.

e. Finish the bushings flush with the original ID and the original mating surface, if required.

6-230. PROPELLER SHAFT THRUST BEARING RETAINER REPLACEMENT. (See tool group 105.)

6-231. Remove Retainer.

a. Place the crankcase front section, nose up, on a bench. Heat the outer surface adjacent to the thrust bearing retainer to 120°C (250°F) using nozzle. Use temperature gage to determine the correct temperature.

b. Use a 1/2-13 thread bolt as a handle and insert removing tool (2, figure 6-34) in the front section. Drive out the retainer with a bar (1) and hammer. Apply blows, if necessary, near the edges of the tool so that the retainer does not tilt as it is being driven out. See figure 6-34.

6-232. Remove Dowel Pin. Place jig (4, figure 6-34) on the crankcase front section so that the fork of the jig fully engages the dowel pin. Secure the jig in this position by adjusting the jig bolt (5) snugly against the counterbore in the

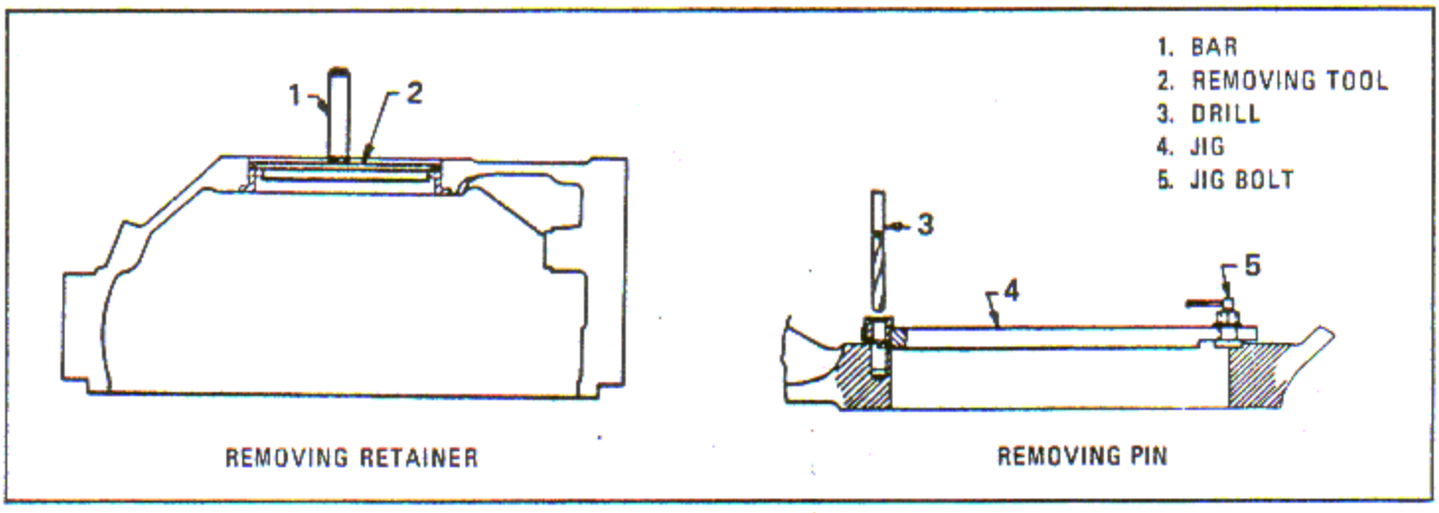

Figure 6-34. Removing Retainer and Dowell Pin

crankcase. Clamp the bolt tightly. Drill through pin only, using 19/64 inch diameter drill (3, figure 6-34). Pick out remainder of pin.

6-233. Bore and Counterbore Crankcase for Oversize Retainer.

a. Plug all oil holes and passages with beeswax or paraffin, Federal Specifications C-B-191 and VV-W-95 respectively.

b. Mount fixture (1, figure 6-35) to a suitable lathe faceplate (2). Indicate the pilot to run true within 0.001 inch full indicator reading and clamp securely. Clamp crankcase front section lightly to the fixture. Indicate surface G to run true within 0.0005 inch full indicator reading. Shims up to 0.010 inch may be required between the fixture and the thrust cover mounting surface to indicate surface G within 0.0005 inch full indicator reading. Clamp crankcase front section securely to the fixture.

c. Machine the retainer bore to dimensions A to F inclusive for the oversize required. Refer to the list following this step for applicable size. Use a spindle speed of approximately 200 rpm with a 0.006 inch feed per revolution. No coolant is required. The required surface finish of the bored hole is 32 microinches rms or better. Check the dimensions with an inside micrometer set with an outside micrometer or with a vernier depth gage as required.

OS Outside Dia	OS Flange Thick.	A ±0.001	B ±0.005	C ±0.001
0.010	0.020	0.146	0.020	7.291
0.020	0.040	0.166	0.020	7.301
0.030	0.050	0.176	0.020	7.311
0.040	0.060	0.186	0.020	7.321
0.050	0.070	0.196	0.020	7.331
0.060	0.075	0.201	0.020	7.341
0.070	0.080	0.206	0.020	7.351

OS Outside Dia	OS Flange Thick.	D ±0.010	E ±1°	F ±0.010
0.010	0.020	1.087	45°	7.410
0.020	0.040	1.087	45°	7.420
0.030	0.050	1.087	45°	7.430
0.040	0.060	1.087	45°	7.440
0.050	0.070	1.087	45°	7.450
0.060	0.075	1.087	45°	7.460
0.070	0.080	1.087	45°	7.470

NOTE

All limits must be held. Limits for radius B are not to be exceeded. The diameter of the bore should be held for its full depth D, at which point it is to be blended into the original bore.

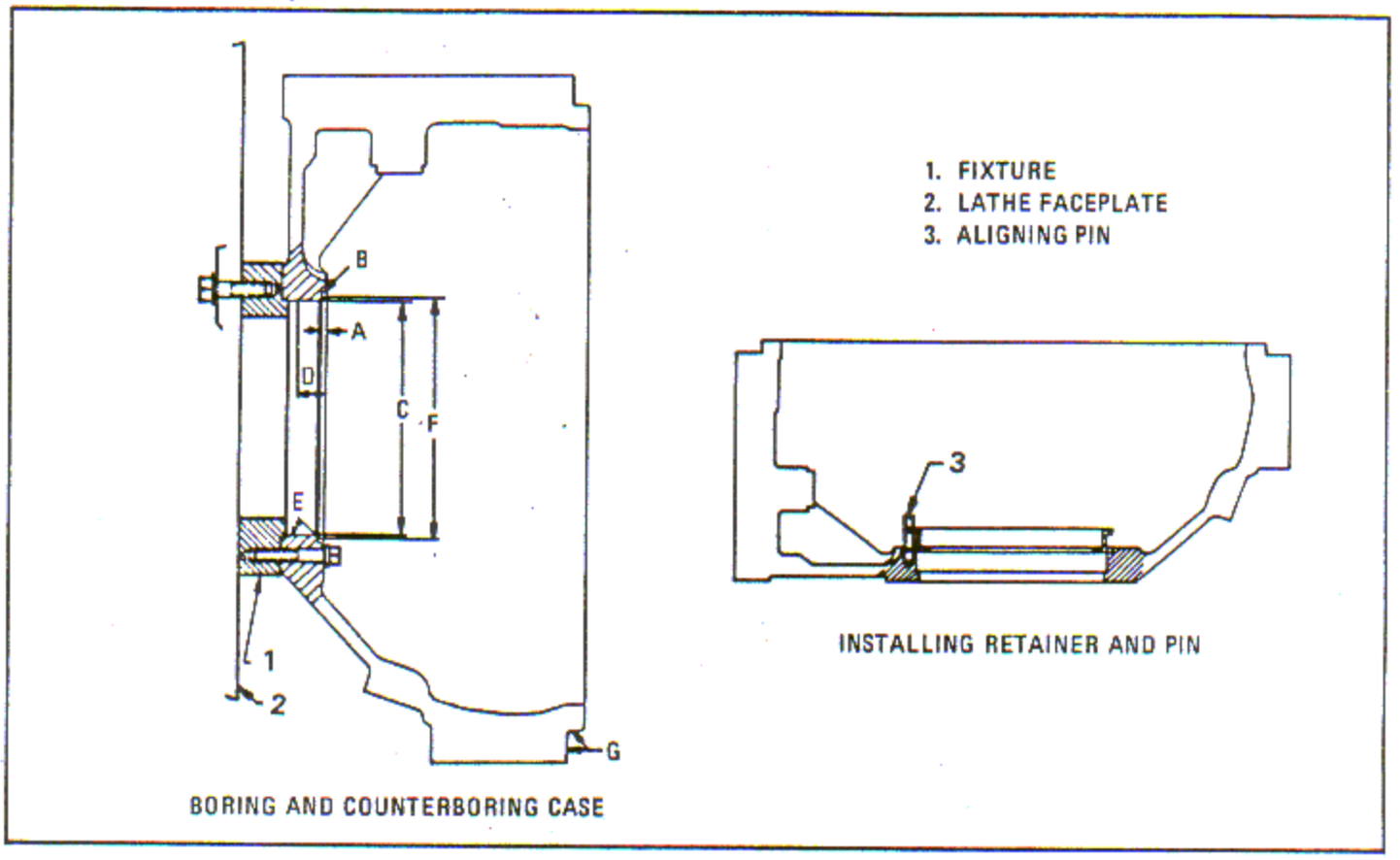

Figure 6-35. Boring Base for Oversize Retainer and Installing Retainer and Dowel Pin

d. Dewax the crankcase front section by heating to 135°C (275°F). Blow out with kerosene, Federal Specification VV-K-211, heated to 49°C (120°F) maximum with approximately 20 pounds of pressure.

6-234. Install Retainer and Dowel Pin.

a. Chill thrust bearing retainer to -57°C (-70°F) using standard shop practices.

b. Heat the outer surface of the crankcase adjacent to the retainer bore to 120°C (250°F) using nozzle. Check the temperature with temperature gage.

c. Support the crankcase front section, nose down, on wood parallels placed on a bench or the floor. Insert a 5/16 inch diameter aligning bar, approximately two inches long, in a dowel pin hole in the crankcase .

d. Insert the thrust bearing retainer in the crankcase front section with the bar engaging the retainer flange slot. Press the retainer down firmly on the face of the case and immediately remove the bar and drive the dowel pin (3, figure 6-35) in about half way. Continue to press down on the retainer flange until the retainer is tight in the case. Drive the pin to full depth so that the top of the pin is 0.010 - 0.030 inch below the outer face of the retainer flange.

e. When the crankcase front section is just warm, check with a suitable feeler gage to determine if the retainer flange is contacting the case all the way around. If it is not, tap the flange lightly with a babbit hammer until proper contact is made.

6-235. Grind Bore and Inner Flange Face of Retainer.

a. Plug all the oil holes and passages with beeswax or paraffin. Mount fixture (1, figure 6-36) to the faceplate (2) of a suitable internal grinding machine. Indicate the pilot of the fixture to run true within 0.001 inch full indicator reading and clamp securely. Clamp the crankcase front section lightly to the fixture. Indicate surfaces K to run true within 0.0005 inch full indicator reading and

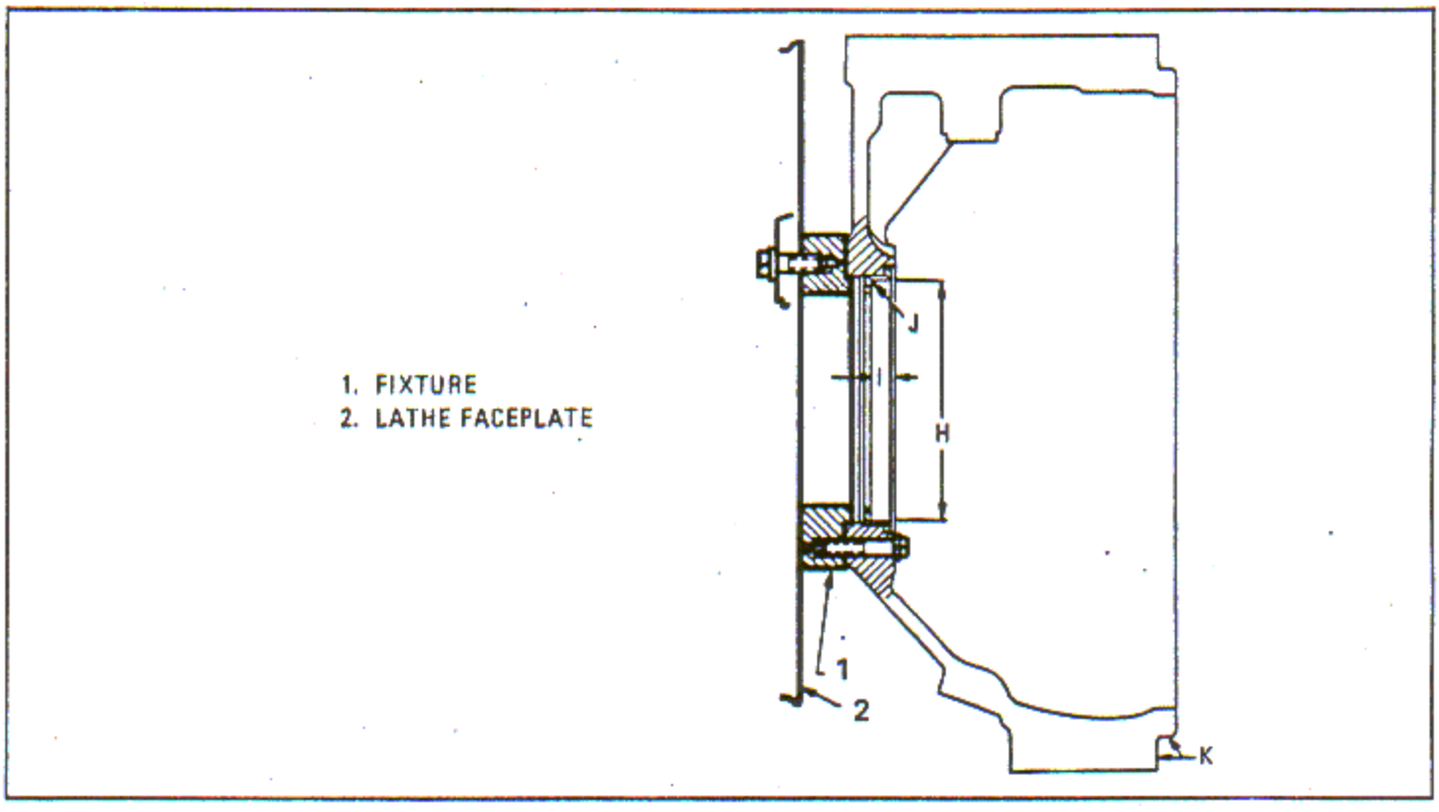

Figure 6-36. Grinding Bore and Inner Flange Face of Retainer

clamp the case securely to the fixture. Shims up to 0.010 inch may be required between the fixture and the thrust cover mounting surface to indicate surface K within 0.0005 inch full indicator reading.

b. Grind bore H as close to the minimum limit of 7.0880 - 7.0885 inches as possible to allow near limit fit and maximum life expectancy. Grind radius J to 0.030 - 0.060 inch and the inner flange face to dimension I which is 0.8473 - 0.8493 inch. Employ a Cincinnati 4A60-16-VL775-Y, 6 x 3 x 2-1/2 inch grinding wheel (Cincinnati Milling Machine Co., Cincinnati 9, Ohio, or equivalent), a wheel speed of 2500 rpm, a spindle speed of 120 rpm, a hand feed and a liberal flow of coolant blend No. 51. Maintain a surface finish of 32 microinches rms or better on the ground bore and liner face.

c. Check dimensions with an inside micrometer set with an outside micrometer or vernier depth gage, as required.

d. Dewax the crankcase front section by heating to 135°C (275°F). Blow out with kerosene, Federal Specification VV-K-211, heated to 40°C (120°F) maximum with approximately 20 pounds of pressure.

6-236. CRANKCASE FRONT SECTION STATIONARY REDUCTION GEAR SEATING SURFACE.

6-236A. When the stationary reduction gear seating surface is damaged, the crankcase front section may be repaired as follows:

a. Remove the minimum amount of material from the reduction gear seating surface necessary to clean up the surface. A maximum of 0.015 inch material may be removed. Maximum dimension from the crankcase front section rear mating surface to the reduction gear seating surface is 7.432 inches.

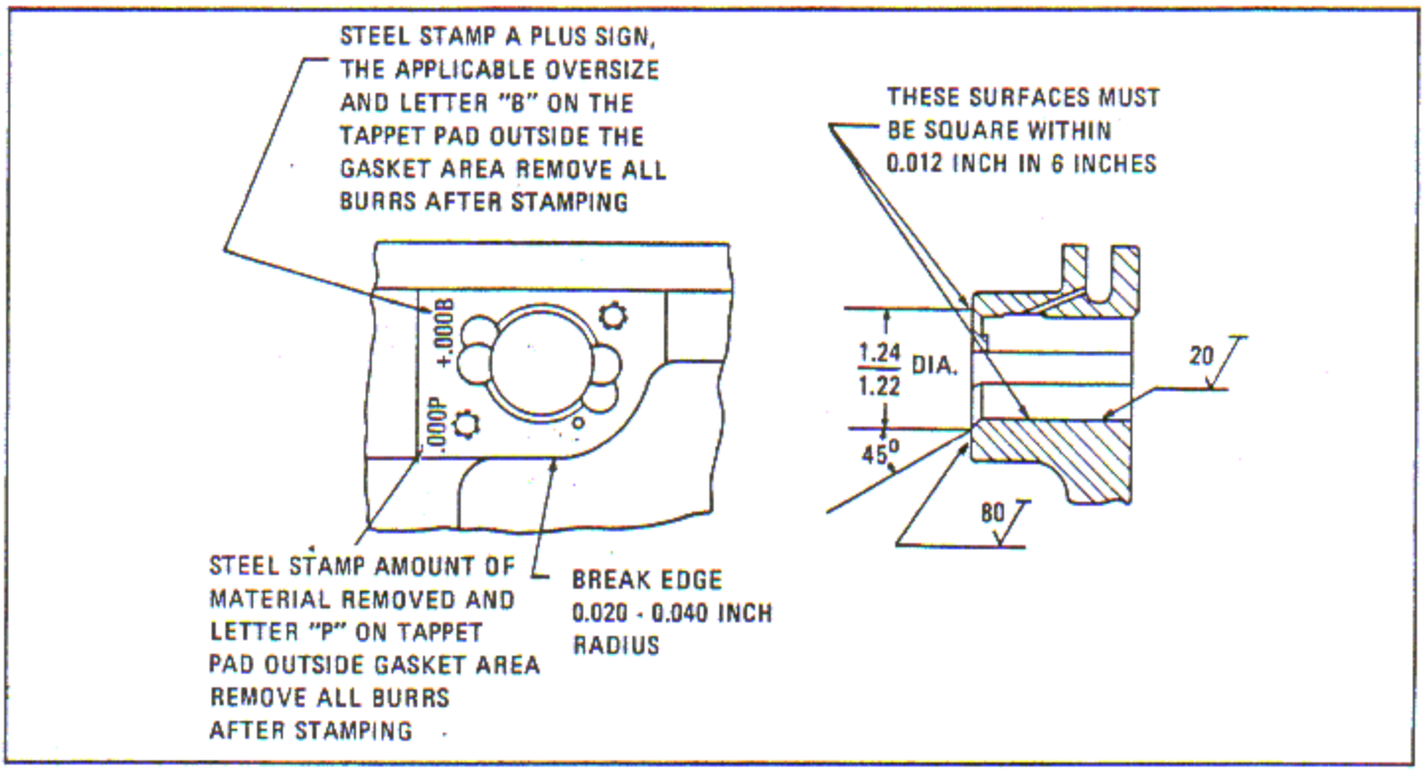

Figure 6-37. Oversize Valve Tappet Guide Bore Identification

b. Select a thrust bearing retainer that will require removal of a minimum of material from the retainer seating surface. The rear surface of the retainer must be 0.001 - 0.009 inch below the adjacent reduction gear seating surface.

6-237. CRANKCASE FRONT SECTION VALVE TAPPET GUIDE OD AND HOUSING GUIDE BORES - RECONDITIONING. (See tool group 17.)

6-238. Resurface Valve Tappet Guide Pad.

NOTE

Incorporate this instruction only as necessary to recondition pad surfaces exhibiting galling and/or chafing.

a. Remove the studs and locating pin from each pad requiring resurfacing, employing standard machine shop practices.

b. Set up the crankcase front section on the table of a suitable boring mill or radial drill press. Square the tappet pad with the spindle to maintain a squareness relationship within 0.012 inch in six inches between the pad and guide bore as shown in figure 6-37. Utilize the unworn surface of the pad for set up. Install a suitable 2-3/4 inch diameter end mill, incorporating a 0.120 - 0.180 inch radius.

c. Employing standard shop practice, machine the entire surface of the pad to clean up. A maximum of 0.015 inch of stock removal is permissible. A surface finish of 80 microinches rms or better is required.

d. Identify the amount of material removed from the pad by stamping the amount removed on the housing adjacent to the pad or pads involved, and the letter P as a suffix to the amount removed from the pad as shown in figure 6-37.

e. Provide a 1.220 - 1.240 inch diameter chamfer using a 90 degree included angle countersink. Break sharp edges on the pad 0.005 - 0.015 inch approximate radius. Restore the 0.020 - 0.040 inch radius at the outer edges of the reworked pad.

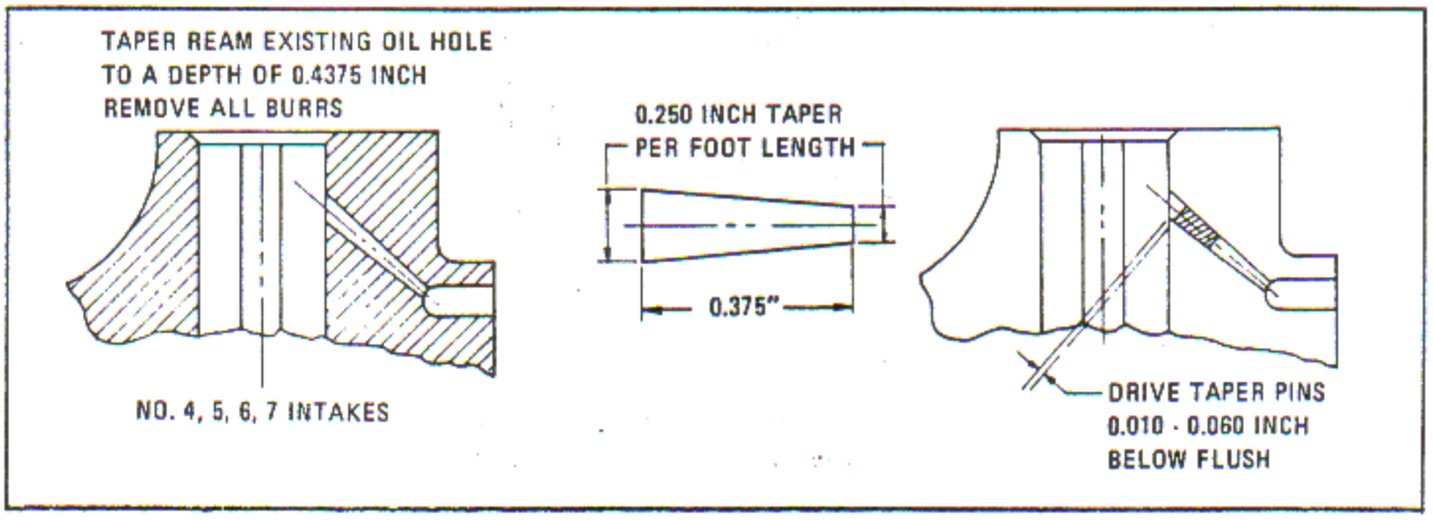

Figure 6-38. Intake Tappet Guide Oil Feed Hole Plug Installation

f. Restore the corrosion protection to the surfaces from which the original dichromate had been removed by local chrome pickling of the exposed surfaces in accordance with paragraph 6-899.

NOTE

If the valve tappet guide bore requires machining, complete steps g and h after the bore has been machined.

g. Install the locating pin in the pad. The pin is to protrude 0.250 - 0.260 inch from the pad surface.

h. Install the studs in the pad employing standard machine shop practice. Torque studs to 50 -95 inch-pounds. Studs are to protrude 0.810 - 0.830 inch from the surface of the pad.

6-239. Plugging of Intake Valve Tappet Guide Bore Oil Feed Holes. Existing oil feed holes in the No. 4, 5, 6 and 7 intake valve tappet guide bores may be plugged as follows:

a. Ream the existing oil feed holes to a depth of 0.4375 inch using a number 3/0 (0.1302 - 0.1029) inch taper pin reamer held in a tee handle tap wrench. See figure 6-38.

b. Clean the taper holes of all burrs.

c. Manufacture number 3/0 taper pins from 2024T4 material.

d. Install the taper pins. Drive the pins 0.010 - 0.060 inch below flush.

NOTE

The taper pins have a tendency to spread at the driven end therefore no staking will be required.

6-240. Ream Valve Guide Tappet Bore.

a. Determine the amount of wear and bell-mouthing of the bore using a dial bore gage. See figure 6-39.

b. If the amount of wear and bell-mouthing is in excess of 0.0015 inch above the blueprint diameter of 1.062 - 1.063 inches, but not in excess of 0.0025 inch, it is not necessary to rework the bore. Copper plate the valve guide in accordance with paragraph 6-242 and figure 6-39.

c. Bores which are in excess of 0.0025 inch above blueprint, but under 0.0035 inch are to be reamed to 1.065 - 1.066 inches diameter using reamer. Maintain a 20 microinch rms finish or better. Install a 0.003 inch oversize valve guide. The ID at the outer end of the guide bore will be the determining factor in establishing plating thickness. Maintain required fit between guide bore and guide.

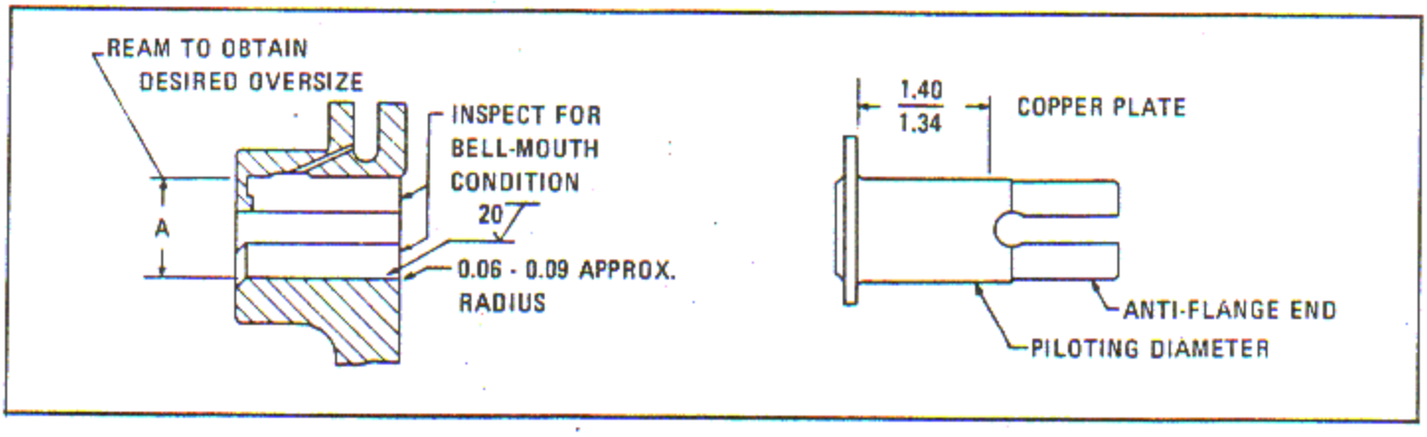

Figure 6-39. Valve Tappet Guide Copper Plated Areas

d. Bores which are in excess of 0.0035 inch above blueprint, but under 0.0045 inch, are to be reamed to 1.068 - 1.069 inches using reamer. Install a 0.006 inch oversize guide.

e. Bores which are in excess of 0.0045 inch above blueprint, but under 0.0070 inch, are to be reamed to 1.072 - 1.073 inches using reamer. Install a 0.010 inch oversize guide.

f. Guide bores which do not clean up under the above conditions may be reamed to a maximum diameter of 1.082 - 1.083 inches using reamer. Install appropriate chrome plated oversize guide as reworked in accordance with paragraphs 6-241 and 6-242. Use the following oversizes as a guide for steps c, d, e. and f.

Guide Bore Oversize	Guide Bore Diameter
Standard	1.0620 - 1.0630
+0.003	1.0650 - 1.0660
+0.006	1.0680 - 1.0690
+0.010	1.0720 - 1.0730
+0.020	1.0820 - 1.0830

g. Check the guide bores with the applicable plug gage.

NOTE

It is permissible, during subsequent overhaul, to copper plate oversize guides in accordance with paragraph 6-242 to obtain the proper fit, where possible, without reworking the guide bore.

h. Restore the 0.060 - 0.090 inch radius on the tappet guide bore ID by using emery cloth, Federal Specification P-C-458 and finishing with emery cloth, Federal Specification P-C-451. Remove sharp edges at the outer end of the bore, if necessary. All reworked require a 20 microinch rms finish or better.

i. Restore the corrosion protection to the surface from which the original dichromate has been removed by local chrome pickling of the exposed surface in accordance with paragraph 6-899.

j. Reidentify valve tappet guide bore by steel stamping a plus sign, the applicable oversize and the letter B as a suffix (to represent tappet bore) at the location indicated in figure 6-37.

6-241. CHROME PLATE VALVE TAPPET GUIDES.

a. Chrome plate the guides, when necessary to obtain the proper guide to guide bore fit, to approximately 0.010 inch over the final oversize diameter. Remove excess material in accordance with steps b through f.

b. Slip a valve tappet guide over a taper mandrel and expansion bushing.

c. Expand the bushing to provide a snug fit in the guide inside diameter. Mount the assembly between the centers of a suitable plain cylindrical grinder.

d. Rotate the part at approximately 150 rpm and the grinding wheel at approximately 11,000 surface feet per minute. Use an abrasive grinding

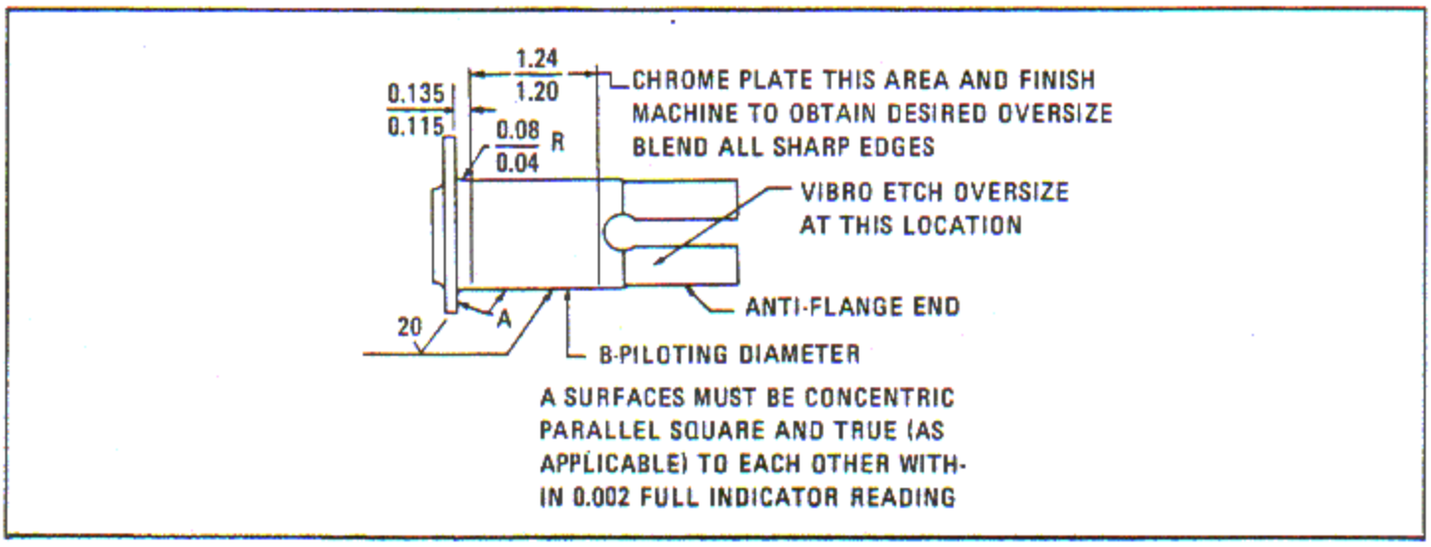

Figure 6-40. Valve Tappet Guide Chromium Plated Areas

wheel (No. 37C500-I-9E, Norton Company, 35 New Bond Street, Worcester, Massachusetts, or equivalent). Use a suitable coolant and a light hand feed.

e. The newly ground diameter B shall be square to the shoulder within 0.002 inch full indicator reading. Finish of ground surface is to be 20 microinches rms or better. See figure 6-40.

f. Vibro-etch the outside diameter of the guide on the cadmium plated area at the outer flange and to reflect the guide oversize.

6-242. COPPER PLATING VALVE TAPPET GUIDES. When wear of the valve tappet guide bore is less than 0.0025 inch, but greater than 0.0015 inch, the proper clearance between the guide and the guide bore may be obtained by copper plating the pilot area on the outside of the guide in accordance with paragraph 6-881. When the guides are copper plated, the inside diameter at the outer end of the guide bore will be the determining factor in establishing the plating thickness. The 0.000 - 0.0015 inch clearance between the guide and guide bore, as specified in reference 47, Table of Limits, Section IX, must be adhered to.

6-243. CRANKCASE FRONT SECTION WYE TYPE HYDRO CONNECTOR (R1820-86A, -86B).

6-244. Machine Crankcase Front Section For Oversize Pipe Threaded Adapter.

a. Remove the superseded connector and adapter from the crankcase connector hole.

b. Plug all oil holes and passages with beeswax, Federal Specification C-B-191 or paraffin, Federal Specification VV-W-95.

c. Using standard machine shop practices, remachine the crankcase at the external hydro oil supply tube connector hole. See figure 6-41 and 6-42.

d. Dewax, wash and chrome pickle the reworked crankcase area.

6-245. Machine Crankcase Front Section (Crankcases not previously reworked).

a. Remove the superseded connector from the crankcase connector hole.

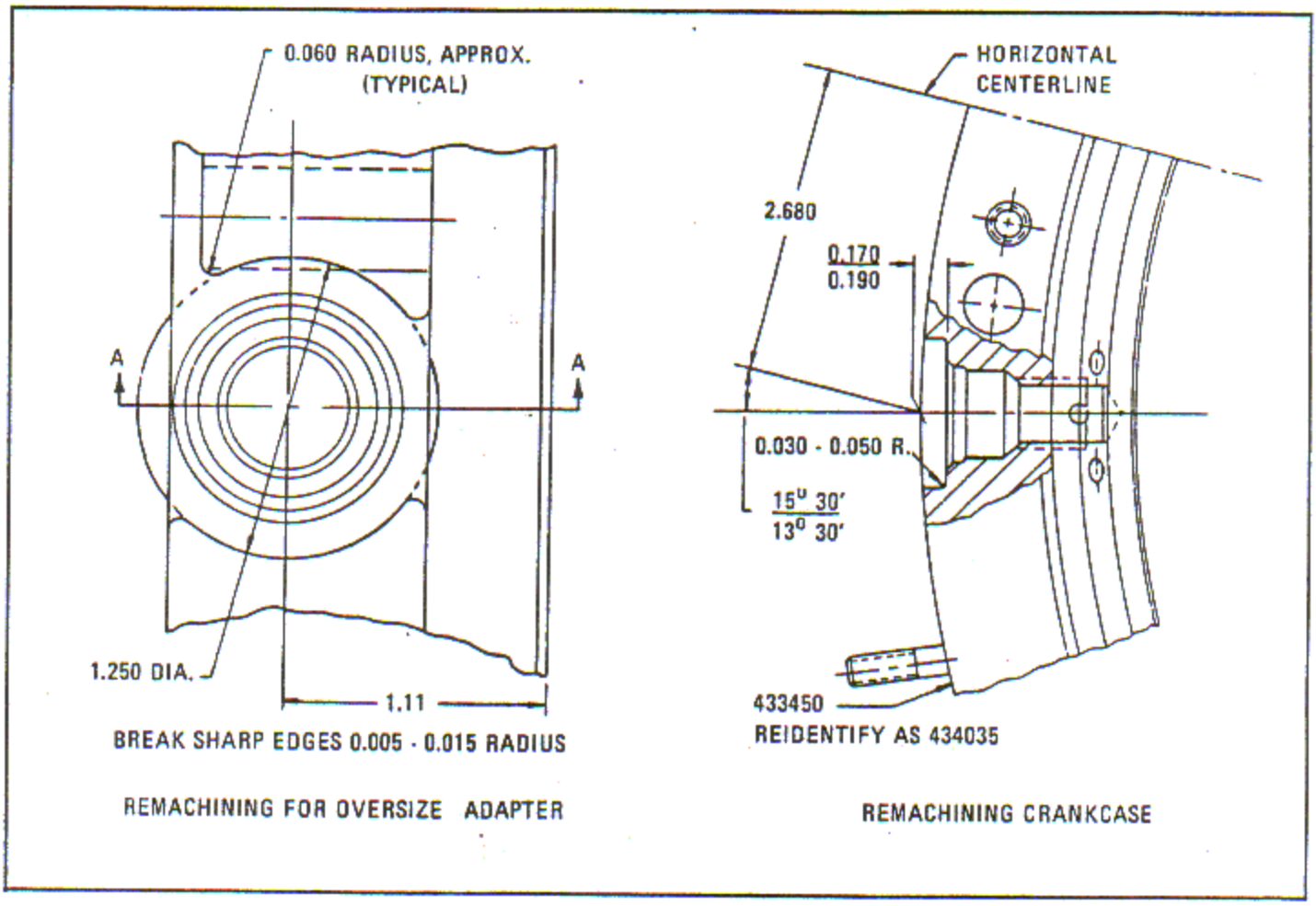

Figure 6-41. Remachining Crankcase

b. Plug all oil holes and passages with beeswax or paraffin.

c. Using standard machine shop practice, remachine the crankcase at the external hydro oil tube connector hole in accordance with figure 6-43.

d. Dewax, wash and chrome pickle the reworked crankcase areas.

6-246. Decrease Length of Hydro Oil Tube Assembly.

a. Strip the cadmium plate from the tube union cone approximately 1/2 inch of the tube adjacent to the cone.

NOTE

Rework applies to the propeller end of the tube assembly and work shall be accomplished in accordance with standard practices. See figure 6-44.

b. Mark the tube and cone to facilitate reinstallation. Heat and remove the cone from the tube assembly.

c. Scribe and cut 0.200 inch from the tube end and clean to remove all braze. Remove all sharp edges from the tube end.

d. Check the tube diameter to ensure it is 0.495 - 0.497 inch as shown in figure 6-44.

e. Clean the tube union ID to ensure a smooth slip fit and proper bottoming of the tube in the cone counterbore.

f. Reinstall the cone in place on the tube and silver braze as shown in figure 6-43.

g. Pressure test the tube assembly to 2900 psi.

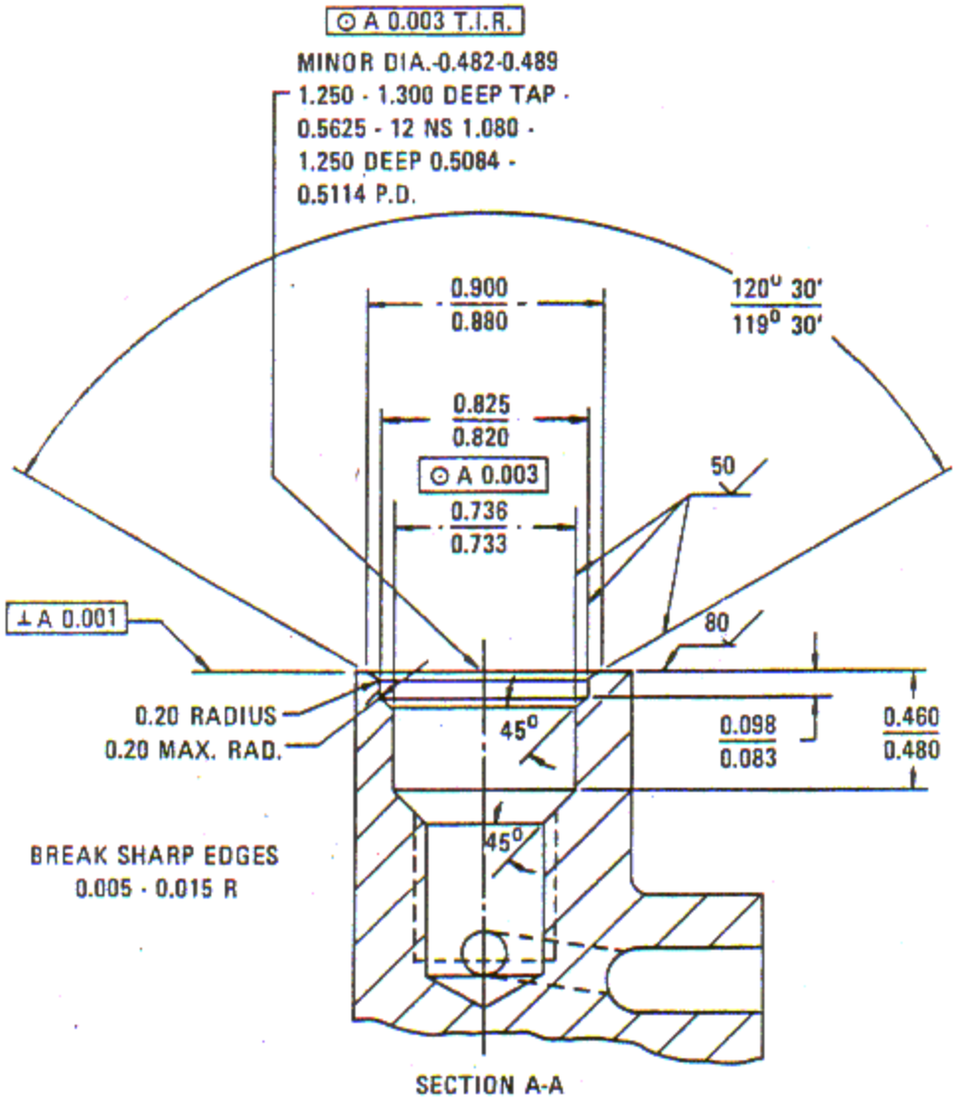

Figure 6-42. Remachining Front Crankcase

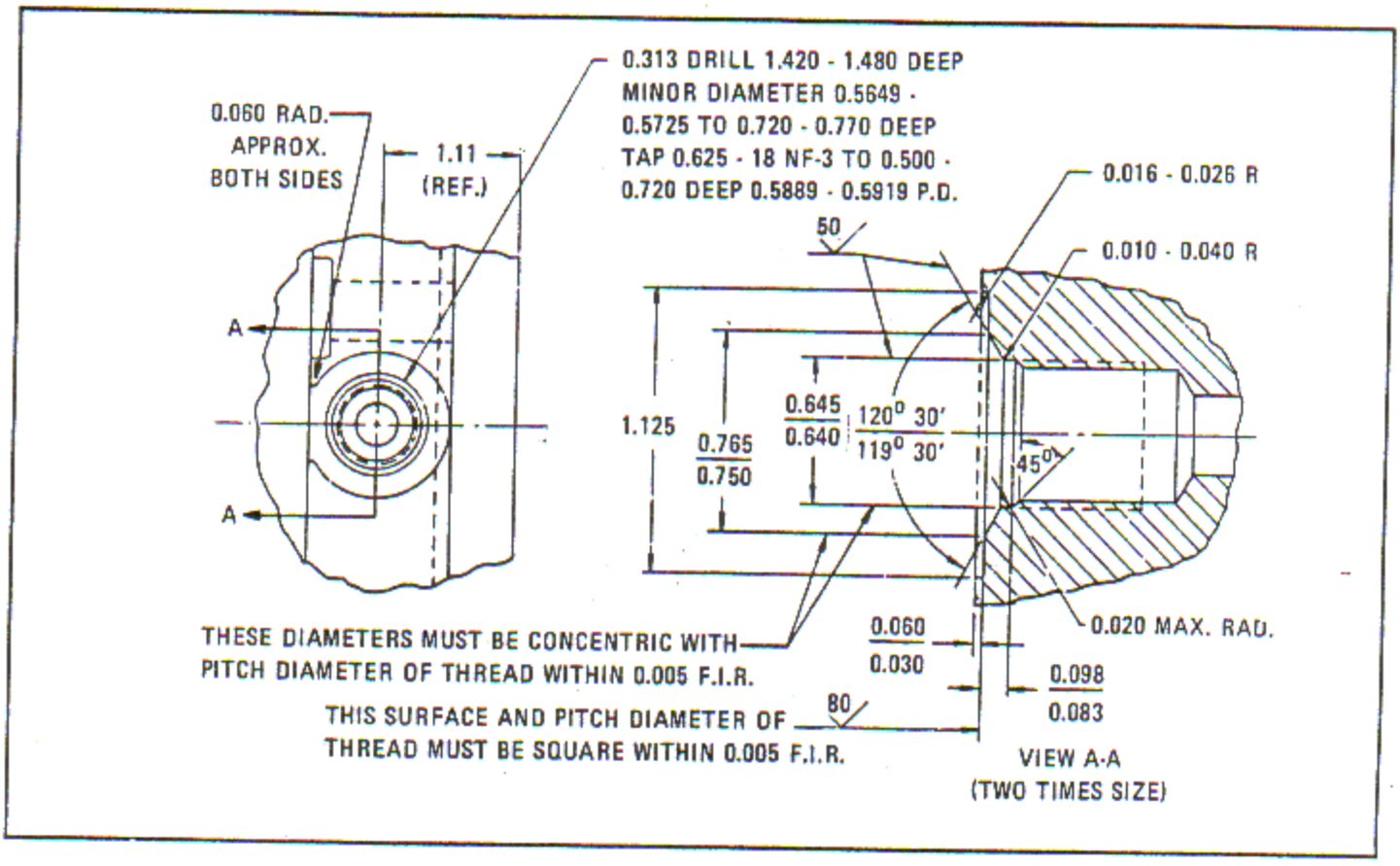

Figure 6-43. Remachining Crankcase at Tube Connector Hole

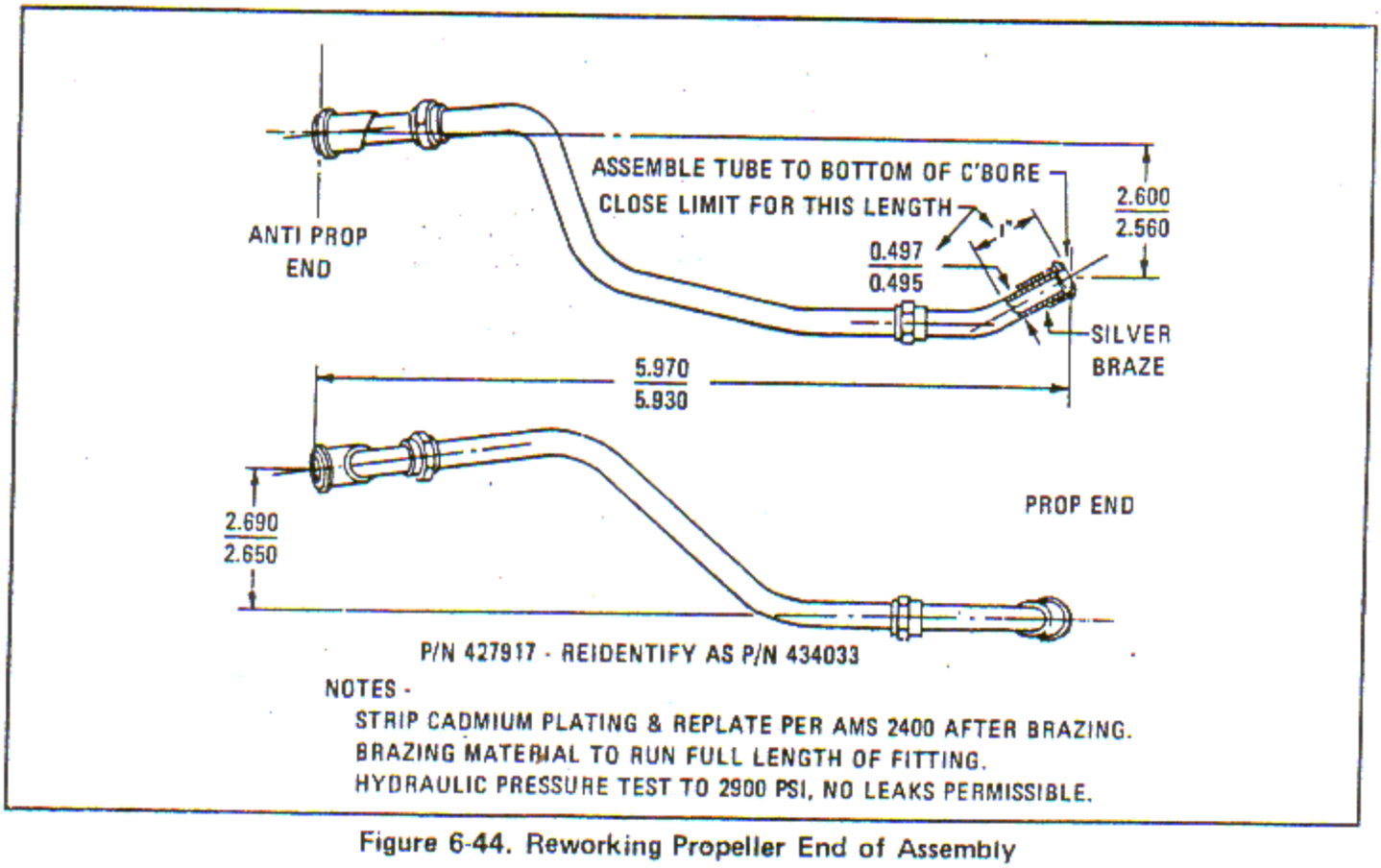

Figure 6-44. Reworking Propeller End of Assembly

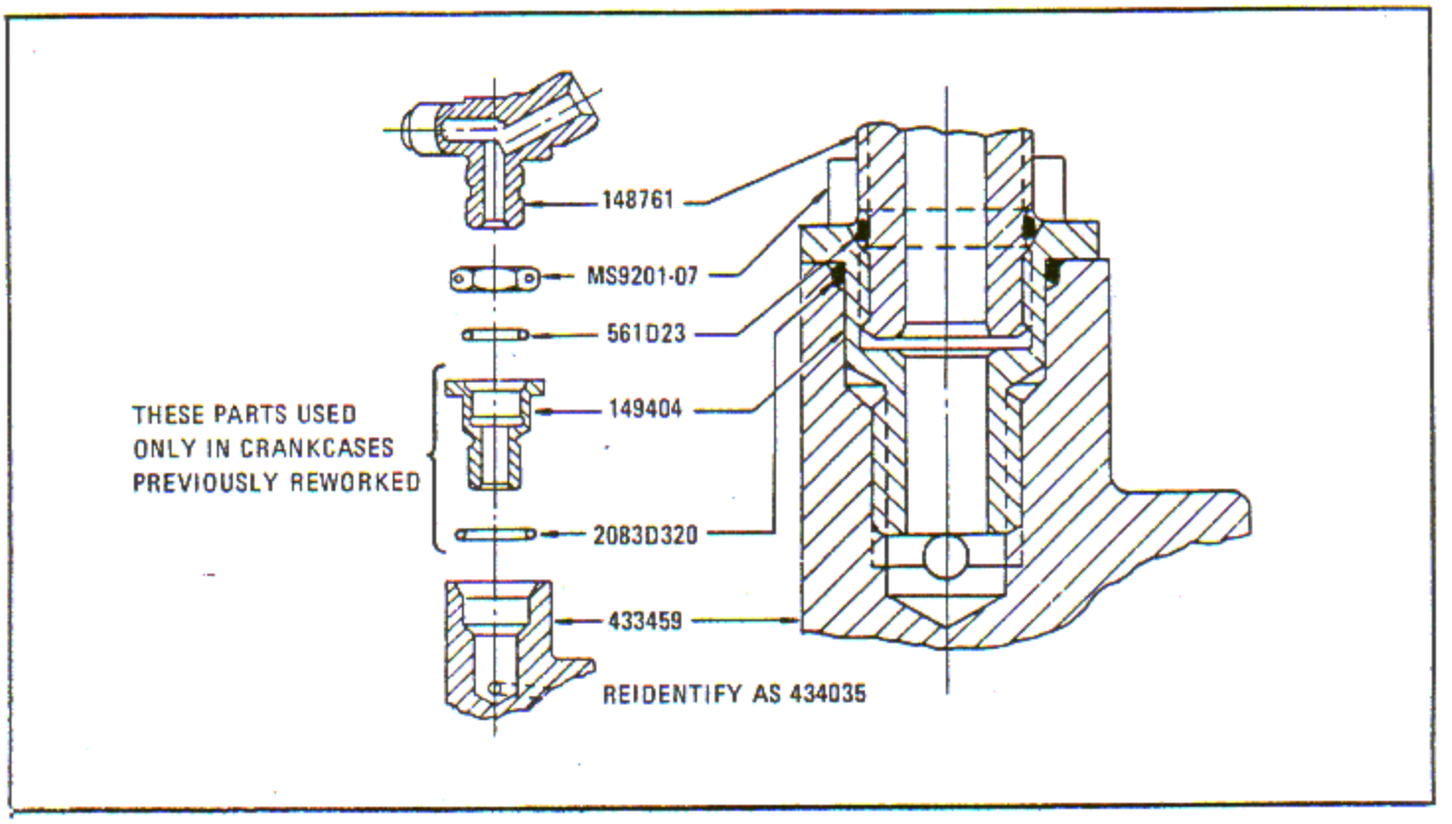

Figure 6-45. Assembling Hydro Oil Tube

h. Cadmium plate all areas that were stripped prior to removal of the cone.

6-247. Assemble Hydro Oil Tube Assembly.

a. Apply Loctite compound (American Sealant Corp., Hartford 6, Conn.) or equivalent to the OD threads of the adapter. Install the adapter and O ring in the crankcase front section.

NOTE

The adapter is used only in crankcase reworked in accordance with paragraph 6-244.

b. Assemble parts in accordance with figure 6-45.

c. Lockwire the locknut using standard practice.

6-248. OIL SUMP SCAVENGE PUMP DRIVE SHAFT GEAR BUSHING - REMOVING AND INSTALLING. (See tool group 92.)

6-249. Remove Bushing. Place the cam and oil sump scavenge pump drive support on parallels (2, figure 6-46) and press out the bushing using plug (1) as shown.

6-250. Install Bushing.

a. Heat the support to 149°C (300°F) using standard shop practices.

b. Assemble a new bushing finger tight on plug (1), and chill using standard shop practices to -57°C (-70°F).

c. Press in the bushing using plug (1) and parallels (2) as shown, until the bushing flange is seated in the counterbore. Maintain pressure until the bushing and support approach room temperature.

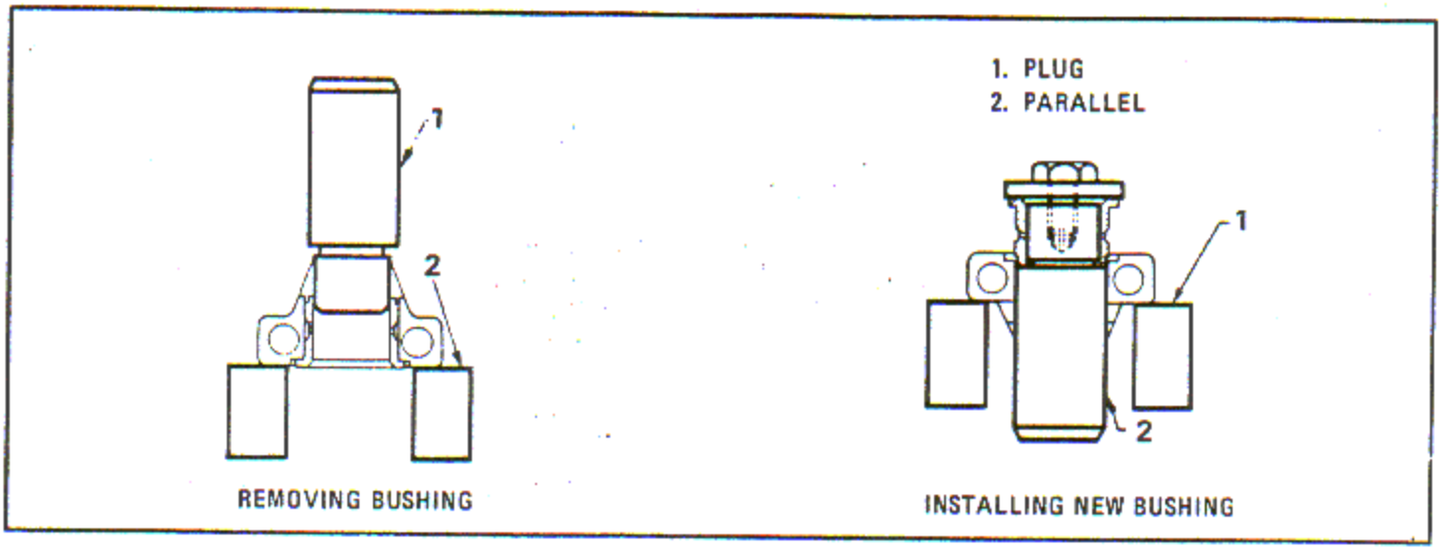

Figure 6-46. Removing Scavenge Pump Drive Shaft Gear Bushing and Installing New Bushing

6-251. Finish Bore and Face Bushing Flange.

a. Plug all oil passages with beeswax, Federal Specification C-B-191, or paraffin, Federal Specification VV-W-95. Clamp fixture (2, figure 6-47) on a lathe faceplate (1). Indicate A surfaces to run true within 0.0005 inch full indicator reading.

b. Place bushing support over the fixture locating pins and studs and clamp as shown. Bore out bushing to diameter B which is 0.812 - 0.813 inch. Check with plug gage (3).

c. Face bushing flange to dimension C which is 1.562 - 1.563 inches. Check using a vernier depth gage.

d. Dewax the support by heating to 135°C (275°F). Blow out with kerosene heated to 49°C (120°F) using 20 psi pressure.

6-252. GOVERNOR DRIVE GEAR SHAFT BUSHING REPLACEMENT. (See tool group 57.)

6-253. Remove Bushing.

a. Plug all oil passages with beeswax or paraffin, Federal Specifications C-B-191 or VV-W-95 respectively, to prevent entrance of foreign material.

b. Clamp crankcase square against an angle plate on a drill press table.

c. Drill the bushing using drill (1, figure 6-48) to dimension A, which is 2-1/8 inches. Employ a fine feed, keeping the drill clear of chips.

d. Drive out remaining shell with plug (2).

6-254. Install New Bushing.

a. Heat crankcase front section using standard shop practices to 149°C (300°F).

b. Place new bushing on the washer (4) of installing tool (3), and chill using standard shop practices to -57°C (-70°F).

c. Install the bushing as shown so that the oil hole and flat in the bushing are aligned with the oil hole in the crankcase front section.

6-255. Counterbore Bushing.

a. Plug all oil passages with beeswax or paraffin.

b. Clamp the crankcase front section square against the angle plate on a drill press table.

c. Counterbore the bushing to be flush with the counterbore in the crankcase front section. Use holder (1, figure 6-49), cutter (2) and pilot (3) as shown.

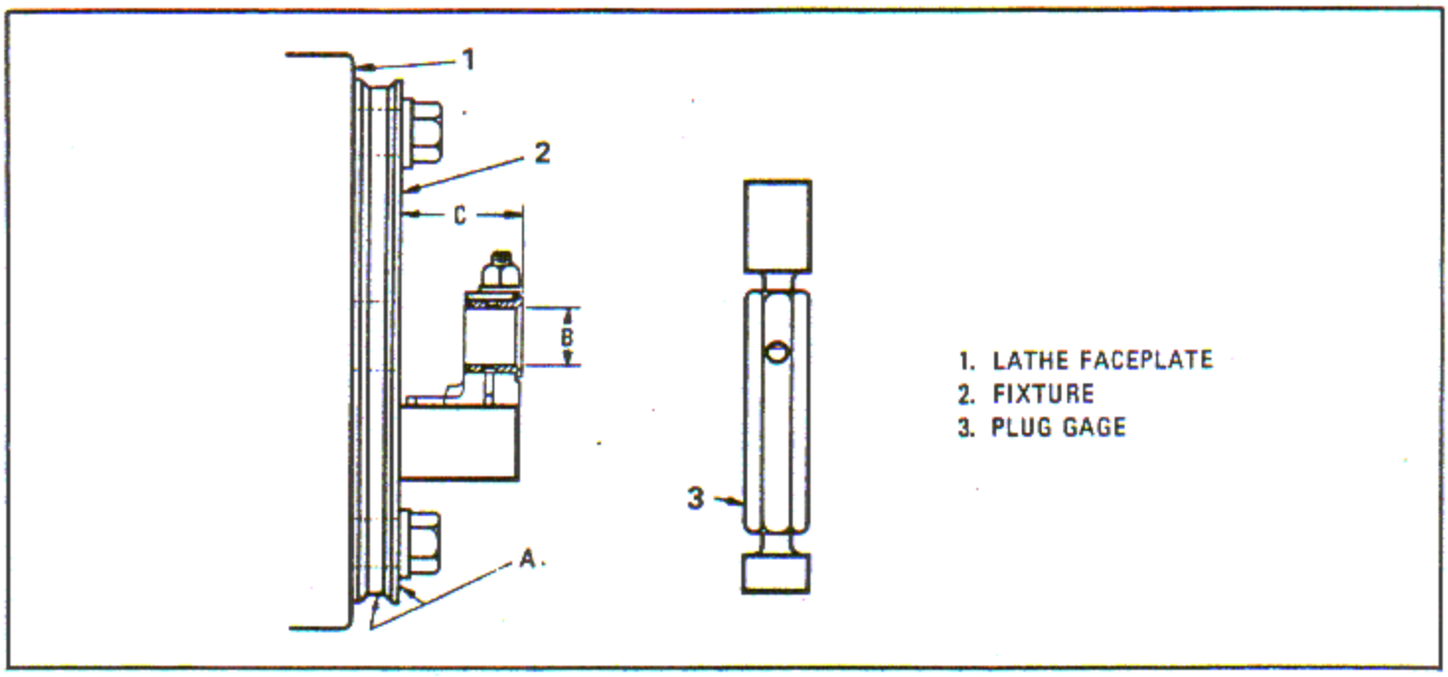

Figure 6-47. Finish Bore and Face Bushing Flange

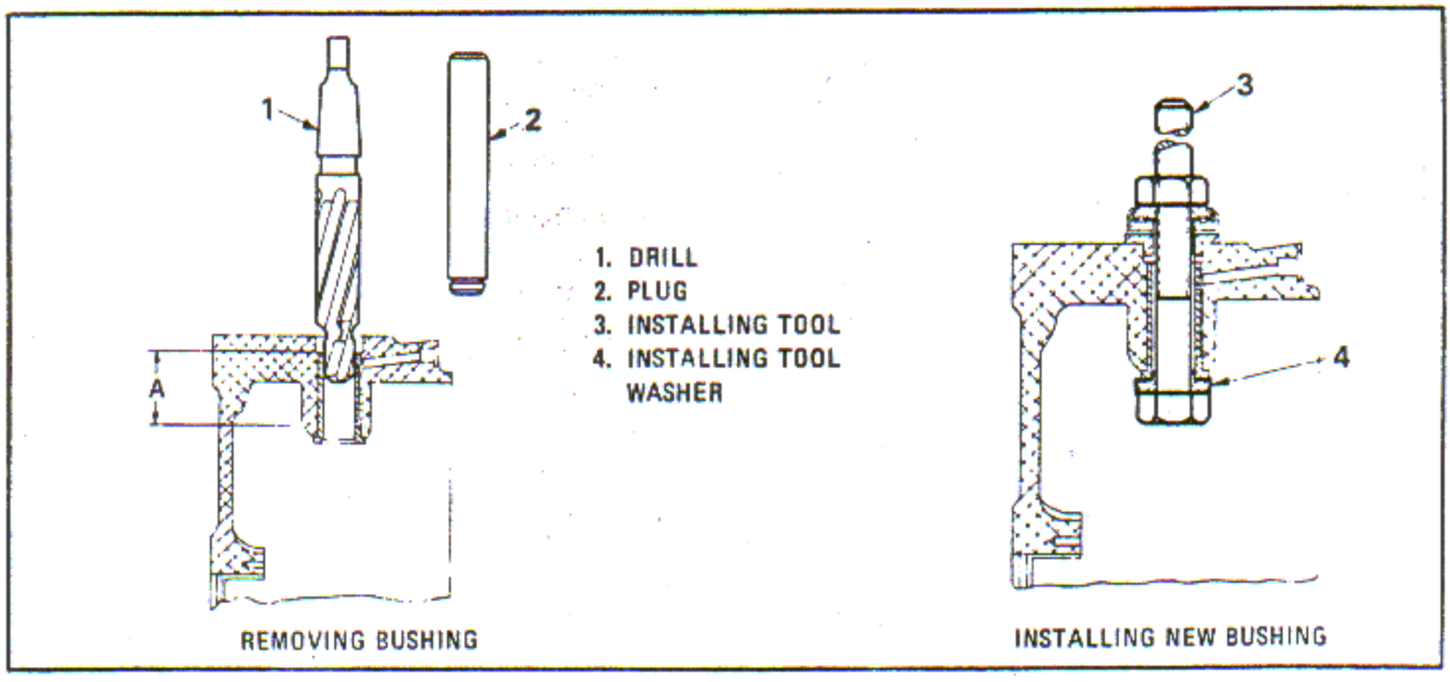

Figure 6-48. Removing Governor Drive Gear Shaft Bushing and Installing New Bushing

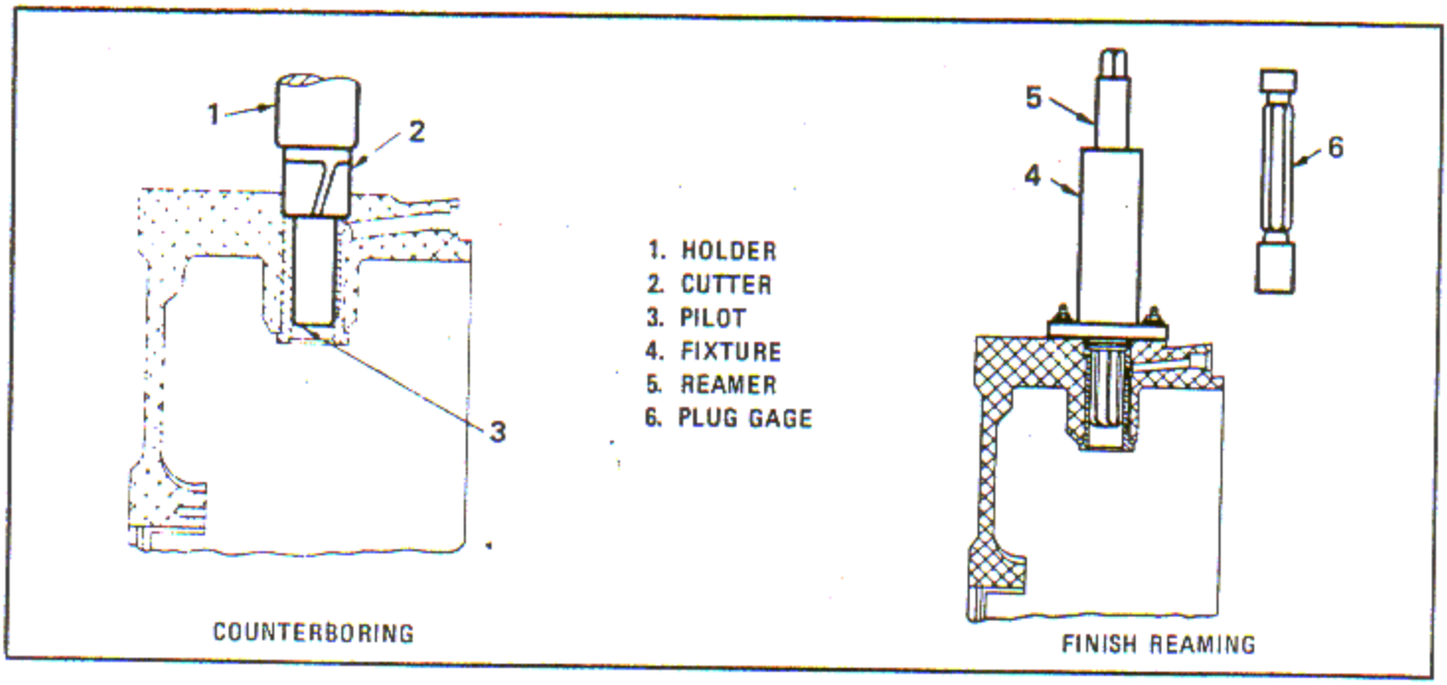

Figure 6-49. Counterboring and Finish Reaming Bushing

6-256. Finish Ream Bushing.

a. Clamp fixture (4, figure 6-49) on crankcase front section using engine nuts and washers on the studs.

b. Ream bushing with reamer (5). Check the reamed hole with gage (6).

6-257. Face and Chamfer Bushing.

a. Clamp crankcase front section square against the angle plate on a drill press table. Set tool bit (2, figure 6-50) in boring bar (1), so that angular cutting edge will clear the bushing when facing the bushing flange.

b. Face the flange. Check with gage (3). Reset the cutter so that the facing edge will clear the bushing flange during chamfering operation.

c. Chamfer to dimension A which is 1.190 - 1.210 inches and angle B which is 45 degrees as shown.

d. Dewax the crankcase front section by heating to 135°C (275°F). Blow out with kerosene, Federal Specification VV-K-211, heated to 49°C (120°F) with approximately 20 psi pressure.

6-258. PROPELLER SHAFT BUSHING REPLACEMENT (R1820-76 SERIES, -86A, -86B). (See tool group 100.)

6-259. Remove Rear Bushing Lock Pin. Remove the head of the lock pin using a 9/32 inch diameter drill (Catalog No. 950, Cleveland Twist Drill Co., Cleveland, Ohio 44101, or equivalent). Drive out the remainder of the lock pin using a suitable pin punch.

6-260. Remove Pinion Bushing Lock Pins.

a. Remove the head of the lock pin using a 9/32 inch diameter drill (Catalog No. 950, Cleveland Twist Drill Co., Ohio 44101, or equivalent).

b. Remove peened-over metal using a 5/32 inch diameter drill (Catalog No. 950, Cleveland Twist Drill Co., Cleveland, Ohio 44101, or equivalent).

c. Drive out the remainder of the lock pin using a suitable pin punch.

6-261. Remove Rear Bushing and Pinion Bushings.

a. Assemble the index plate (5, figure 6-51), adapter bushing (4), and bushing (10), in fixture

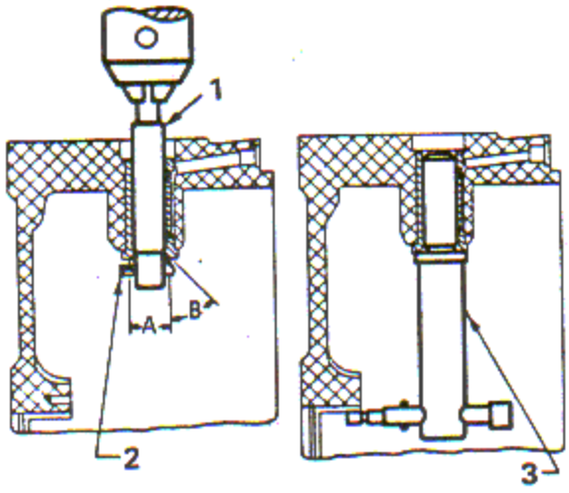

1. BORING BAR
2. TOOL BIT
3. GAGE

Figure 6-50. Facing and Chamfering Bushing

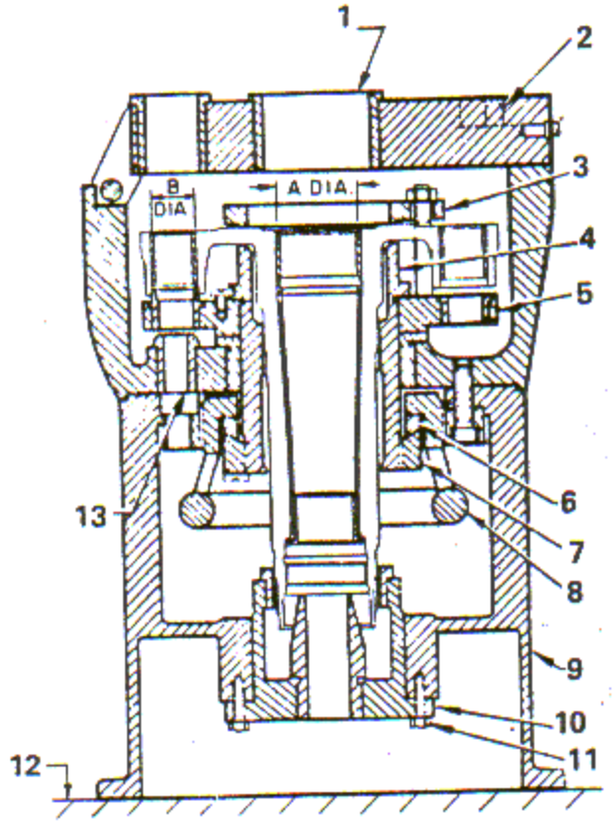

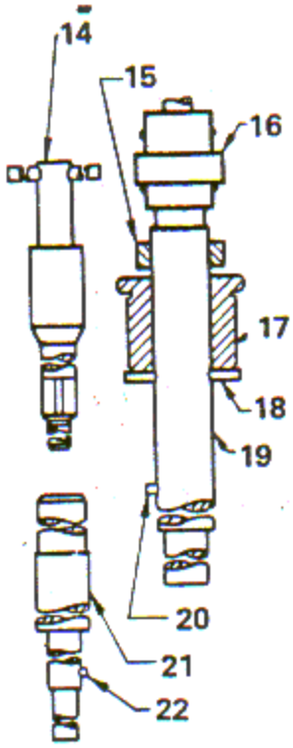

1. FIXTURE COVER BUSHING
2. FIXTURE THUMB SCREW
3. ADAPTER CLAMPING PLATE
4. ADAPTER BUSHING J
5. INDEX PLATE AND BUSHING
6. FIXTURE WASHER
7. FIXTURE NUT
8. FIXTURE HAND WHEEL
9. FIXTURE
10. BUSHING D
11. FIXTURE CAP SCREW
12. DRILL PRESS TABLE
13. FIXTURE BUSHING
14. ADAPTER ALIGNING PLUG
15. BORING BAR STOP COLLAR
16. MAGIC CHUCK
17. BUSHING G
18. STOP PIN
19. BORING BAR E
20. TOOL BIT F
21. BORING BAR H
22. TOOL BIT I

Figure 6-51. Removing Rear Bushing and Pinion Bushing

(9, figure 6-51), as shown, using fixture capscrews (11), fixture washers (6) and fixture nuts (7).

b. Insert the propeller shaft in the fixture (9) as shown. Place the adapter clamping plate (3) over the propeller shaft and clamp tightly, using index plate studs and nuts as shown.

c. Close the fixture cover and lock with fixture thumb screws (2). Align the pinion bushings with the fixture bushings (13), using the adapter index plug. Lock the assembly in the fixture (9) with the fixture handwheel (8), and remove the indexing plug.

d. Assemble boring bar (19), tool bit (20), bushing (17) and its stop collar (15) as shown. Set tool bit with a micrometer to obtain diameter A (2.735 - 2.745 inches) for the first cut. Set the stop collar to prevent cutting into the hydromatic sleeve below the rear bushing.

e. Locally fabricate a 3/8 x 5 inch stop pin (18) from drill rod. Insert the stop pin in the hole provided in the boring bar (19) under the bushing (17) as shown, to support the boring bar assembly on the cover bushing (1) while assembling a magic chuck (No. 3 Magic Chuck, No. 3 Morse Taper, Scully-Jones and Co., Chicago, Ill. 60608, or equivalent) (16) and boring bar to the drill press spindle.

f. Remove the stop pin (18), sliding the bushing into the cover bushing (1). Clamp the fixture to the drill press table (12) and bore out the first cut. Raise the spindle and bushing (17) and reset the tool bit (19) for the second cut with a micrometer to obtain diameter A (2.850 - 2.860 inches). Bore out the second cut. Reset the tool bit for the last cut with a micrometer to obtain dimension A (2.980 inch maximum). Bore out the last cut leaving a 0.010 inch wall. Remove the boring bar assembly and bushing.

g. Assemble tool bit (20) in boring bar (19), and set tool bit with a micrometer to obtain diameter B (1.495 - 1.505 inches) for the first cut. Insert the stop pin (18) in the hole provided in the boring bar and insert the assembly through the proper hole in the fixture cover, supporting the assembly on the stop pin while assembling the magic chuck (16) and boring bar to the drill press spindle. Remove the stop pin and bore out the first pinion bushing, using caution to prevent boring into the index plate bushing (5).

h. Raise the boring bar (19) and reset the tool bit (20) with a micrometer to obtain diameter B (1.605 inches maximum) for a second cut. Bore out the final cut, leaving a 0.010 inch wall. Loosen the handwheel (8) and rotate the propeller shaft and plate assembly to line up the next pinion bushing, using the indexing plug. Tighten the handwheel and repeat the foregoing operation for removing pinion bushings. Remove the propeller shaft from the fixture (9, figure 6-51) and pick out all remaining shells. Do not disturb the fixture.

6-262. Remove Propeller Shaft Front Bushing.

a. Clamp the propeller shaft to a lathe faceplate (1, figure 6-52) and assemble bushing (3) on front end of the shaft as shown.

b. Using a suitable clamp (4), adjust the lathe steady rest (2) to support the front end of the shaft. Indicate the A surface to run true within 0.001 inch full indicator reading.

c. Bore out the bushing to diameter B (2.088 - 2.098 inches) for first cut, and 2.140 inches maximum for second cut, leaving a 0.010 inch wall. Do not bore into the shoulder of hydromatic sleeve C.

d. Pick out the remaining shell.

6-263. Remove Propeller Shaft Sleeve.

a. Place a suitable rubber stopper or expansion plug (5, figure 6-52) in the rear bushing bore location against the end of the sleeve (6).

b. Stand the shaft propeller end up and fill only the inside of the sleeve (6) with pulverized dry ice, Federal Specification BB-C-104. Let sleeve chill for approximately 15 minutes.

c. Place the shaft, propeller end up, on a suitable hydraulic arbor press. Ensure the propeller shaft is properly supported with a suitable locally fabricated base (7) at the rear bushing hub location to prevent dishing of the flange.

d. Loosen the expansion plug, install a suitable locally fabricated plug (5) against the sleeve (6) and press out the sleeve before condensation forms on the propeller shaft journal.

e. Thoroughly clean out the propeller shaft inside diameter and sleeve.

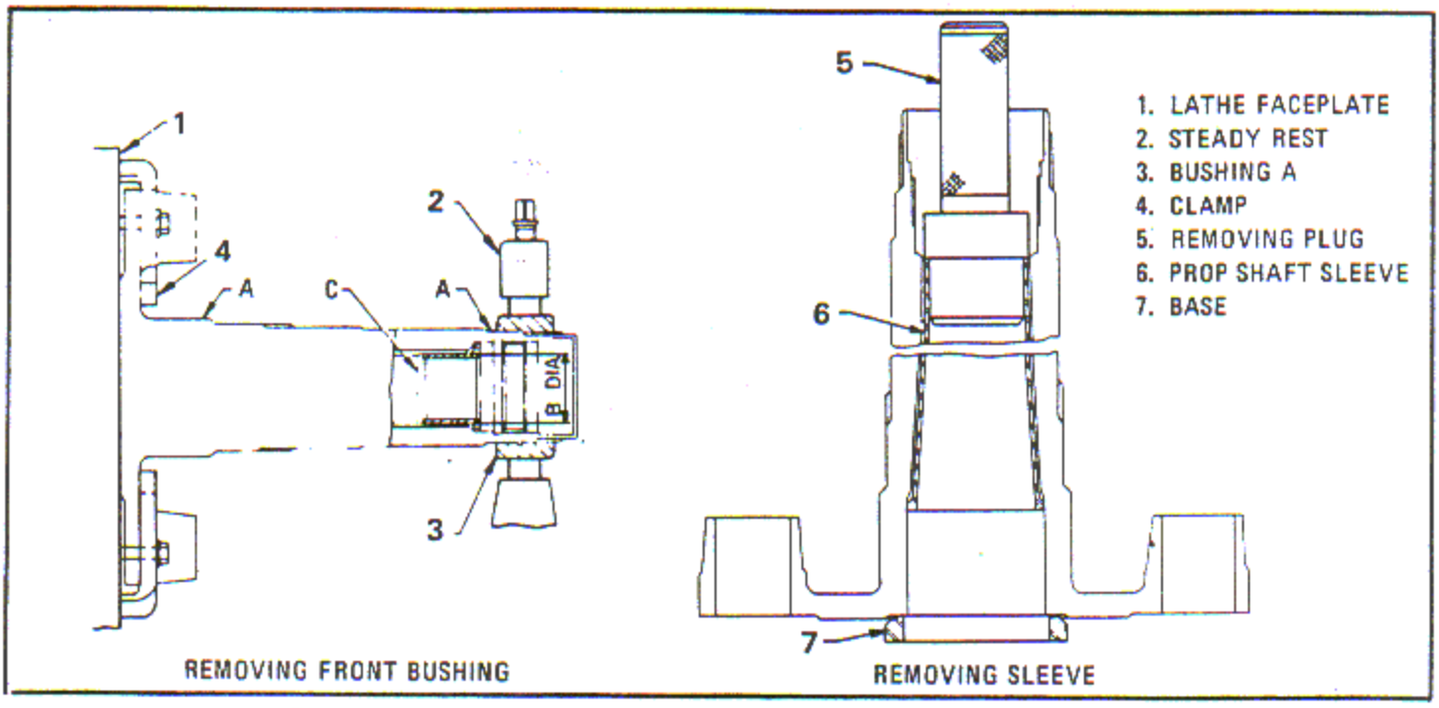

Figure 6-52. Removing Propeller Shaft Front Bushing and Sleeve

6-264. Install Propeller Shaft Sleeve and Front Bushing.

NOTE

Propeller shaft bushings are supplied in standard and 0.010 inch undersize inside diameter. Check mating crankshaft front pilot journal diameter to determine if a bushing with a standard or undersize inside diameter is required.

NOTE

Ensure the propeller shaft sleeve and front bushing pilot outside diameters, and the propeller shaft front and inside diameters are clean and smooth, and that a 0.0015 - 0.0045 inch tight fit can be obtained.

a. Assemble the propeller shaft sleeve (1, figure 6-53) on a locally fabricated installing plug (2), and the propeller shaft bushing (4) on installing plug (3).

b. Chill the sleeve and bushing to -57°C(-70°F) using standard shop practices.

c. Heat the propeller shaft in an oven or hot oil bath to 205°C (400°F).

d. Align the sleeve (1) with a suitable locally fabricated plug (2) and install the sleeve to a depth of 2.255 - 2.265 inches from the bushing bore hub face as shown in view A. Quickly reverse the shaft on the arbor press table, supporting the shaft and sleeve on base (6) as shown in view B. Place an engine washer (5) on the shoulder in the shaft above the sleeve. Press in the front bushing (4) until the bushing flange seats on the engine washer in the shaft. Maintain pressure until both bushing and shaft approach room temperature.

e. Locally fabricate a C clamp (7) with provisions for introducing oil under pressure into the forward oil hole in the large journal of the shaft. See view C. Use the same test stand, oil pressure and procedures as outlined in paragraph 7-15 for the checking of the complete front section. There should be no leakage past the sleeve in one minute.

6-265. Install Propeller Shaft Rear Bushing.

NOTE

Propeller shaft bushings are supplied with standard and 0.010 inch undersize inside diameter. Check the mating crankshaft rear pilot journal diameter to determine if a bushing with a standard or undersize inside diameter is required.

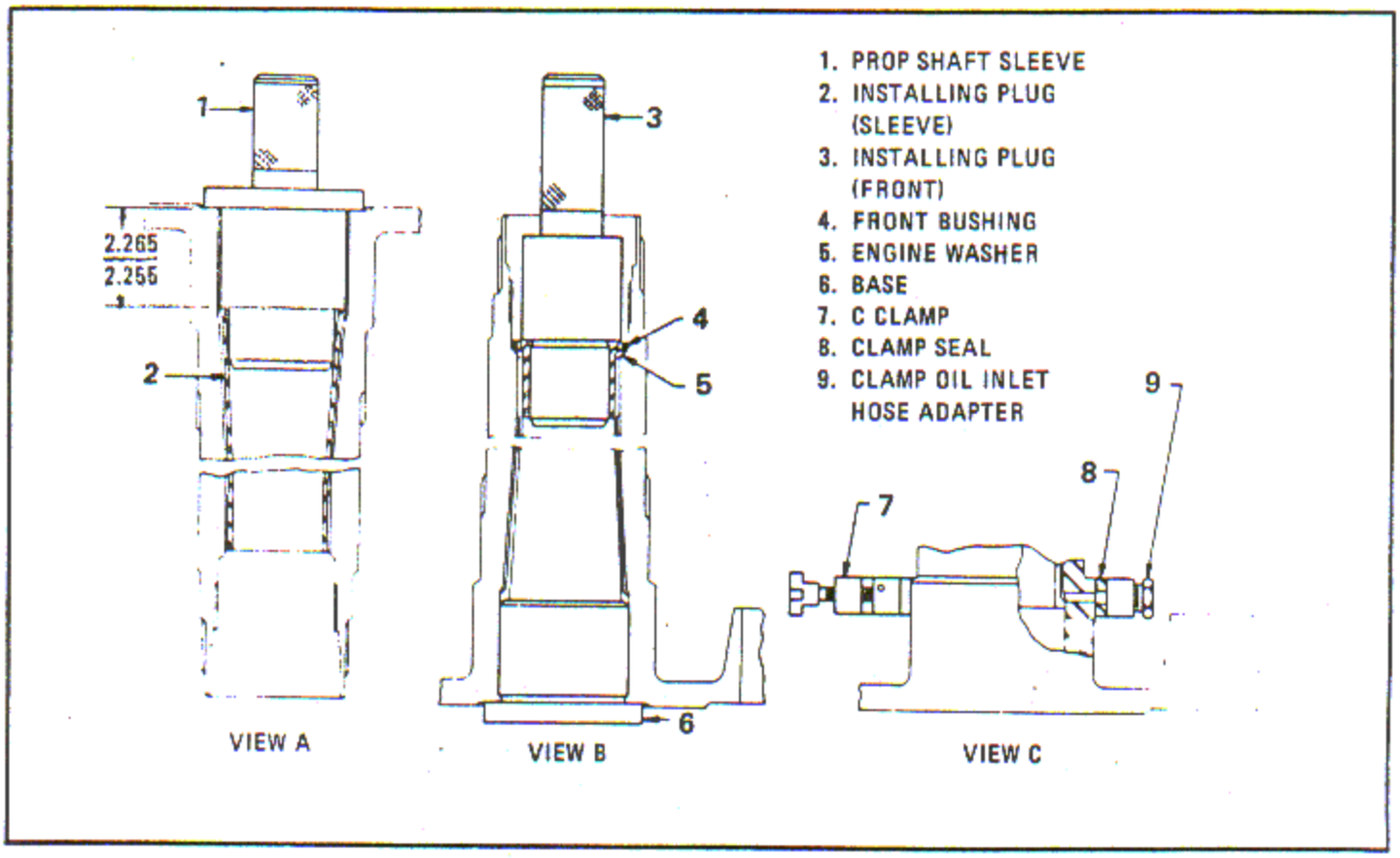

Figure 6-53. Installing and Pressure Checking Propeller Shaft Sleeve and Front Bushing

a. Assemble the proper inside diameter size bushing on plug (3, figure 6-54) so that the lower plunger engages the bushing oil hole. Chill bushing and plug to approximately -57°C (-70°F). Heat the propeller shaft in an oven or hot oil bath to 205°C (400°F).

b. Support the shaft on an arbor press table (5) using a locally fabricated wood block (8) as shown. Insert the plug locating pin into the propeller shaft oil hole and depress the spring so that the locating pin engages the slot in the plug. Press the bushing in until the plug flange contacts the end of the shaft. Maintain pressure until the bushing is tight in the shaft.

6-266. Install Pinion Bushings.

a. Heat the propeller shaft in an oven or hot oil bath to 205°C (400°F).

b. Place the bushing on the plug of plug and base (4), and assemble finger tight in the plug cap (2) with the spring loaded pin in the oil hole of the bushing as shown. Chill the assembly to -57°C (-70°F).

c. Place the plug assembly into the bushing hole in the propeller shaft so that the guide pins straddle the pinion arm. Support the propeller shaft on an arbor press table using base of plug and base as shown, and press the bushing in until the plug cap contacts the pinion arm. Repeat this operation for the remaining bushings.

6-267. Install Rear Bushing Lock Pin.

a. Plug all oil holes and passages with beeswax, Federal Specification C-B-191 or paraffin, Federal Specification VV-W-95.

b. Drill hole through one wall of bushing at lock pin hole as shown. See figure 6-55.

c. Ream to diameter A as provided in the following list. Drive in the lock pin.

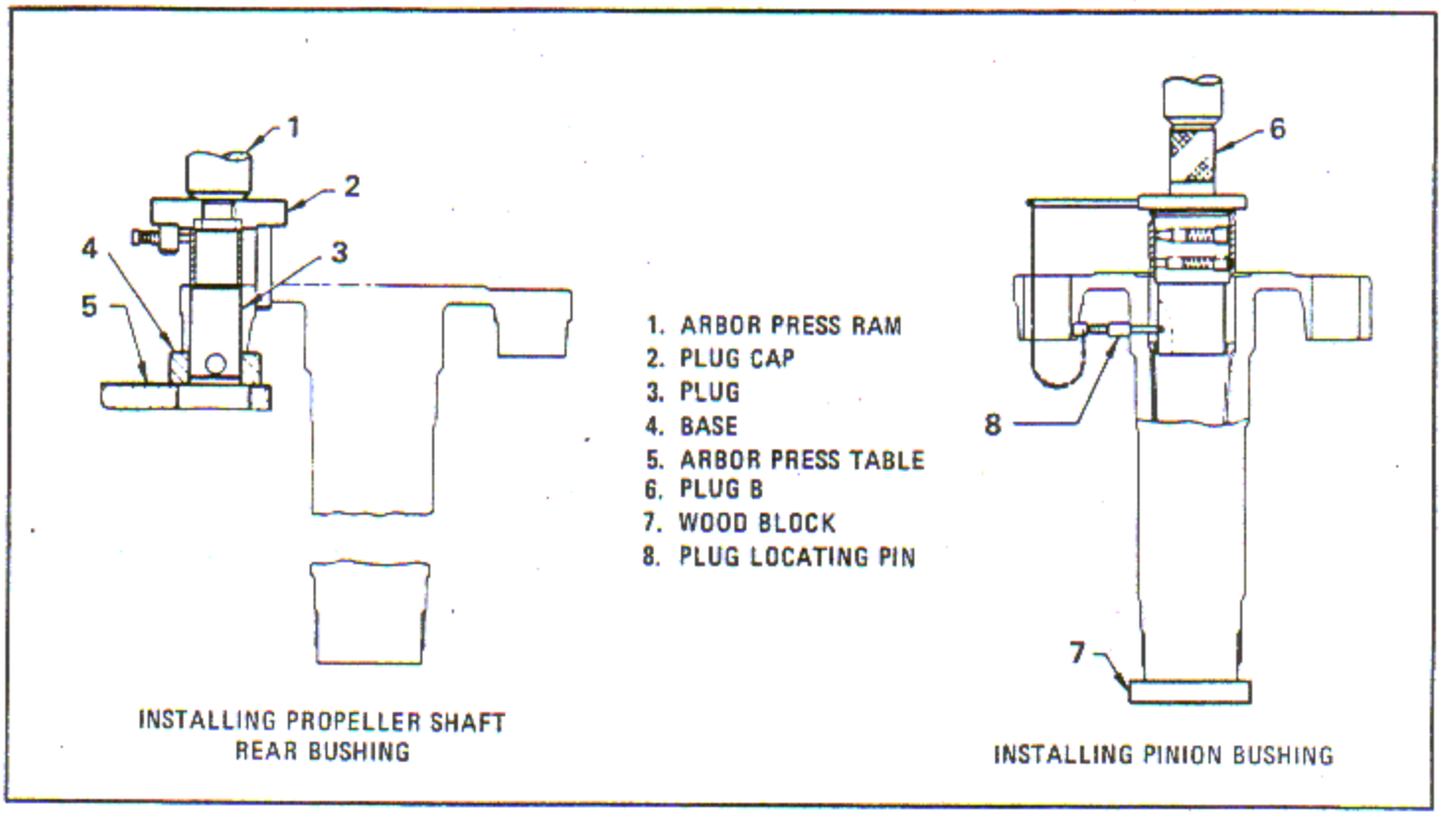

Figure 6-54. Installing Propeller Shaft Rear Bushing and Pinion Bushing

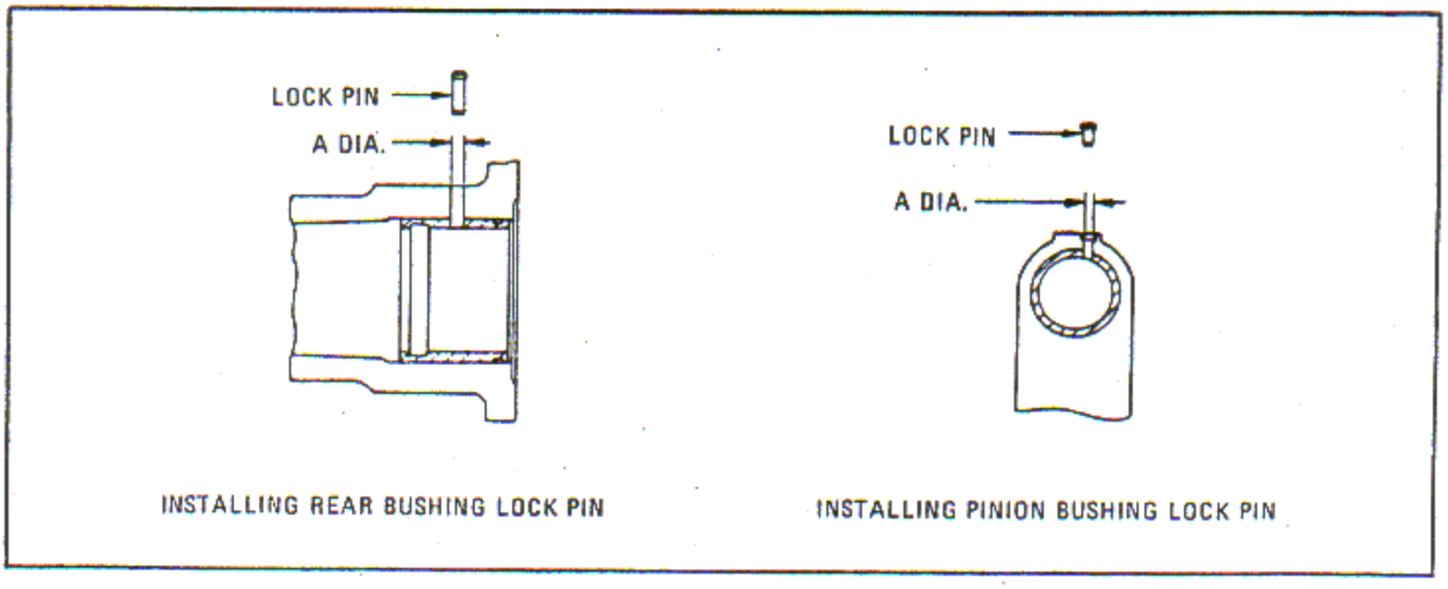

Figure 6-55. Installing Rear Bushing Lock Pin and Pinion Bushing Lock Pin

Pin Diameter	Drill *Diameter	A Diameter (Inches)
Standard	15/64	0.2485 - 0.2495
0.010	1/4	0.2585 - 0.2595
0.015	1/4	0.2635 - 0.2645

*NOTE

The foregoing drills may be ordered from: Cat. No. 290, Cleveland Twist Drill Co., 1242 East 49th Street, Cleveland, Ohio, or equivalent.

6-268. Install Pinion Bushing Lock Pin.

a. Drill a hole through one wall of the bushing at the lock pin hole as shown. See figure 6-55.

b. Ream to diameter A provided in the following list.

Pin Diameter	Drill *Diameter	A Diameter (Inches)
Standard	13/64	0.2175 - 0.2185
0.010	7/32	0.2275 - 0.2285
0.015	7/32	0.2325 - 0.2325

*NOTE

The foregoing drills may be ordered from: Cat. No. 950, Cleveland Twist Drill Co., 1242 East 49th Street, Cleveland, Ohio.

c. Drive in the lock pin and peen shaft metal over the head of the lock pin using a suitable punch.

6-269. Finish Bore Propeller Shaft Front and Rear Bushings and All Pinion Bushings.

a. Insert the propeller shaft into fixture. See figure 6-56.

b. Place the clamping plate of adapter (17) over the propeller shaft and clamp tightly, using studs from index plate and adapter studs.

c. Close the fixture cover and lock with fixture thumb screws (16).

d. Align pinion bushings with fixture bushings (13) using the adapter indexing plug (1).

e. Lock the assembly in the fixture with the fixture hand wheel (23).

f. Assemble boring bar (8), bushing (6), stop collar of boring bar (5) and tool bits (9 and 10) as shown.

g. Set the stop collar (5) to prevent the upper tool bit (9) from cutting into the hydromatic sleeve below the bushing.

NOTE

Prior to setting tool bits for boring front and rear propeller shaft bushings, check the propeller shaft pilot journal diameters on the mating crankshafts to obtain the required dimensions.

h. Set tool bits with a micrometer to obtain bushing diameters that will provide a 0.0025 - 0.0045 inch loose fit between the front bushing and crankshaft front pilot journal, and a 0.003 - 0.005 inch loose fit between the rear bushing and crankshaft rear pilot journal.

NOTE

Vibro-peen bushing undersize on end of propeller shaft between the propeller retaining nut lock holes as shown in view A. Example: -6 for 0.006 inch undersize. Obliterate prior undersize markings.

When boring bushings to accommodate crankshafts with standard size journals, set tool bits to obtain standard bushing inside diameter which is 2.6245 - 2.6255 inches for the rear bushing and 1.9995 - 2.0005 inches for the front bushing.

i. Locally fabricate a 3/8 x 5 inch stop pin (7) of drill rod and insert in hole provided in boring bar (8) under bushing (6) as shown, to support

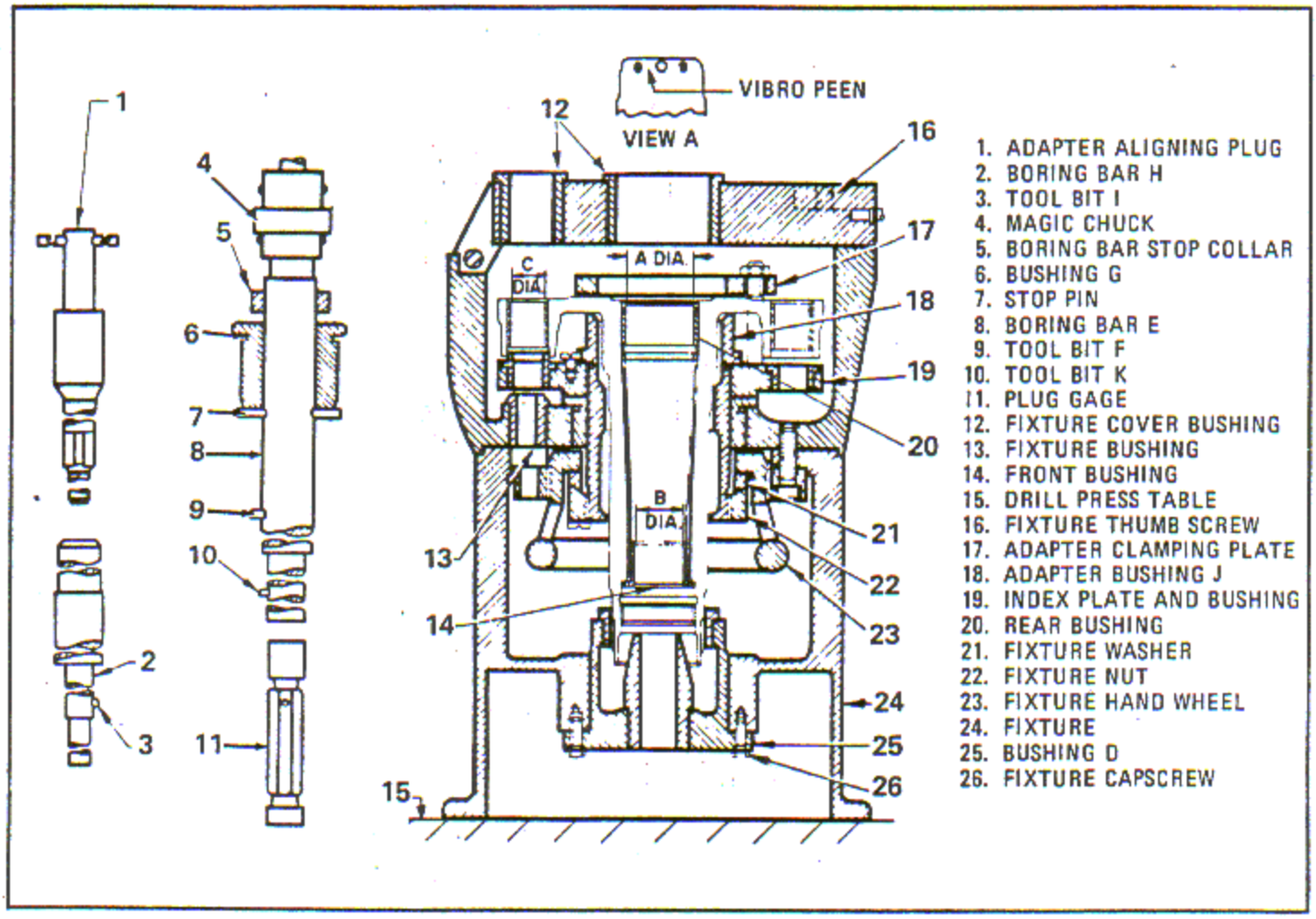

Figure 6-56. Finish Bore Propeller Shaft Front and Rear Bushing and All Pinion Bushings

the boring bar on the cover bushing while assembling a magic chuck (Magic Chuck No. 3, Scully Jones and Co., 1901 Rockwell St., Chicago, Ill., or equivalent) and boring bar to drill press spindle. Clamp the fixture (24, figure 6-56) to the drill press table (15).

j. Remove stop pin (7), sliding bushing (6) into cover bushing (12), and finish bore front and rear bushings (14 and 20). A surface finish of 13 microinches rms or better is required on the inside diameter of the bushings. Check dimensions using standard precision measuring instruments.

k. Assemble tool bit in boring bar, and set tool bit using a micrometer to obtain dimension C (1.3975 - 1.3985 inches).

l. Insert the stop pin in the hole provided in the boring bar and insert the boring bar assembly through the proper bushing in the fixture cover, supporting the bar assembly on the stop pin while assembling a magic chuck (Magic Chuck No. 3, Scully Jones and Co., 1901 Rockwell St., Chicago, Illinois, or equivalent) and boring bar, group 100 to the drill press spindle.

m. Remove the stop pin and finish bore the first pinion bushing.

NOTE

Do not bore into the index plate bushing.

n. A surface finish of 13 microinches rms or better is required on the inside diameter of bushings.

o. Loosen the handwheel and rotate the propeller shaft and plate assembly to line up the next pinion bushing, using the indexing plug. Tighten the fixture handwheel, finish bore bushing and

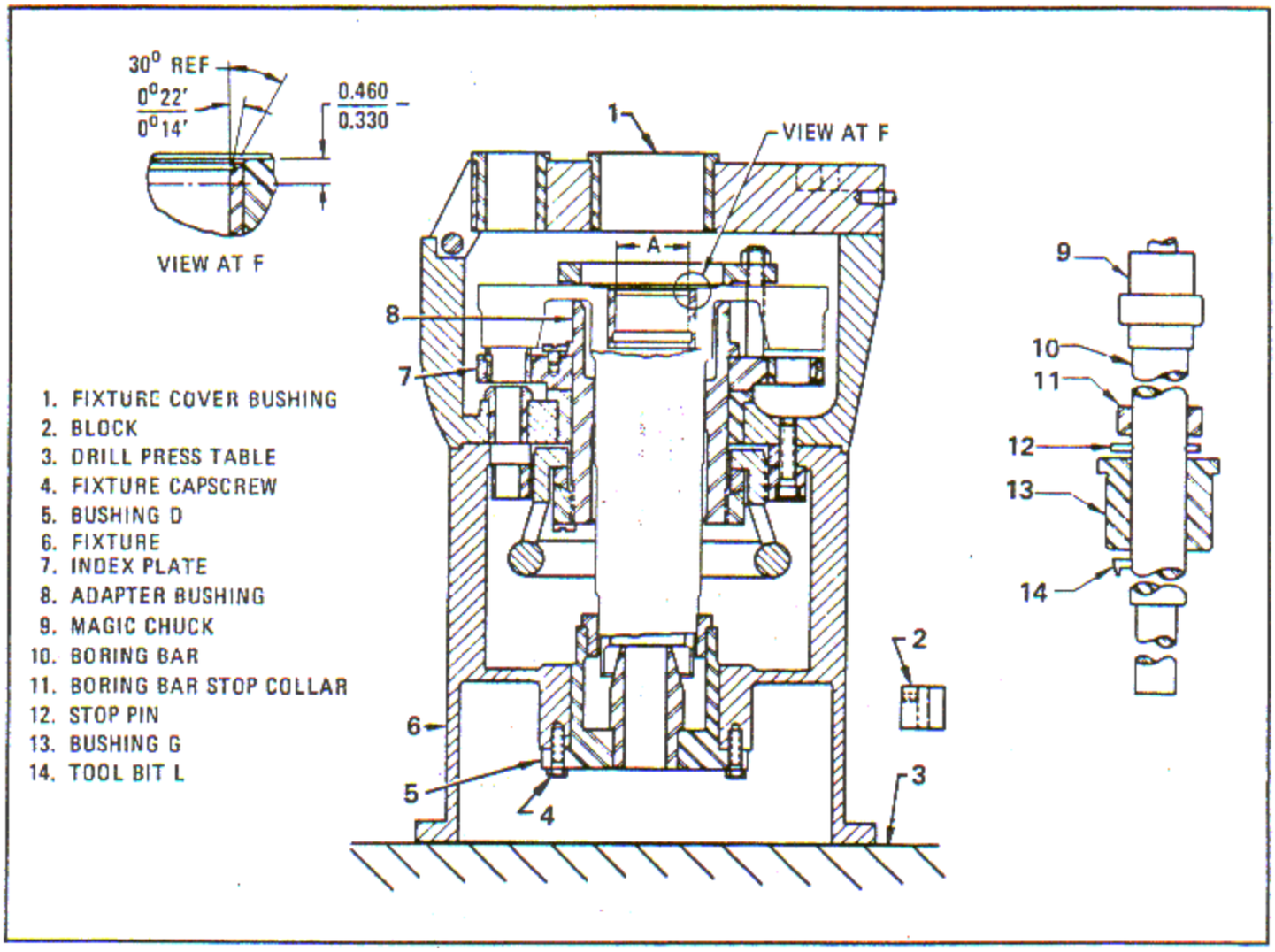

Figure 6-57. Boring Taper in Rear Bushing

repeat the foregoing operation for the remaining pinion bushings. Check the bores with the proper plug gage.

6-270. Bore Taper In Rear Bushing.

a. Assemble boring bar (10, figure 6-57), stop collar (11), bushing (13) and tool bit (14) as shown.

b. Insert the boring bar assembly in the fixture (6), support the boring bar with a locally fabricated 3/8 x 5 inch drill rod stop pin (12) in the hole provided in the boring bar (10). Assemble a magic chuck (9) and the boring bar to a drill press spindle.

c. Set the boring bar stop collar (11) so that the top of the tool bit (14) will line up with the bottom of the original 30 degree chamfer in the rear bushing.

d. Set the tool bit to form a taper in inside diameter of bushing to angle and depth as shown.

e. Remove the stop pin (12) and machine taper. A surface finish of 13 microinches rms or better is required. Check dimensions using standard precision measuring instruments.

f. Remove the propeller shaft from the fixture.

g. Break all sharp edges 0.003 - 0.015 inch approximate radius and blend.

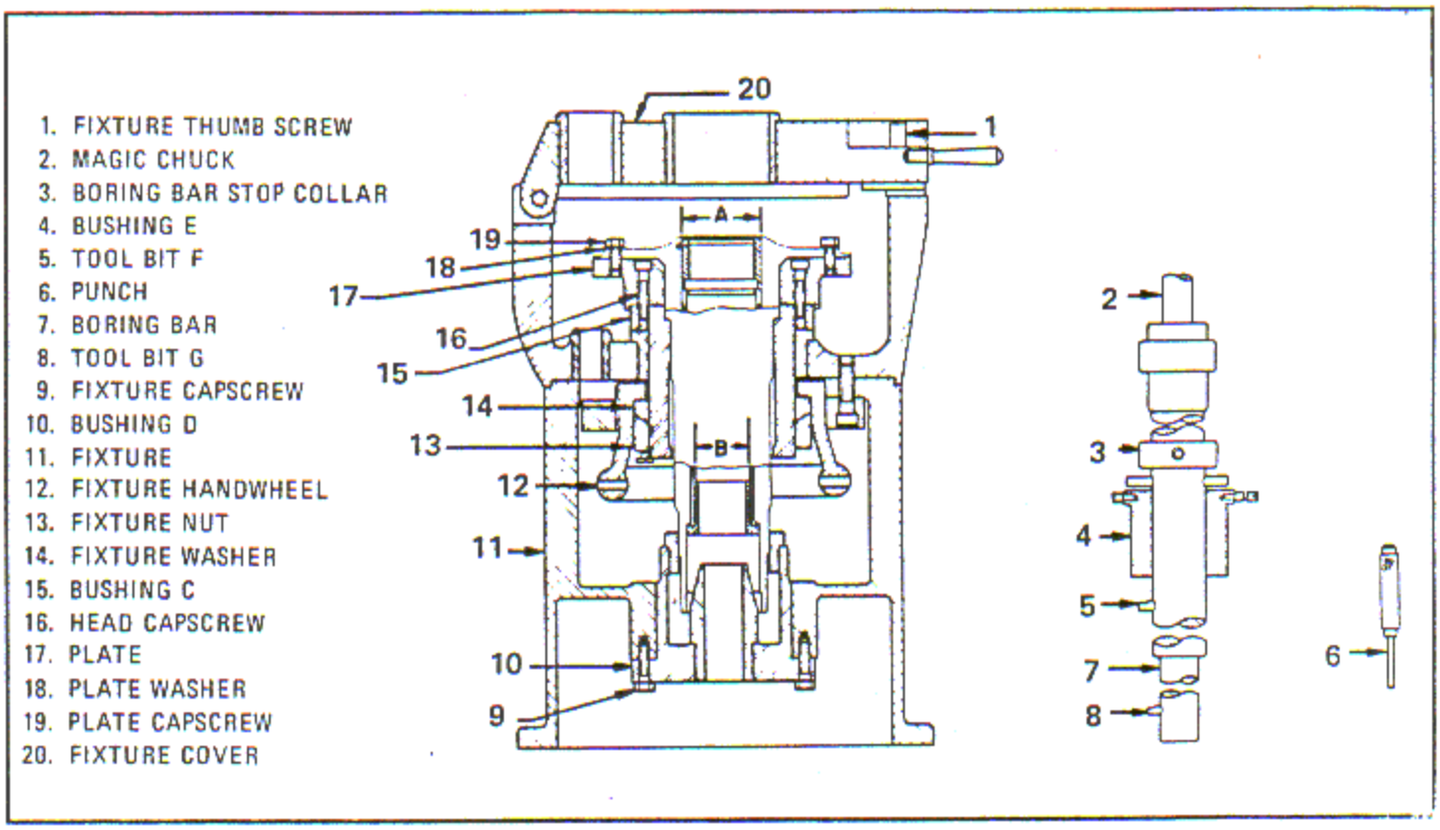

Figure 6-58. Removing Propeller Shaft Bushings

h. Dewax the propeller shaft by heating to 135°C (275°F). Blow out with petroleum solvent, Federal Specification P-S-661, heated to 49°C (120°F) maximum with approximately 20 psi.

i. When the tool bit requires resharpening, place in block and sharpen.

6-271. PROPELLER SHAFT BUSHINGS - REPLACEMENT (R1820-80 SERIES). (See tool group 100.)

6-272. Remove Front and Rear Bushings.

a. Plug all oil passages with beeswax, Federal Specification C-B-191, or paraffin, Federal Specification VV-P-121.

b. Assemble bushings (4, 10 and 15, figure 6-58) and plate (17) to fixture (11) as shown, using fixture capscrews (9), fixture washer (14), fixture nut (13) and plate socket head capscrews (19).

c. Insert the propeller shaft into fixture (11), and clamp to plate (17) using the plate washer (18) and plate capscrew (19). Close the fixture cover (20) and fasten with fixture thumb screws (1). Lock the assembly with the fixture hand wheel (12).

d. Clamp fixture (11) to a drill press table. Assemble boring bar (7), boring bar stop collar (3), bushing (4) and tool bit (5).

e. Set the boring bar stop collar (3) to prevent cutting into the hydromatic oil sleeve below the rear bushing (15). Set tool bit with a micrometer to obtain diameter A (2.740 - 2.750 inches) for the first cut.

f. Insert the boring bar assembly into the fixture and support with a locally fabricated 3/8 x 5 inch stop pin of drill rod in the hole provided in the boring bar. Assemble a magic chuck (No. 3 Magic Chuck, Scully Jones and Co., Chicago, Illinois 60608, or equivalent) and boring bar to a drill press spindle. Remove the stop pin and bore out the first cut. Raise the boring bar and bushing.

g. Reset the tool bit with a micrometer to obtain diameter A (2.845 - 2.855 inches) for a sec-

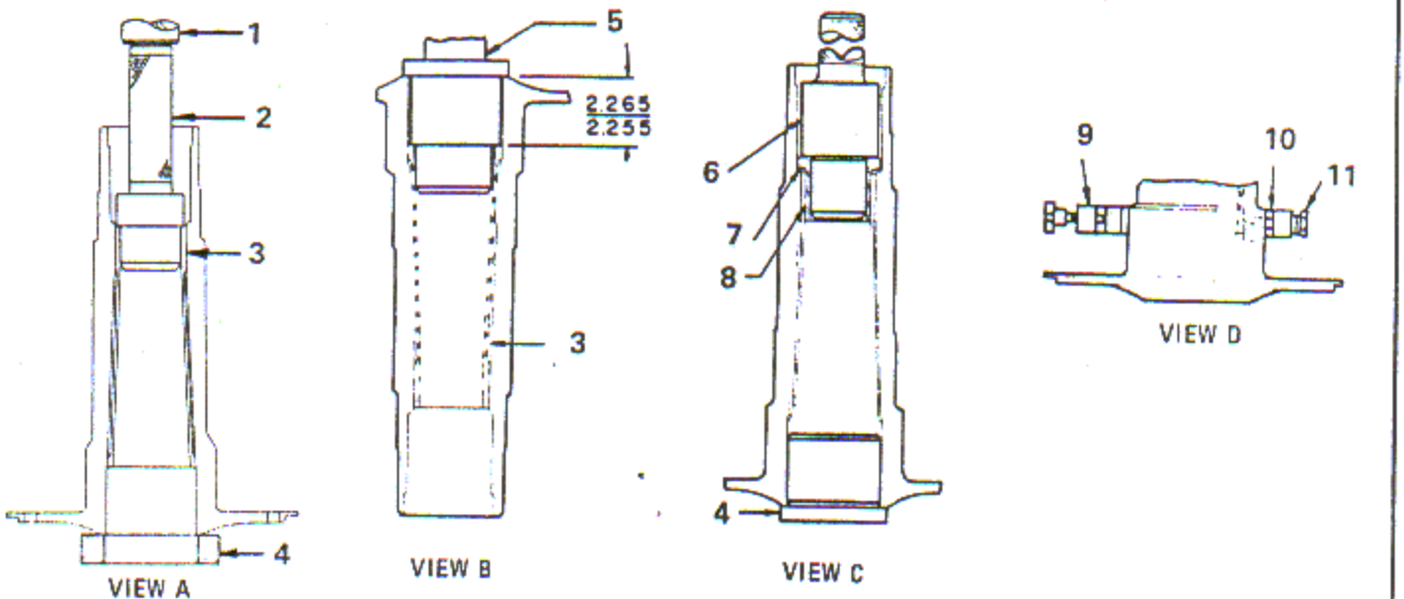

1. ARBOR PRESS RAM
2. REMOVING PLUG
3. PROP SHAFT SLEEVE
4. BASE
5. INSTALLING PLUG (SLEEVE)
6. INSTALLING PLUG (FRONT)
7. ENGINE WASHER
8. FRONT BUSHING
9. C CLAMP
10. CLAMP SEAL
11. CLAMP OIL INLET HOSE ADAPTER

Figure 6-59. Removing and Installing Propeller Shaft Sleeve

ond cut. Bore out the second cut. Reset the tool bit with a micrometer to obtain diameter A (2.980 inches maximum) and bore out the final cut, leaving a 0.010 inch wall. Raise the boring bar and bushing. Remove the tool bit and insert tool bit.

h. Set the tool bit with a micrometer to obtain diameter B (2.140 inches maximum). Bore out the bushing leaving a 0.010 inch wall. Pick out the remaining shells.

i. Drive the remainder of the lock pin in the propeller shaft rear bushing below flush using a suitable 1/8 inch diameter punch. Mark the propeller shaft flange bolt hole opposite the lock pin. Remove the shaft from the fixture, but do not disassemble the fixture.

6-273. Remove Propeller Shaft Sleeve.

a. Place a suitable rubber stopper or expansion plug in the rear bushing bore location against the end of the sleeve.

b. Position the shaft, propeller end up, and fill only the inside of the sleeve with pulverized dry ice, Federal Specification BB-C-104. Permit the sleeve to chill for approximately 15 minutes.

c. Place the shaft, propeller end up, on a suitable hydraulic arbor press. Ensure the propeller shaft is properly supported with a suitable locally fabricated base at the rear bushing hub location to permit clearance for the sleeve during its removal. See figure 6-59.

d. Loosen the expansion plug, install a suitable locally fabricated plug against the sleeve (3, figure 6-59), and press out the sleeve before condensation forms on the propeller shaft journal.

e. Thoroughly clean out the propeller shaft inside diameter and sleeve.

6-274. Install Propeller Shaft Sleeve and Front Bushing.

NOTE

Propeller shaft bushings are supplied in standard and 0.010 inch undersize inside diameter. Check mating crankshaft front pilot journal diameter to determine if a bushing with a standard or undersize inside diameter is required.

Ensure the propeller shaft sleeve and front bushing pilot outside diameters, and propeller shaft front and rear inside diameters are clean and smooth and a 0.0015 - 0.0045 inch tight fit can be maintained.

a. Assemble the sleeve (3, figure 6-59) on a suitable plug, and the proper inside diameter size bushing on installing plug (5).

b. Chill the sleeve and bushing to -57°C (-70°F).

c. Heat the propeller shaft in an oven or hot oil bath to 205°C (400°F).

d. Align the sleeve with a suitable locally fabricated plug and install sleeve to a depth of 2.255 - 2.265 inches from the bushing bore hub face as shown in view B. Quickly reverse the shaft on the arbor press table, supporting the shaft and sleeve on base, as shown in view C. Place an engine washer (7) on the shoulder in the propeller shaft above the sleeve. Press in the front bushing (8) until the bushing flange seats on the engine washer in the shaft. Maintain pressure until both bushing and shaft approach room temperature.

e. Use a suitable locally fabricated C type clamp (9) with provision for introducing oil under pressure into the forward oil hole in the large journal of the shaft as shown in view D. Use the same test stand, oil pressure and applicable procedures as outlined in paragraph 7-15 for the checking of the complete front section. There should be no leakage past the sleeve in one minute.

6-275. PROPELLER SHAFT REAR BUSHING INSTALLATION. (See tool group 100.)

NOTE

Propeller shaft bushings are supplied with a standard and a 0.010 inch undersize inside diameter. Check the mating crankshaft rear pilot journal diameter to determine if a bushing with a standard or undersize inside diameter is required.

6-276. Procedure.

a. Assemble the proper inside diameter size bushing on plug (2, figure 6-60) so that the lower plunger engages the bushing oil hole. Chill the bushing and plug to approximately -57°C (-70°F). Heat the propeller shaft in an oven or hot oil bath to 205°C (400°F).

b. Support the propeller shaft on an arbor press table, using a wood block (3) as shown. Insert the plug locating pin (4) into the propeller shaft oil hole and depress the spring so that the locating pin engages the slot in the plug. Press the bushing in until the plug flange contacts the end of the shaft. Maintain pressure until the bushing is tight in the shaft.

6-277. Drill New Lock Pin Hole and Install New Lock Pin in Rear Bushing.

a. Plug all oil holes and channels with beeswax or paraffin.

b. Insert the propeller shaft into fixture (18) and clamp to plate (12) using washers (10) and plate capscrews (11). Insert jig into the rear bushing and engage the jig locating pin (21) in a flange bolt hole, other than that marked in paragraph 6-272, step i, so that the lock pin hole will be at a new location.

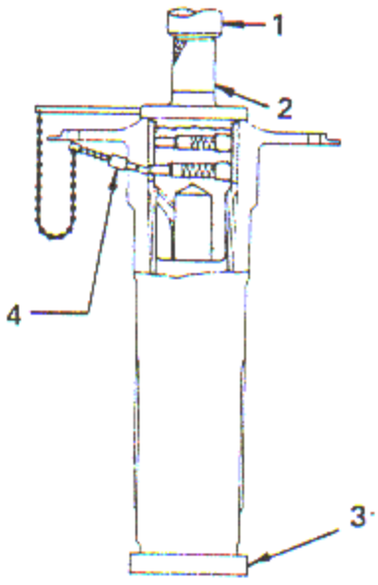

PROPELLER SHAFT

1. ARBOR PRESS RAM
2. PLUG
3. WOOD BLOCK
4. PLUG LOCATING PIN
5. DRIVER
6. PLUG GAP
7. REAMER
8. DRILL
9. JIG SOCKET HEAD CAPSCREW
10. PLATE CAPSCREW
11. PLATE WASHER
12. PLATE
13. PLATE SOCKET HEAD CAPSCREW
14. BUSHING B
15. FIXTURE WASHER
16. FIXTURE NUT
17. FIXTURE HANDWHEEL
18. FIXTURE
19. BUSHING C
20. FIXTURE CAPSCREW
21. JIG LOCATING PIN
22. JIG DRIVER
23. JIG REAMER BUSHING
24. JIG DRILL BUSHING

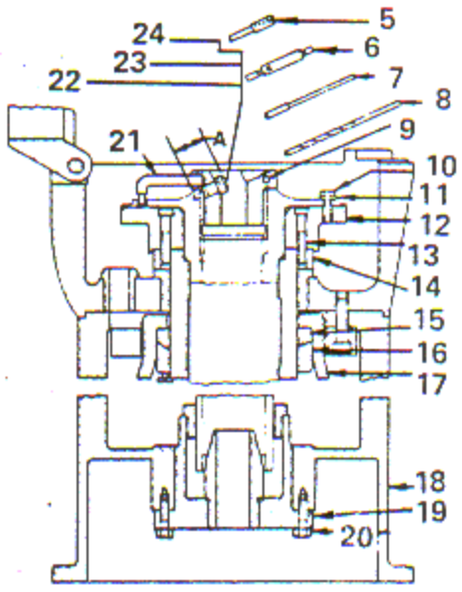

LOCK PIN

Figure 6-60. Installing Propeller Shaft Rear Bushing and Lock Pin

c. Tighten the jig in the rear bushing by turning the jig socket head capscrew. Insert the jig drill bushing (24, figure 6-60) into the jig and drill the hole to depth A (1.668 - 1.688 inches).

d. Replace the jig drill bushing (24) with a jig reamer bushing (23) and ream to the bottom of the drilled hole. Check with plug gage.

e. Replace the jig reamer bushing with a jig driver bushing. Drive in a new lock pin using driver (22), until the driver shoulder contacts the face of the jig driver bushing.

f. Remove the jig. Do not disassemble the propeller shaft and fixture.

6-278. Finish Bore Front and Rear Bushings.

a. With the propeller shaft clamped to fixture (5, figure 6-61), close the fixture cover and fasten with fixture thumb screws (2).

b. Assemble boring bar, boring bar stop collar, bushing and tool bits.

c. Set the boring bar stop collar to prevent cutting into the hydromatic oil sleeve below the rear bushing.

NOTE

Prior to setting the tool bits for boring bushings, check the propeller shaft pilot journal diameters on mating chankshaft to obtain dimensions required.

d. Set tool bits with a micrometer to obtain bushing diameters that will provide a 0.0025 - 0.0045 inch loose fit between the front bushing and crankshaft front pilot journal and a 0.003 - 0.005 inch loose fit between the rear bushing and the crankshaft rear pilot journal.

NOTE

Vibro-peen bushing undersize on the end of the propeller shaft between the propeller retaining nut lock holes as shown. Example: -6 for 0.006 inch undersize. Obliterate prior undersize markings. See figure 6-61, View A.

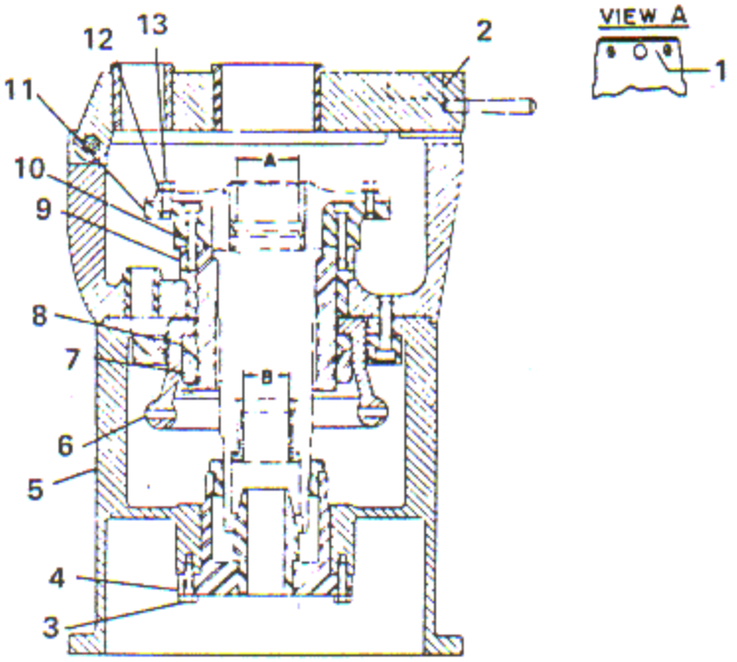

1. VIBRO ETCH AREA
2. FIXTURE THUMB SCREW
3. FIXTURE CAPSCREW
4. BUSHING E
5. FIXTURE
6. FIXTURE HANDWHEEL
7. FIXTURE NUT
8. FIXTURE WASHER
9. BUSHING C
10. PLATE SOCKET HEAD CAPSCREW
11. PLATE
12. PLATE WASHER
13. PLATE CAPSCREW

Figure 6-61. Finish Bore Front and Rear Bushings

NOTE

When boring bushings to accommodate crankshafts with standard size journals, set tool bits to obtain standard bushing inside diameter size, which is 2.6245 - 2.6255 inches for the rear bushing, and 1.9995 - 2.0005 inches for the front bushing.

e. Insert the boring bar assembly into the fixture; support boring bar with a 3/8 x 5 inch locally fabricated stop pin of drill rod in the hole provided in the boring bar.

f. Assemble a magic chuck (No. 3 Magic Chuck, Scully Jones and Co., Chicago, Illinois 60608, or equivalent) and boring bar to a drill press spindle and clamp the fixture to a drill press table.

g. Remove the stop pin and finish bore the bushings. A surface finish of 13 microinches rms or better is required on the inside diameter of the bushings. Check dimensions using standard precision measuring instruments.

NOTE

Leave the propeller shaft set up in the fixture for subsequent operations.

6-279. Bore Taper in Rear Bushings.

a. Assemble boring bar (5, figure 6-62), stop collar (7), bushing (3) and tool bit (6), as shown.

b. Insert the boring bar assembly into the fixture (12), support the boring bar with a 3/8 x 5 inch stop pin (2), locally fabricated from drill rod, in the hole provided in the boring bar. Assemble a magic chuck (1) and boring bar to a drill press spindle.

c. Set the boring bar stop collar (7) so that the top of the tool bit (6) will line up with the bottom of the original 30 degree chamfer in the rear bushing (11).

d. Set the tool bit to form a taper in the inside diameter of the bushing to the angle and depth shown.

e. Remove the stop pin and machine taper. A surface finish of 13 microinches rms or better is required. Check dimensions using standard precision measuring instruments.

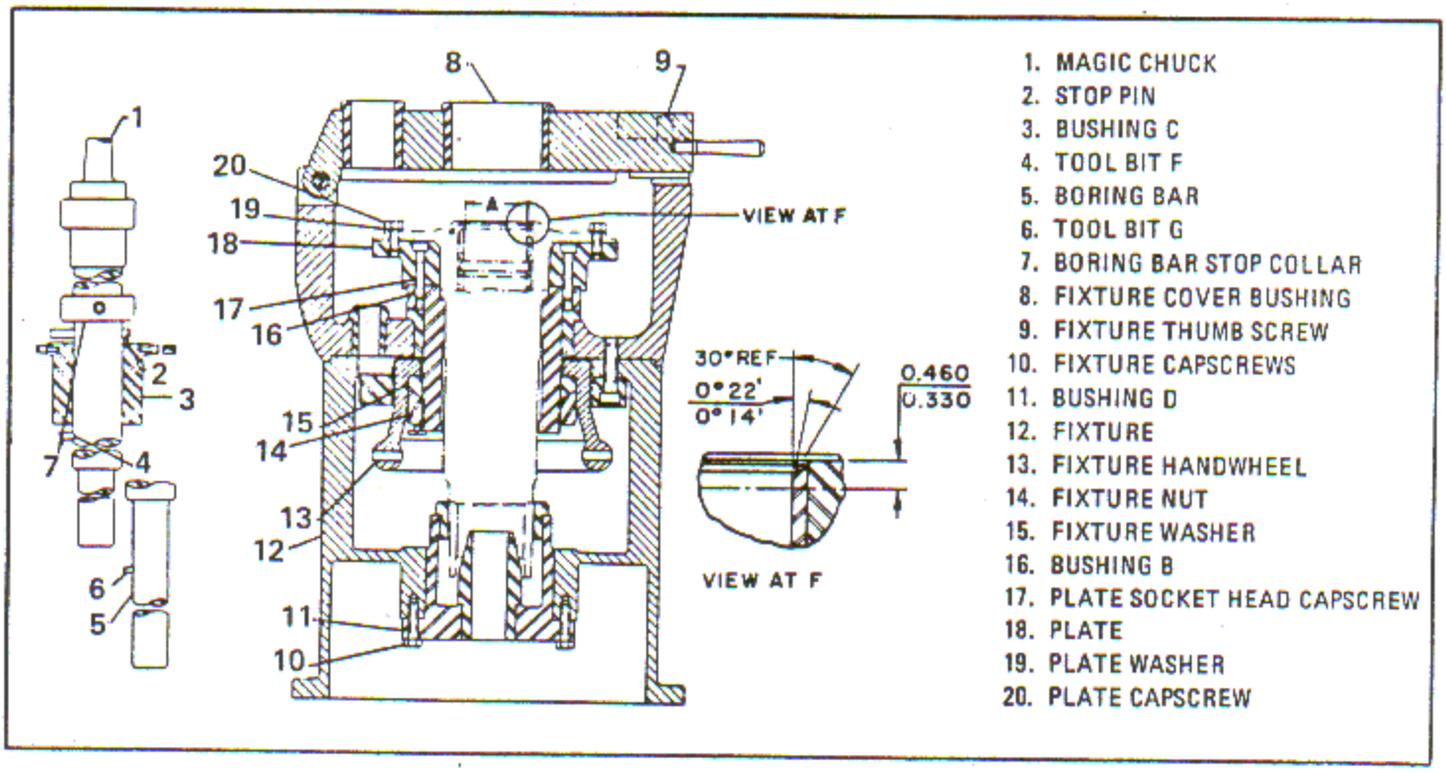

Figure 6-62. Form Taper in Rear Bushing

f. Remove the propeller shaft from the fixture.

g. Break all sharp edges 0.003 - 0.015 inch approximate radius and blend.

h. Dewax the propeller shaft by heating to 135° C (275° F). Blow out with petroleum solvent, Federal Specification P-S-661, heated to 49° C (120° F) maximum with approximately 20 psi.

i. When the tool bit requires sharpening, place in block and sharpen.

6-280. PROPELLER SHAFT SLEEVES, REWORK OF.

6-280A. Propeller shaft sleeves damaged on the outer periphery of the rear pilot diameter may be reworked as follows:

a. Utilizing a suitable mandrel, expand the rear pilot outside diameter of the sleeve. Do not expand more than 0.008 inch.

b. Magnetic particle inspect the sleeve to determine if any cracks are present.

c. Machine the outer periphery of the pilot diameter so as to ensure a 0.0015 - 0.0045 inch tight fit with the propeller shaft. Ensure that the OD of the sleeve is concentric with the adjacent ID within 0.002 inch full indicator reading.

d. Propeller shafts that exhibit wear in the rear inside diameter, not exceeding 0.001 inch, are acceptable without rework. Propeller shafts which exceed this limit shall be ground and chrome plated in accordance with paragraph 6-783.

e. Install propeller shaft sleeve in accordance with paragraph 6-264 or 6-274 as applicable.

6-281. PROPELLER SHAFT THRUST BEARING SPACERS, RECONDITIONING.

6-281A. When scored or worn, repair the internal lands of the propeller shaft thrust bearing spacers as follows:

a. Strip and lead-tin plate (silver plate if required) the internal lands as outlined in paragraphs 6-851, 6-863 and 6-864.

b. Silver and/or lead-tin plate shall be applied as necessary to provide finished inside diameters shown in figure 6-63, when 0.0004 - 0.0006 inch thickness of lead-tin plate is applied.

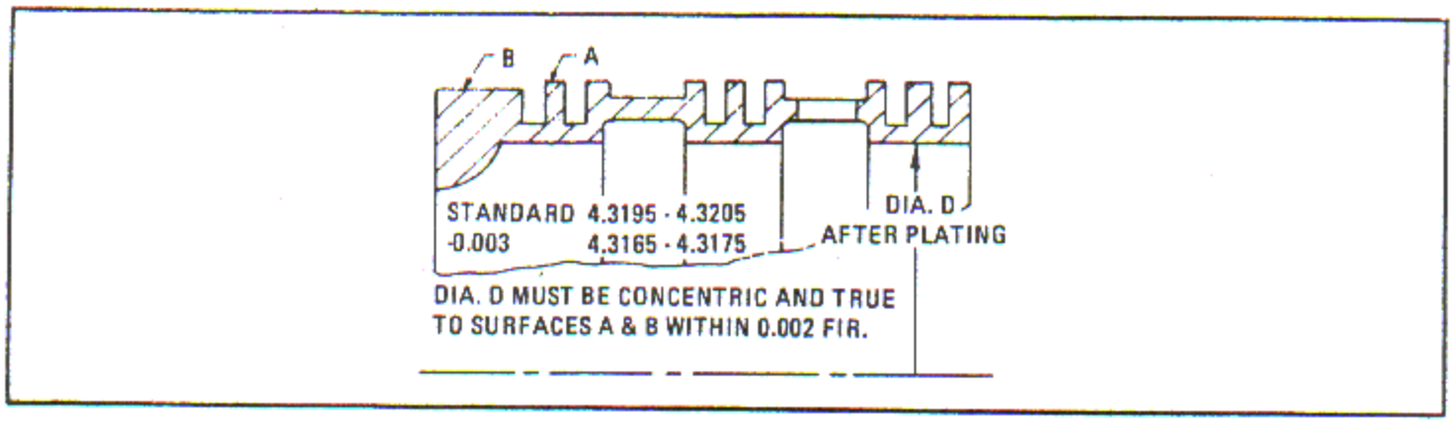

Figure 6-63. Plating Propeller Shaft Thrust Bearing Spacers

NOTE

Parts requiring machining over 4.3277 inches inside diameter prior to plating are unacceptable.

6-282. STATIONARY REDUCTION GEAR HONING (R1820-76 SERIES, -86A, -86B). (See tool group 125.)

6-283. Hone Bore of Stationary Reduction Gear.

a. Plug oil holes and passages with beeswax or paraffin, Federal Specification C-B-191 and VV-W-95 respectively.

b. Fasten stationary reduction gear to a suitable fixture (7, figure 6-64) with two fixture spacers (5) and nuts (4) as shown. Indicate ID of gear to be square, true and concentric to honing machine spindle within 0.002 inch. Clamp fixture to machine table (6).

c. Place a suitable guide (3) on reduction gear as shown.

d. Assemble head (10) and brake (1), body (2), holder (9), and stone and shell (8). Attach this assembly to machine spindle and adjust to run at approximately 89 rpm. Hone diameter A to clean up only. Maximum diameter is 4.832 inches. Obtain an 8 microinch rms or better finish. Use kerosene, Federal Specification VV-K-211, as a lubricant.

e. Gears worn beyond 4.832 inches may be chrome plated. See paragraph 6-788.

NOTE

If the ID does not clean up by honing to the maximum oversize, the gear may be further utilized by plating as instructed in paragraph 6-788.

f. Dewax gear by heating to 135°C (275°F). Blow out with kerosene heated to 49°C (120°F) with approximately 20 pounds of pressure.

6-284. STATIONARY REDUCTION GEAR RECONDITIONING (R1820-76C, -76D, -86A, -86B).

6-285. Lapping. Recondition gear as follows:

a. Recondition flange to obtain a flat mating surface by lapping with number 1700 grit lapping compound on a Lapmaster. Lap until evident the area adjacent to the oil transfer holes is flat.

b. When satisfactory sealing characteristics around the oil transfer holes cannot be obtained by lapping, flange face may be ground in accordance with paragraph 6-286.

c. Maintain the 0.255 - 0.257 inch dimension given in figure 6-64. Refer to paragraph 6-287 for rework instructions.

6-286. Grinding. Recondition gear by grinding as follows:

NOTE

This rework applies only to stationary reduction gear flanges that cannot be satisfactorily reconditioned as outlined in paragraph 6-285.

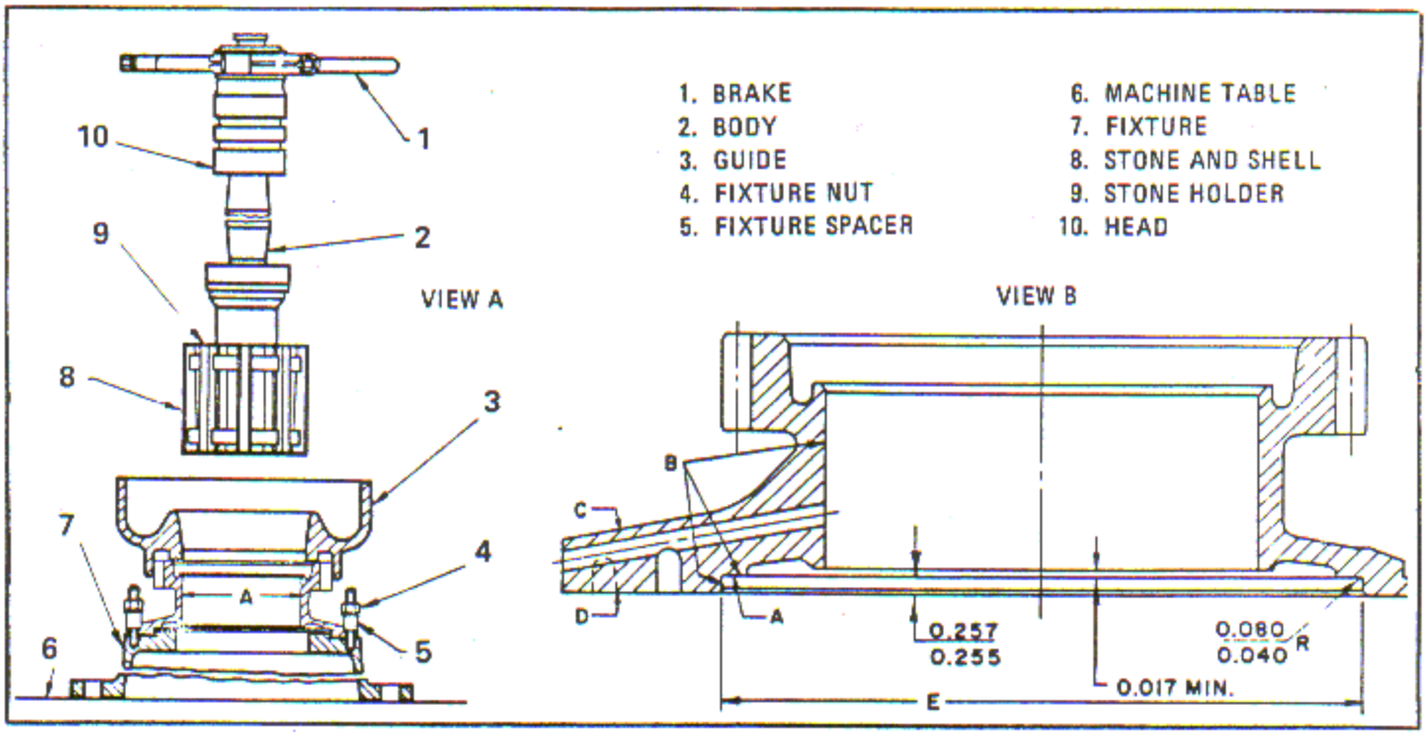

Figure 6-64. Honing Bore and Reconditioning Stationary Reduction Gear

a. Grind flange face to maintain a smooth, flat surface. Refer to paragraph 6-287 to determine if enough material may be removed from surface A of figure 6-64, view B, to obtain the required 0.255 - 0.257 inch dimension shown.

b. Flange thickness may be reduced to a minimum of 0.167 inch.

c. Required surface finish for ground surfaces is 32 microinches rms or better.

d. The reworked surface must be square and true with diameter E within 0.0015 inch full indicator reading.

e. Maintain the 0.255 - 0.257 inch dimension given. Refer to paragraph 6-287 for rework instructions.

f . Stationary reduction gear flange faces which cannot be reconditioned without exceeding the 0.225 - 0.257 inch minimum limit may be further ground, chromium plated and reground to finish dimensions in accordance with paragraph 6-788a.

6-287. STATIONARY REDUCTION GEAR - GRIND BASE OF PROPELLER SHAFT THRUST BEARING COUNTERBORE.

a. Check surface C for vibro-peening numerals indicative of previous grinding of surface A, figure 6-64, view B. If previous rework is indicated, determine maximum amount of additional material which can be removed. Total accumulated material removed from surface A shall not exceed 0.003 inch.

b. Grind material from surface A to obtain the required 0.255 - 0.257 inch dimension given. Maintain a surface finish of 32 microinches rms or better.

c. Surface D must be square and true with diameter E within 0.0015 inch full indicator reading.

NOTE

Ensure that the 0.017 inch minimum dimension is maintained after rework.

d. Ensure B surfaces are concentric, parallel, square and true as applicable to each other within 0.003 inch full indicator reading.

e. Maintain the 0.040 - 0.080 inch radius given.

f. Break sharp edges approximately 0.010 - 0.030 inch.

g. Gears which have been ground on surface A must have the amount of material removed indicated thereon, by vibro-peening appropriate numerals on surface C.

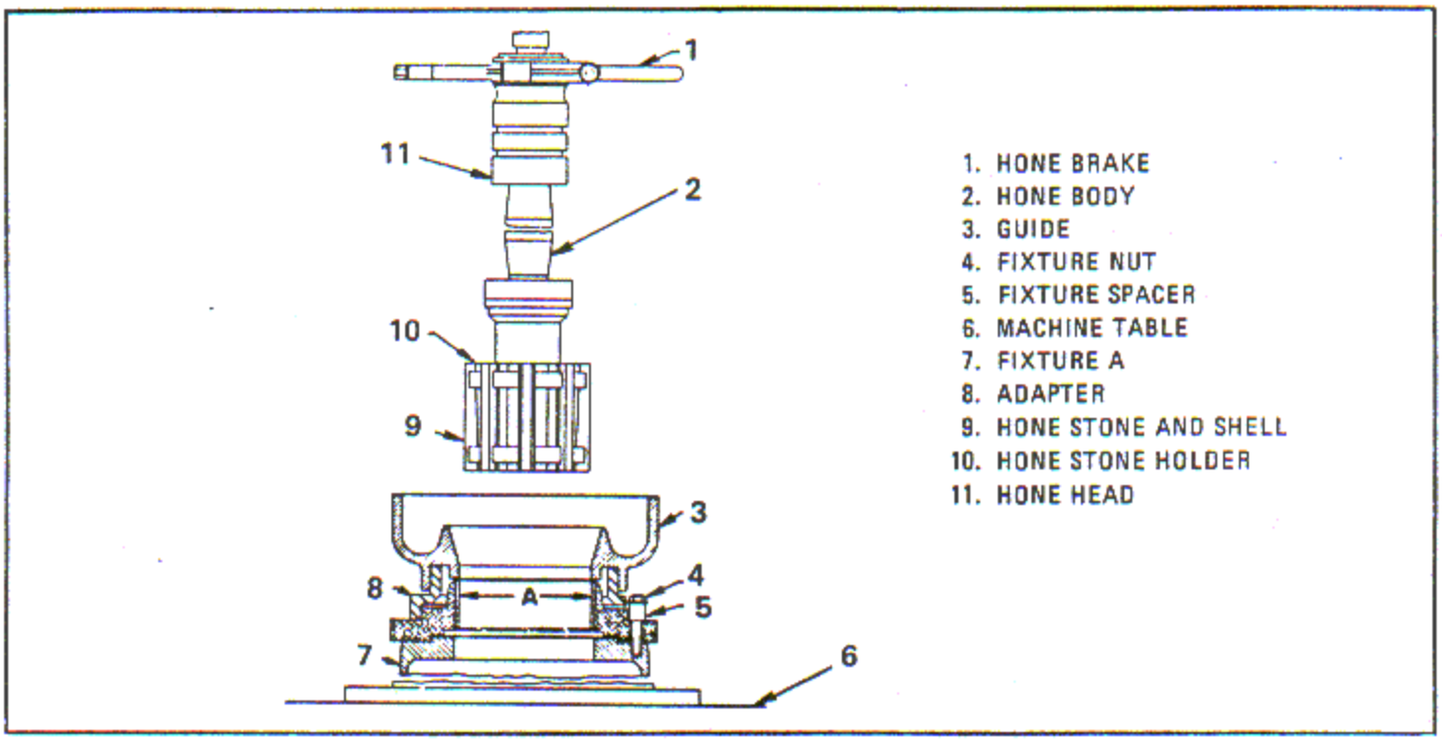

Figure 6-65. Honing Stationing Reduction Gear Support Sleeve (R1820-80 Series)

6-288. STATIONARY REDUCTION GEAR SUPPORT SLEEVE HONING (R1820-80 SERIES). (See tool group 125.)

6-289. Hone Inside Diameter of Stationary Reduction Gear Support Sleeve.

a. Plug all oil holes and passages with beeswax, Federal Specification C-B-191, or paraffin, Federal Specification VV-P-121, to prevent grit from entering.

b. Fasten the stationary reduction gear support to a suitable fixture (7, figure 6-65) with the fixture spacers (5) and nuts (4) as shown. Indicate the inside diameter of the sleeve to be square, true and concentric with the honing machine spindle within 0.002 inch full indicator reading. Clamp the fixture to the table.

c. Place adapter (8) and a suitable guide (3) on the stationary reduction gear support as shown.

d. Attach hone body (2), hone stone and shell (9), hone stone holder (10), and hone head (11) and brake (1), to the machine spindle. Adjust the spindle to run at approximately 89 rpm.

e. Hone diameter A to clean up only. Maximum diameter is 4.832 inches. Obtain an 8 microinch rms finish or better. Use kerosene, Federal Specification VV-K-211, as a lubricant.

f. Sleeves worn beyond 4.832 inches may be chrome plated. See paragraph 6-789.

6-290. STATIONARY REDUCTION GEAR SUPPORT AND SLEEVE ID, RECONDITIONING (R1820-80 SERIES). (See tool group 125.)

6-291. Remove Sleeve.

a. Press out the headed dowel pin from the assembly prior to heating.

b. Heat the assembly using standard shop practices to 121 - 148°C (250 - 300°F).

c. Place the base of plug and base under the ram of an arbor press. Place the assembly, flange face down, on the base.

d. Install the plug of plug and base and press out the sleeve.

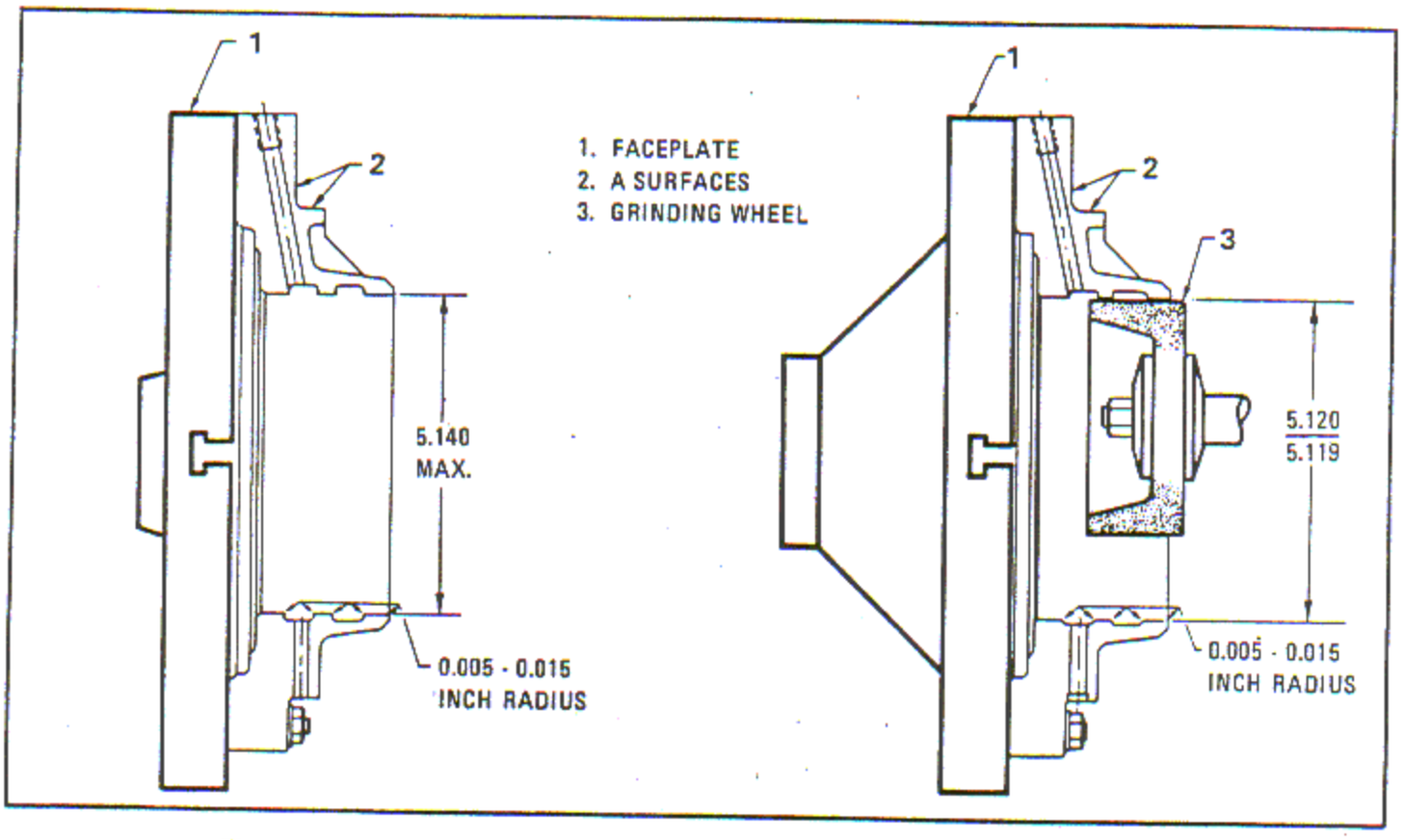

Figure 6-66. Machining and Grinding Stationary Reduction Gear Support

e. Inspect the ID of the adapter for erosion, possible bell-mouthing and other defects.

6-292. Machine Support ID.

NOTE

If the support is not damaged and the required tight fit of the sleeve in the support, as specified in the Table of Limits, can be maintained disregard the following and proceed as instructed in paragraph 6-295.

a. Plug all oil passages with beeswax, Federal Specification C-B-191, or paraffin, Federal Specification VV-P-121.

b. Mount the support on the faceplate (1, figure 6-66) of a suitable lathe. Indicate the shoulder OD and flange face, surfaces A, as shown, to run true within 0.001 inch full indicator reading.

c. Bore the ID of the support.

NOTE

Do not remove more material than necessary to clean up erosion, bell-mouthing and other defects. A maximum diameter of 5.140 inches is permitted.

d. The required surface finish on the bored ID is 20 microinches rms or better. Break all sharp edges to a 0.005 - 0.015 inch radius.

e. Dewax by immersing parts in boiling water until all wax is removed.

f. Remove from the water and immediately blow out all oil passages and excess water. Flush out the passages with a petroleum solvent.

6-293. Chrome Plate ID of Support. The ID dimension of the support will determine the thickness of chrome plate to be applied. Provide a sufficiently thick plate to allow stock for grinding the chrome plated ID to 5.119 - 5.120 inches. For chrome plating on aluminum, solutions and controls, refer to paragraph 6-869. Mask all surfaces

except the ID of the support. After plating, bake the support at 129 - 140°C (265 - 285°F) in a circulating air furnace for not less than five hours.

6-294. Grind ID of Support.

a. Plug all oil passages with beeswax or paraffin.

b. Mount the support on the face plate of a suitable internal grinder.

CAUTION

Exercise extreme care to avoid overheating. Maintain a continuous flow of coolant to prevent localized heating.

c. Indicate the shoulder OD and the flange face, surfaces A as shown in figure 6-66, to run true within 0.001 inch full indicator reading; grind to the dimension as shown.

d. Use a four inch diameter wheel (Norton 38A-60-L5-VBE, Norton Abrasives Co., Worcester 6, Massachusetts, or equivalent). Maintain a work speed of 170 rpm with a wheel speed of 5500 rpm and a copious flow of the required coolant. Refer to paragraph 6-197

e. Obtain a surface finish on the ground ID of 20 microinches rms or better. Break all sharp edges to 0.005 - 0.015 inch radius.

f. Dewax by immersing the part in boiling water until all wax is removed.

g. Remove the part from the water and immediately blow out all oil passages and excess water.

h. Flush out all passages with petroleum solvent.

6-295. Assemble Support and Sleeve.

a. Wash the parts thoroughly with petroleum solvent. Ensure that all parts are thoroughly clean, free from burrs and foreign matter.

b. Assemble the sleeve, chamfered end as shown on plug (1, figure 6-67). Locate the 0.281 inch diameter hole with the plug locating pin (4). Clamp the sleeve with the plate (3) and remove the locating pin.

c. Using standard shop practices, heat the support to 121 - 129°C (250 - 300°F) and chill the sleeve to -57°C (-70°F).

d. Install the support in base (6) with the flange end up, and place on the arbor press table.

e. Locate the 0.250 - 0.251 inch diameter reamed hole with the base locating pin (4). Install sleeve in the support and press to seat.

f. Install and seat the headed dowel pin through the 0.250 inch diameter hole in the side wall of base.

6-296. Grind ID of Sleeve.

a. Plug all oil passages with beeswax or paraffin.

b. Mount the support on the faceplate (7, figure 6-67) of a suitable internal grinding machine.

c. Indicate shoulder OD and flange face surfaces A to run true within 0.001 inch full indicator reading.

d. The ID must run true and concentric with the shoulder diameter and face within 0.001 inch full indicator reading after machining.

e. Grind the bore of the sleeve to the diameter shown.

f. Use a four inch diameter grinding wheel (Norton 38A-80-18-VBE or equivalent).

g. Maintain a work speed of 170 rpm with a wheel speed of 5500 rpm and a copious flow of the required coolant. Refer to paragraph 6-197.

h. Obtain a surface finish on the ground ID of 8 microinches rms or better. Break all sharp edges to 0.005 - 0.015 inch radius.

i. Dewax by immersing the part in boiling water until all the wax is removed. Remove from the water and immediately blow out all oil passages and excess water.

j. Flush out the passages with petroleum solvent.

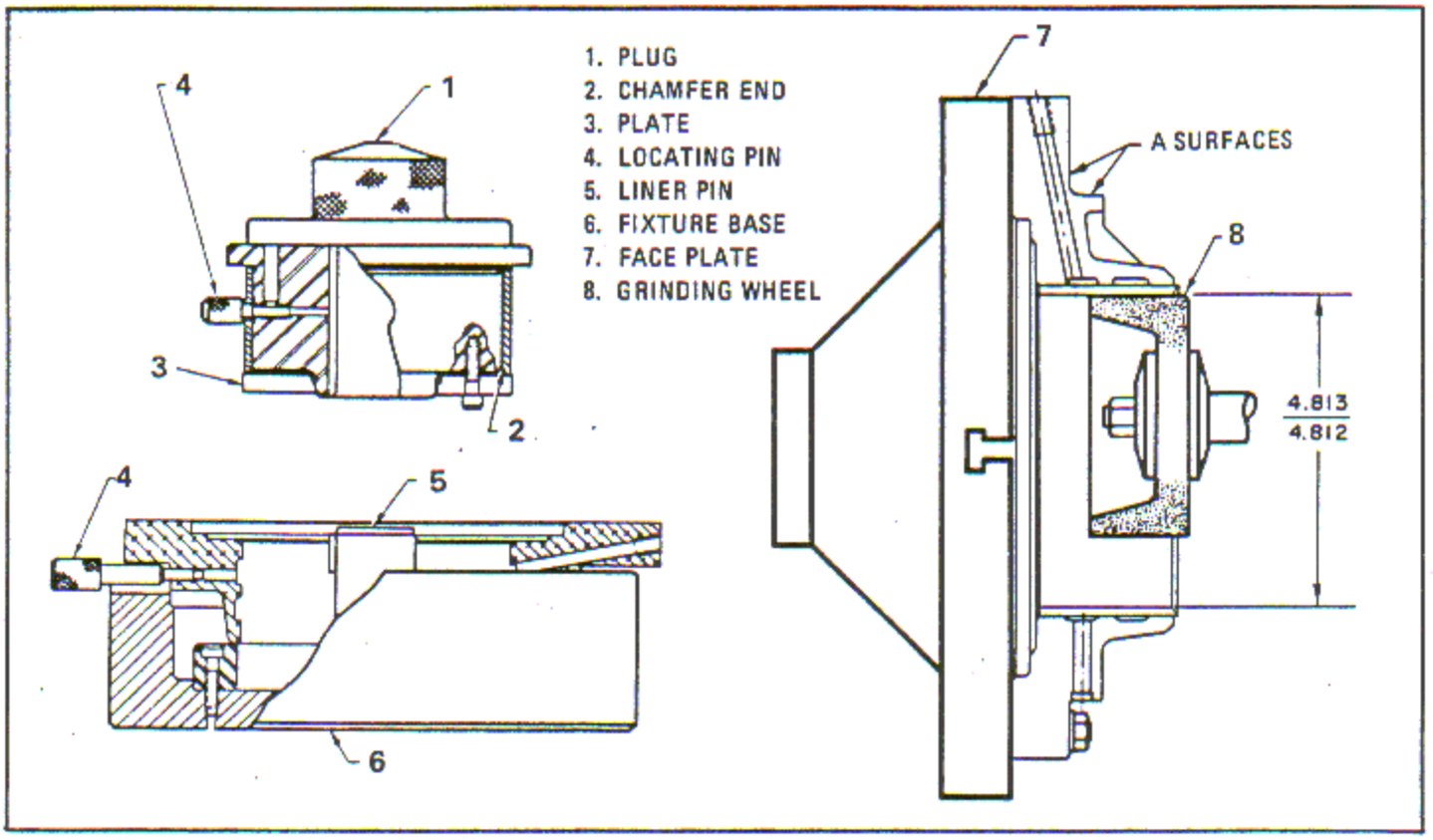

Figure 6-67. Installing and Finish Grinding Stationary Reduction Gear Support Sleeve

NOTE

Ensure that all oil passages are clean and flowing freely.

k. Blow dry with an air blast.

l. Slush or spray the part with a corrosion preventive compound.

6-297. REDUCTION GEAR PINION BORE GRINDING (R1820-80 SERIES). (See tool group 114.)

6-298. Regrind Pinion Bore.

a. Mount a universal chuck equipped with soft jaws (2, figure 6-68) on a suitable engine lathe.

b. Machine the jaws to clamp over 0.1720 diameter pitch pins (1) placed on the pinion gear as shown. Ensure that the jaw locating diameter runs true as possible within 0.0005 inch full indicator reading.

NOTE

The overwire diameter using 0.1720 diameter pitch pins is 1.679 - 1.687 inches.

c. Clamp the pinion gear in the chuck jaws using pitch pins stated above. Ensure the pinion gear and pitch pins extend approximately 1/8 inch from the jaws.

d. Indicate over the pitch pins to ensure that run-out is not in excess of 0.0005 inch and indicate gear face to run true within 0.002 inch.

e. Grind the inside diameter to clean up and lap or hone, if necessary, to obtain a surface finish of six microinches rms or better.

NOTE

Oversize bearings will be selected to obtain the specified Table of Limits fits during assembly.

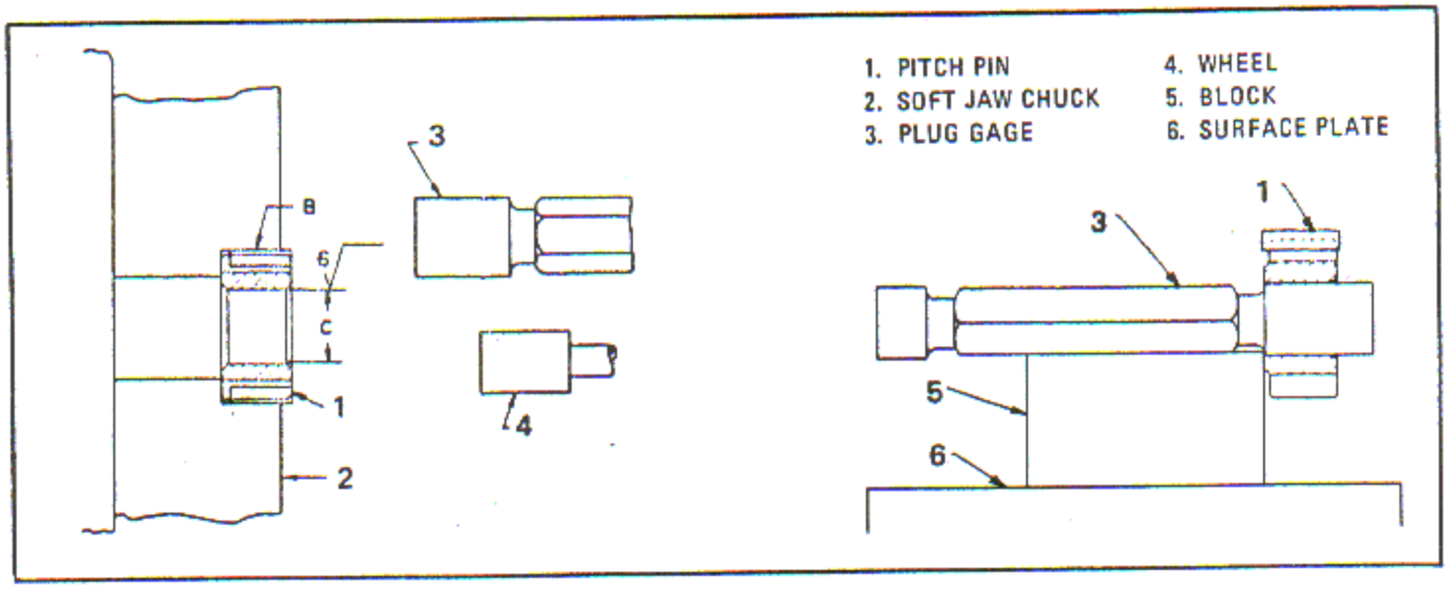

Figure 6-68. Grinding and Checking Concentricity of Pinion Bore with Pitch Diameter

f. Restore chamfer by machining to a diameter of 0.985 - 1.015 inches at a 43 - 47° angle.

6-299. Check Concentricity of Ground Hole with Pitch Diameter.

a. Check concentricity of the ground hole with pitch diameter, which is 0.0008 inch maximum full indicator reading, by clamping plug gage (3, figure 6-68) with pinion and parallel block (5) on a surface plate (6). Place 0.1720 inch diameter pitch pin on the pinion and indicate at every other tooth space with a suitable dial indicator. The pointer must locate at the same distance from the end of each tooth.

b. Bore must be square and true with pinion end face within 0.002 inch.

6-300. REDUCTION GEAR PINION CARRIER TRUNNION - GRINDING (R1820-80 SERIES).

NOTE

All reduction gear pinion carrier trunnions must be ground to the same undersize diameter.

6-301. Regrind Trunnions.

a. Plug all oil passages with beeswax, Federal Specification C-B-191, or paraffin, Federal Specification VV-P-121.

b. Place fixture (1, figure 6-69) on an internal or universal grinder faceplate (6). Insert the two fixture locating pins (3) and tighten.

c. Indicate surfaces A to run true within 0.0005 inch full indicator reading.

d. Place carrier on adapter (5), that has been chilled to -57°C (-70°F) in accordance with standard shop practices. Line up the slot in adapter central with No. 16 trunnion. Place adapter with carrier on fixture (1). Clamp lightly with capscrews.

e. Indicate trunnion of carrier to run true within 0.0005 inch full indicator reading. Tighten screws. Counterbalance the fixture in the usual manner.

f. Grind trunnion diameter B to 0.7123 - 0.7130 for 0.005 inch undersize bushing, 0.7073 - 0.7080 for 0.010 inch undersize bushing, and 0.7023 - 0.7030 for 0.015 inch undersize bushing. Check with a micrometer. Use a cup or hollow grinding wheel, Norton No. 38A80-L6VBE, or equivalent and a coolant to obtain a finish of not more than six microinches.

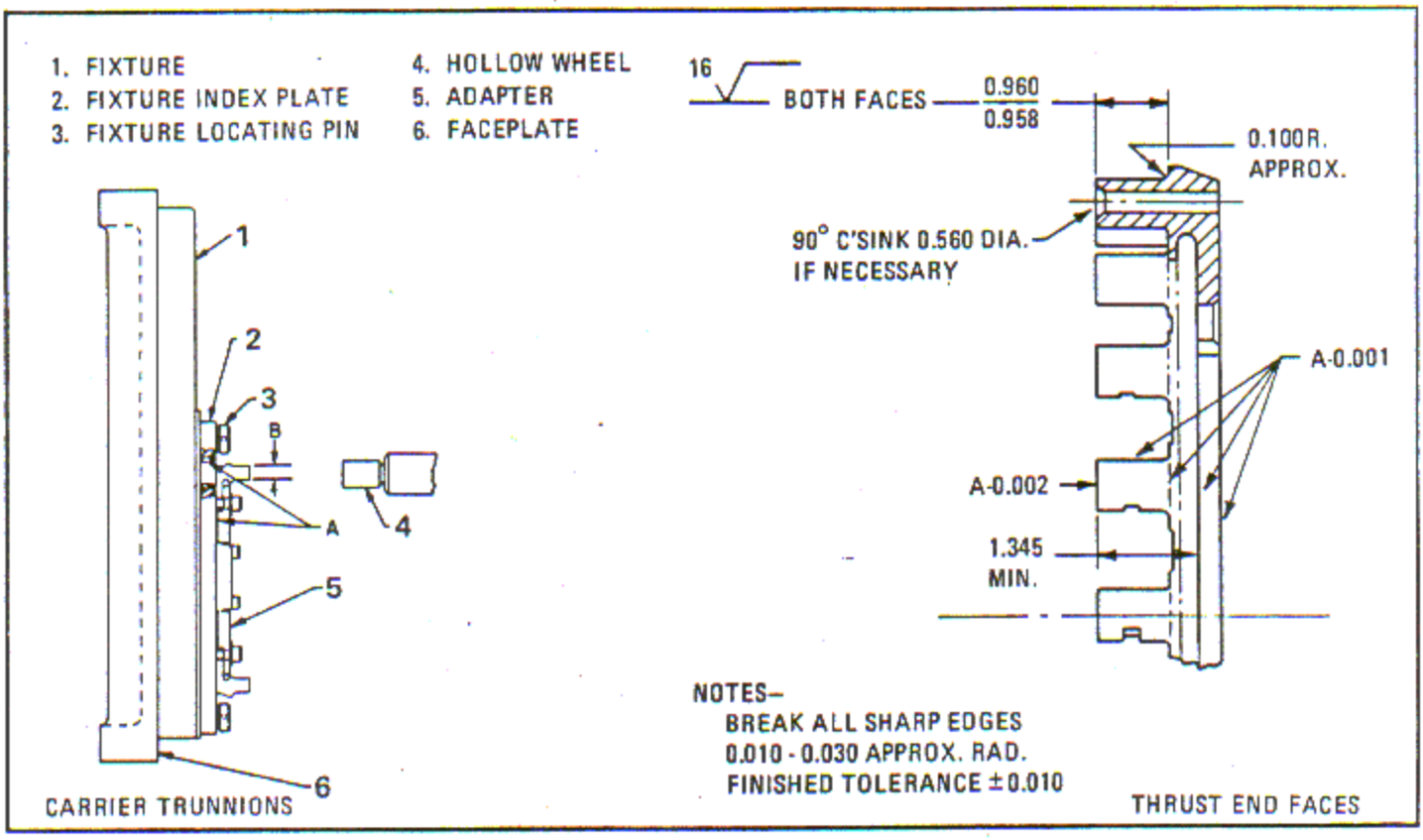

Figure 6-69. Grinding Reduction Gear Pinion Carrier Trunnions and Thrust End Faces

g. Remove the two fixture locating pins (3, figure 6-69) and turn fixture indexing plate (2) to next indexing hole. Insert the two locating pins and tighten securely. Repeat the grinding operation outlined in step f. above for the remaining trunnions. Stone or polish any sharp edges. Restore the 0.100 inch approximate radius at base of trunnions. See figure 6-70.

h. Rotate the part in hot water, making sure adapter is kept above water level so it may be removed. Do not knock adapter out.

i. Remove all beeswax or paraffin by heating carrier to 100°C (212°F). Blow out with kerosene heated to 49°C (120°F) maximum, using approximately 20 pounds pressure.

6-302. REDUCTION GEAR PINION CARRIER TRUNNION THRUST AND END FACE RECONDITIONING (R1820-80 Series)

6-303. Grind Trunnion Thrust and End Faces.

a. Grind trunnion thrust and end faces in accordance with figure 6-69.

b. After grinding the trunnion end face, measure the 90 degree countersink diameter. Remachine, if necessary, to reincorporate the required counterink, in accordance with figure 6-69.

6-304. BALANCEWEIGHT AND BALANCEWEIGHT DRIVE GEAR BORES - GRINDING (R1820-80 SERIES). (See tool group 7.)

6-305. Regrind Hole of Balanceweight.

a. Place the fixture (1, figure 6-71) on an internal or universal grinder faceplate and fasten lightly with screws in the holes provided.

b. Indicate surfaces A to run true within 0.0005 inch full indicator reading. Tighten fixture securely to the face plate. Indicate surfaces A again to ensure that the tightening operation has not altered the 0.0005 inch full indicator reading.

c. Place the balanceweight on the fixture and clamp lightly with the fixture clamp (2). Insert the fixture locating pin (5) to center balanceweight and clamp securely. Remove the locating pin.

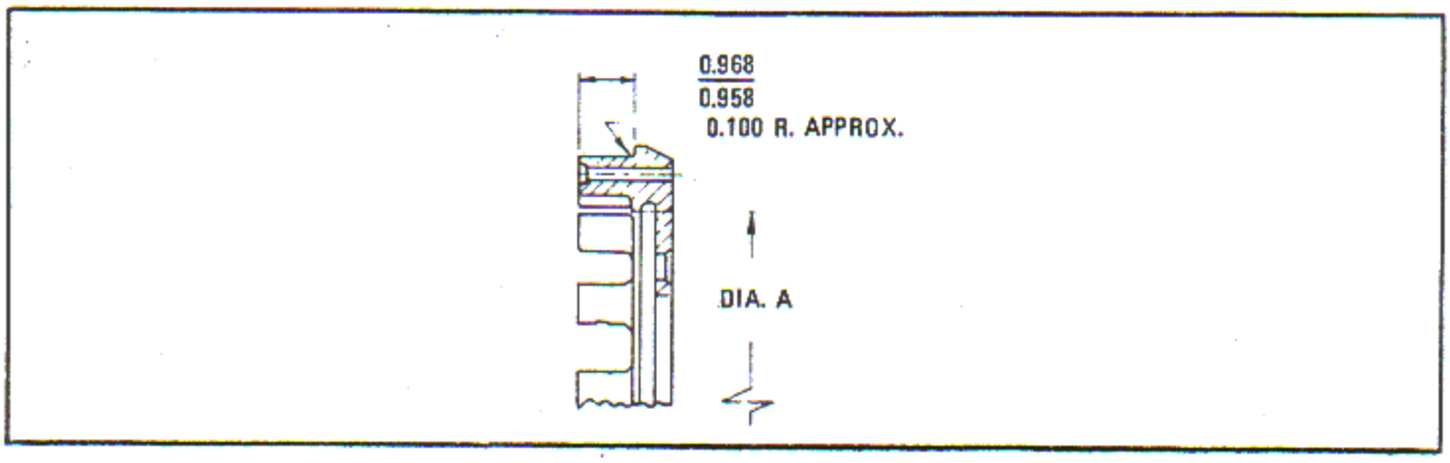

Figure 6-70. Reduction Gear Pinion Carrier Trunnion Reconditioning

d. Grind inside diameter B to the proper oversize indicated in the following list. Use a Norton Wheel, No. A-150-MV, or equivalent, and the proper coolant to obtain a surface finish of 8 to 12 microinches. Check the bore with plug gage.

Oversize	Hole Size
0.005 in.	1.067 - 1.068 in. dia
0.010 in.	1.072 - 1.073 in. dia
0.015 in.	1.077 - 1.078 in. dia

e. Remove the balanceweight and blend the opposite end of the hole from chamfer to approximately 0.020 inch radius.

6-306. Regrind Hole of Balanceweight Drive Gear.

a. Place fixture (1, figure 6-71) on an internal or universal grinder faceplate and attach lightly with the screws in the holes provided.

b. Indicate surfaces A to run true within 0.0005 inch full indicator reading. Tighten fixture securely to face plate. Indicate surfaces A again to ensure that the tightening operation has not altered the 0.0005 inch full indicator reading.

c. Place balanceweight drive gear on the fixture (1) and clamp lightly with the fixture clamp (2). Insert the fixture locating pin (5) to center balanceweight gear and clamp securely. Remove the locating pin.

d. Grind inside diameter B to the proper oversize and check with plug gage (4). Use a Norton Wheel, No. A-150-MV, or equivalent, and the proper coolant to obtain a surface finish of 8 to 12 microinches. Refer to paragraph 6-305 for listing of oversizes.

e. Remove the balanceweight drive gear and blend the opposite end of the hole from chamfer to approximately 0.020 inch radius.

6-307. CAM AND OIL SUMP PUMP DRIVE GEAR SUPPORT RING REPLACEMENT. (See tool group 8.)

6-308. Remove Cam Support Ring. Remove all cam retainer screws. Remove support ring from the cam support by tapping lightly around periphery of support ring using a fiber plug and hammer. See figure 6-72.

6-309 Install New Support Ring.

CAUTION

Handle the ring with care in order to prevent damage to the plated outside diameter.

a. Immerse the ring in oil heated to 120°C (250°F) for approximately one hour.

b. Locate the cam support on the base of fixture (5, figure 6-72), and place this assembly on an arbor press table.

c. Select a tapped hole in the outer edge of the support which will align with the stud clearance hole in the pressure plate (4) and screw a locating stud in place. Position the ring over the support with stud engaging proper hole in the ring.

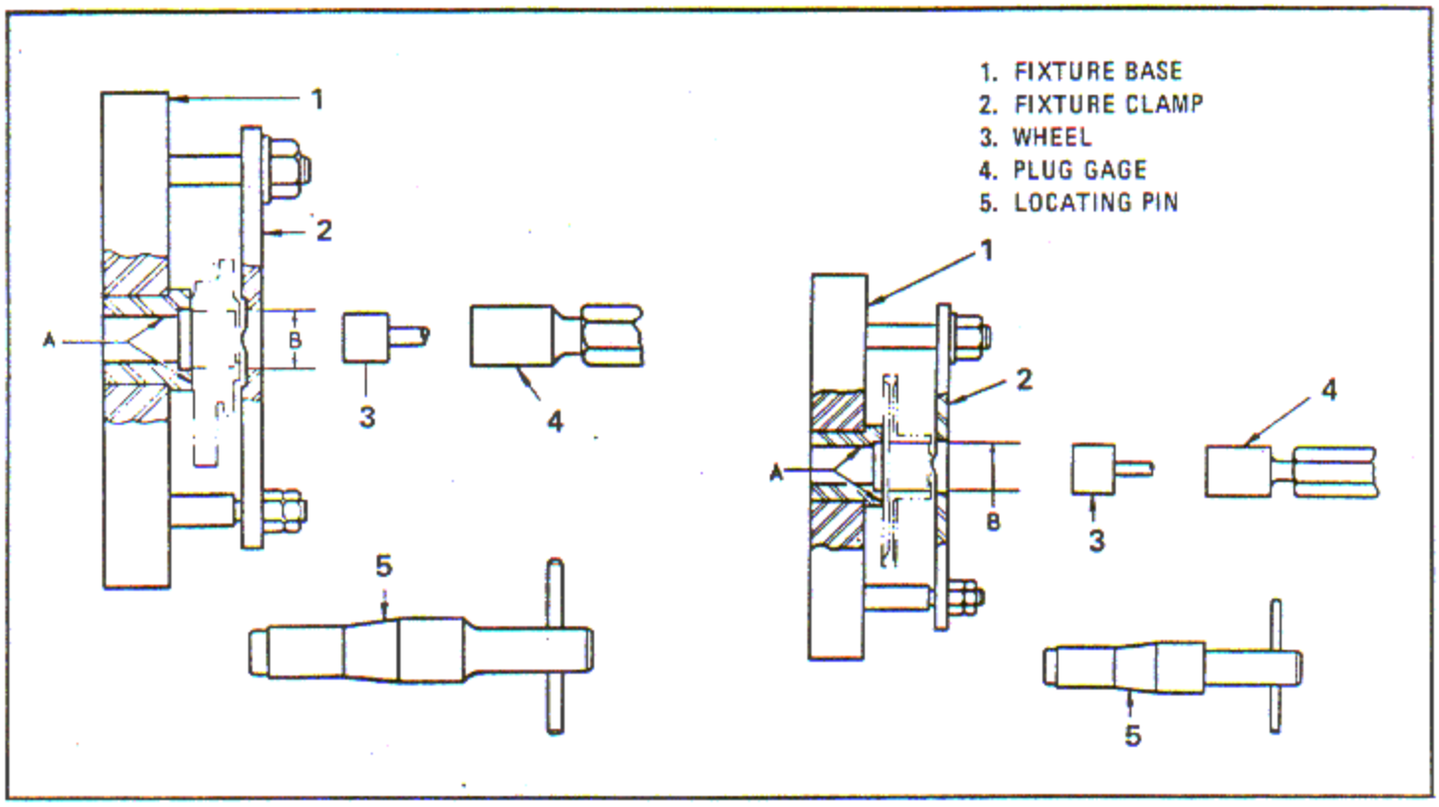

Figure 6-71. Grinding Balanceweight Bore and Drive Gear Bore

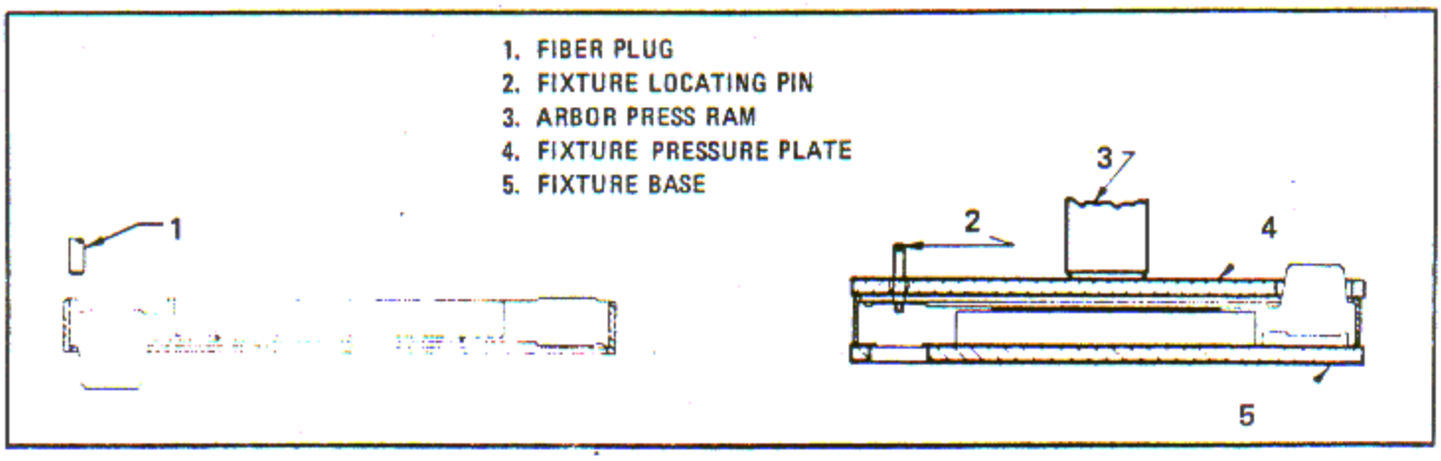

Figure 6-72. Remove and Install Cam Support Ring

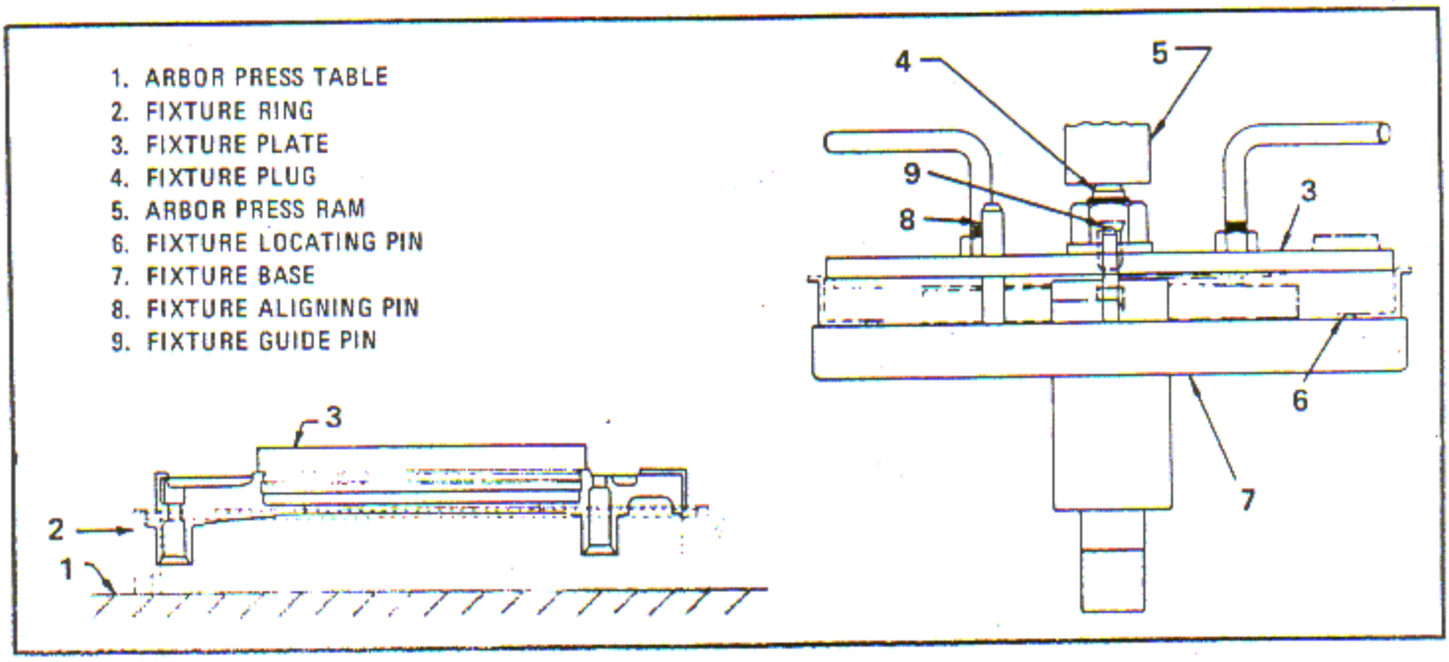

Figure 6-73. Remove Cam Bearing and Install Support Bearing

d. Press ring in place with pressure plate and maintain pressure until ring is tightly retained. Check with 0.001 inch feeler gage between the ring flange and the support to ensure proper seating of ring.

6-310. CAM AND BALANCEWEIGHTS AND OIL SUMP PUMP DRIVE SUPPORT BEARING, REPLACEMENT (R1820-80 SERIES). (See tool group 10.)

6-311. Remove Cam Bearing.

a. Place ring of fixture (2, figure 6-73) on a suitable arbor press table (1) with the large cut-out opening up. Install the support into the fixture ring, locating in the four gear trunnion cut-outs.

b. Place the fixture plate (3) properly on the support. Press fixture plate with the arbor press ram (5) until the cam bearing is free from the support.

6-312. Install New Support Bearing.

CAUTION

Handle the bearing with care so that no damage results to the plated outside diameter.

a. Before assembling, heat the bearing to 120°C (248°F) and chill the support to -57°C (-70°F) in accordance with standard practice.

b. Place the bearing on fixture base (7) which, in turn, rests on the arbor press table (1), aligning four fixture pins in the bearing holes.

c. Place the support over two fixture guide pins (9) and insert the fixture plug (4) into the fixture base (7), aligning one hole in the fixture plate (3) with the fixture aligning pin (8).

d. Press the support in the ring (2) with the arbor press ram (5) and fixture plate (3) as shown, maintaining pressure until the support is tight in the ring.

e. Check with a 0.001 inch feeler gage between the ring flange and support to ensure the ring is properly seated.

6-313. CAM AND OIL SUMP PUMP DRIVE SUPPORT BUSHINGS REPLACEMENT (R1820-76 SERIES, -86A, -86B). (See tool group 9.)

6-314. Remove Bushings.

a. Plug all oil passages with beeswax or paraffin, Federal Specification C-B-191 and VV-W-95 respectively.

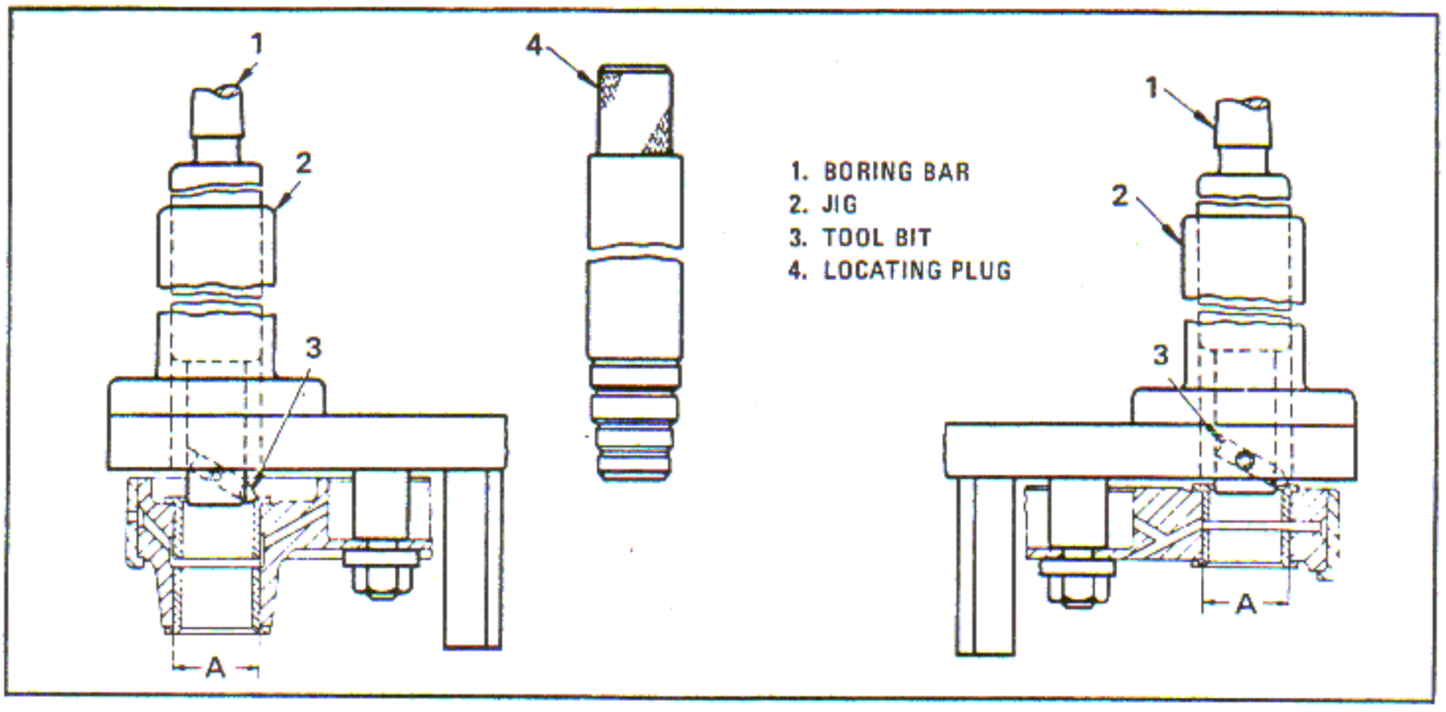

Figure 6-74. Removing Bushing

b. Clamp jig (2, figure 6-74) lightly to the support. Align the jig bushing with the cam drive gear support using plug A, which must be free in the jig and bushing hole, then clamp tightly. Align the jig bushing with boring bar (1) in the spindle and clamp the jig to the drill press table.

c. Bore out bushing in three or more cuts. Set tool bit (3) in boring bar (1), with a micrometer to obtain dimension A, which is 1.167 inches maximum for final cut, leaving a 0.010 inch wall. Pick out the remaining shell.

d. Repeat the operation for removing the oil sump pump drive gear bushing.

6-315. Rebore Bushing Holes for Oversize Bushing.

a. Clamp jig (2, figure 6-75) lightly to the support. Align jig with the bushing bore using plug A (5), which must be free in the jig (2) and housing bore, then clamp tightly.

b. Set tool bit (3) in boring bar (1) with a micrometer to obtain diameter A, which is 1.192 - 1.193 inches for 0.005 inch oversize and 1.197 - 1.198 inches for 0.010 inch oversize.

c. Align jig bushing with boring bar (1) in the spindle and clamp jig (2) to the drill press table. Bore out the support, checking with gage A (4) for a 0.005 inch oversize or gage B for a 0.010 inch oversize. Break the sharp edges.

d. Repeat the operation on the remaining bushing hole as shown.

6-316. Semi-Finish Bore Cam Drive Gear Support Bushings.

a. Place the first cam drive gear support bushing in the proper collar (2, figure 6-76). The collar used is determined by bushing size as listed following this step. Clamp the collar in the lathe chuck. Indicate the surfaces at A to run true within 0.0005 inch full indicator reading.

Collar	Bushing Size
A	Standard
B	0.005 OS
C	0.010 OS

b. Bore out the bushing to a dimension of 1.011 inch and check the hole using a standard "Y" accuracy plug gage (3) which must fit snugly. Repeat the boring operations on the second bushing.

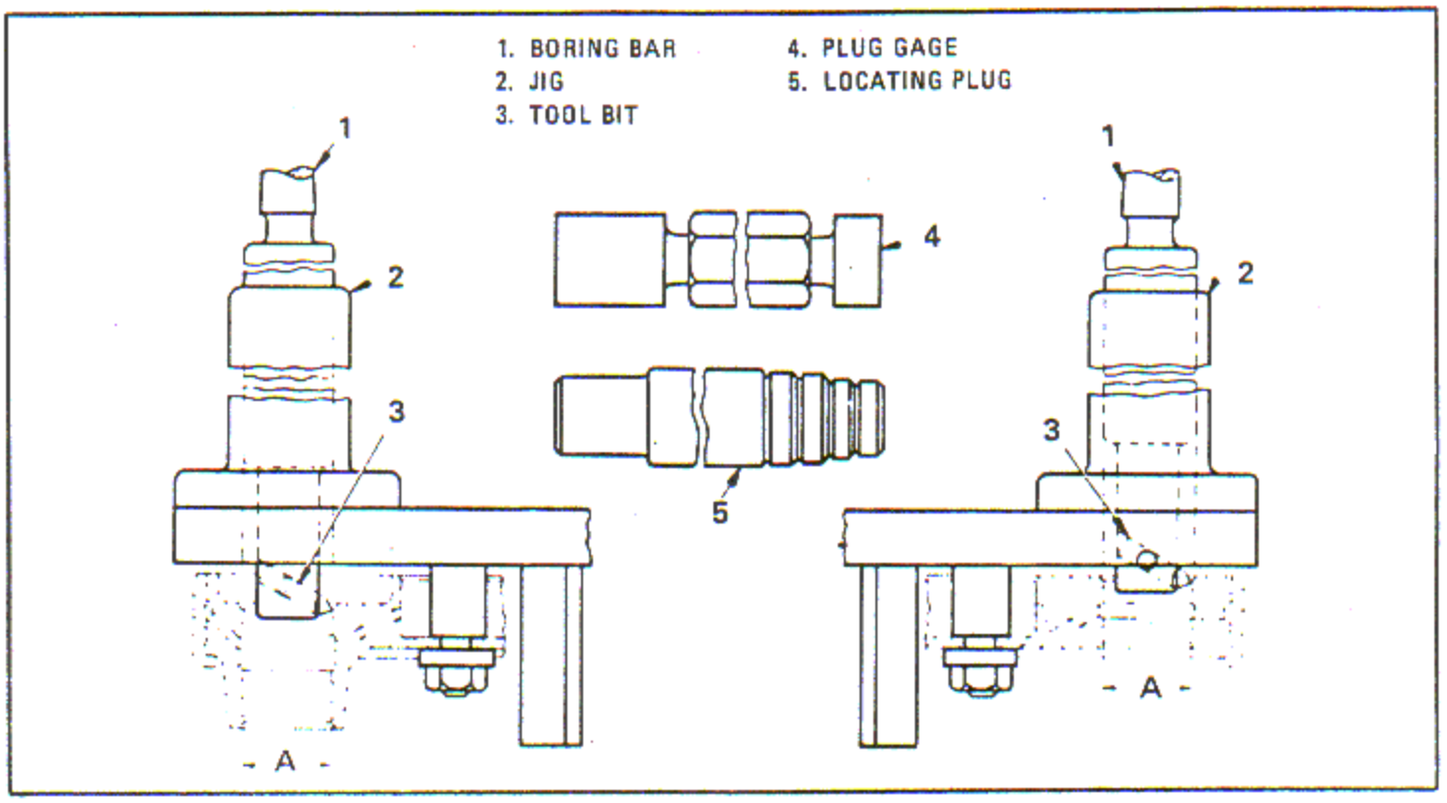

Figure 6-75. Reboring Bushing Holes

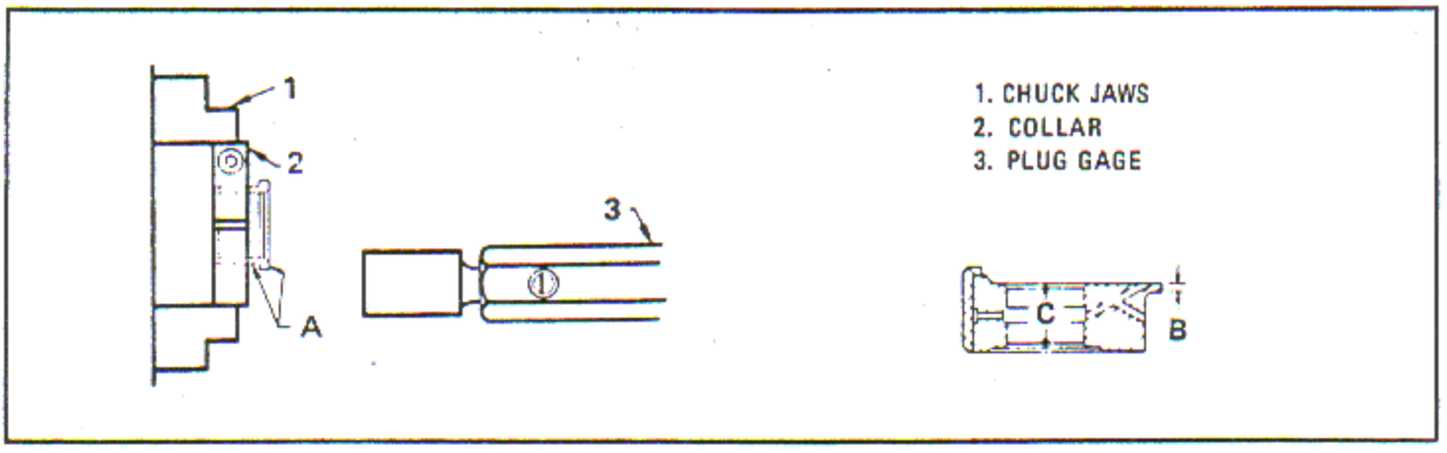

Figure 6-76. Facing Flange and Semi-Finish Boring Bushing

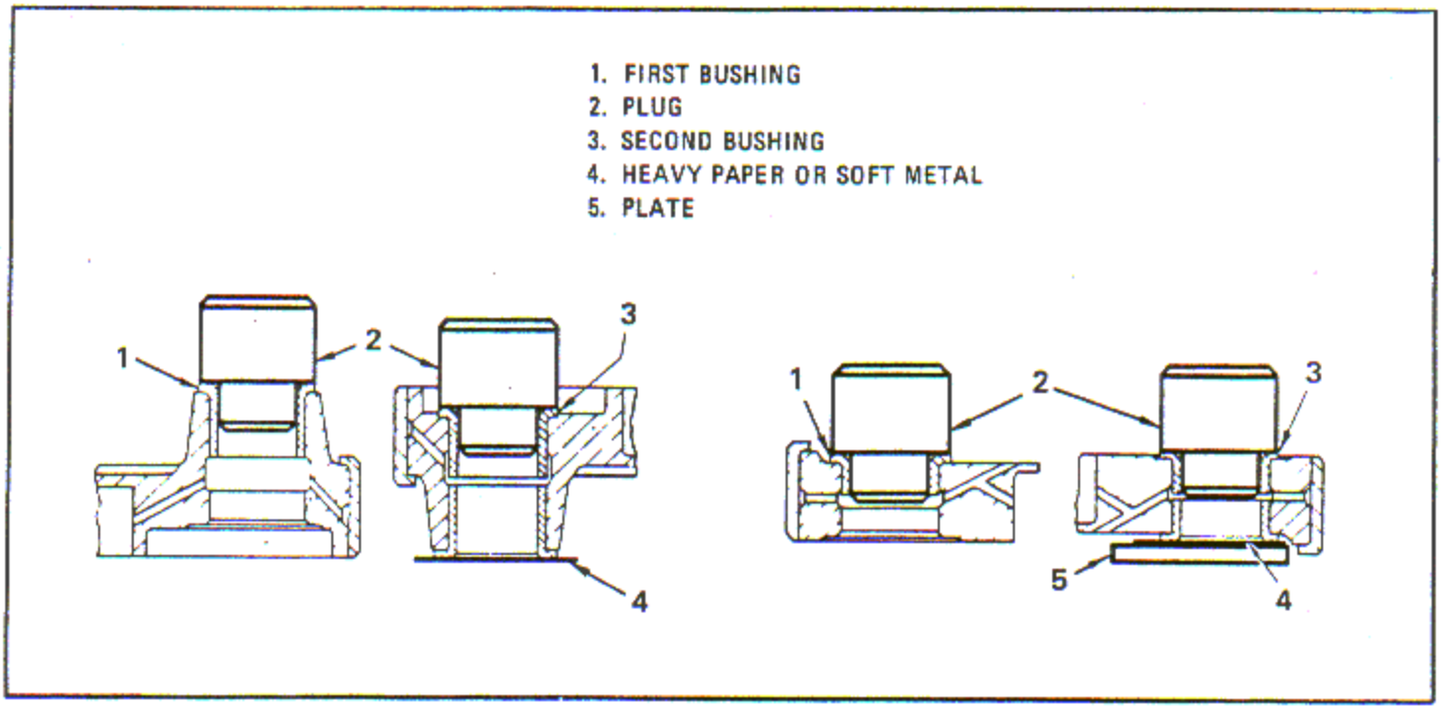

Figure 6-77. Installing Bushings

6-317. FACE FLANGE AND SEMI-FINISH BORE OIL SUMP PUMP DRIVE GEAR BUSHINGS. (See tool group 9.)

a. Place the first oil sump pump drive gear bushing in the proper collar (2, figure 6-76). The collar used is determined by the bushing size as listed following the previous operation. Clamp the collar in the lathe chuck (1). Indicate surfaces at A to run true with 0.0005 inch full indicator reading.

b. Bore out the bushing to a dimension of 1.011 inch and check the hole using a standard "Y" accuracy plug gage (3) which must fit snugly.

c. Face the bushing flange to the dimension obtained as follows. Measure the web thickness B with a micrometer and subtract this dimension from 0.179 - 0.181 inch. The result will be the finished flange thickness of the first bushing.

d. Mark the bushing and the webbed side of the support for identification during the installing operation.

e. Repeat the boring operation on the second bushing. Face bushing flange to the dimension obtained in step f.

f. Measure distance C with a micrometer. Add this dimension to the flange thickness of the first bushing and subtract the sum from 1.105 - 1.109 inches. The result will be the finished flange thickness of the second bushing.

g. Mark the bushing and the counterbored side of support for identification during the installing operation.

6-318. Install Bushings.

a. Using standard shop practices, chill the bushing to -57°C (-70°F) and heat the cam drive gear support to 149°C (300°F).

b. Press in bushings according to previously located markings, using plug B (2, figure 6-77). Protect face of the lower bushing flanges with heavy paper or soft metal (4) and use a plate (5) for supporting the last bushing.

c. Check with a feeler gage between the bushing flange and the housing to determine that the bushings are properly seated.

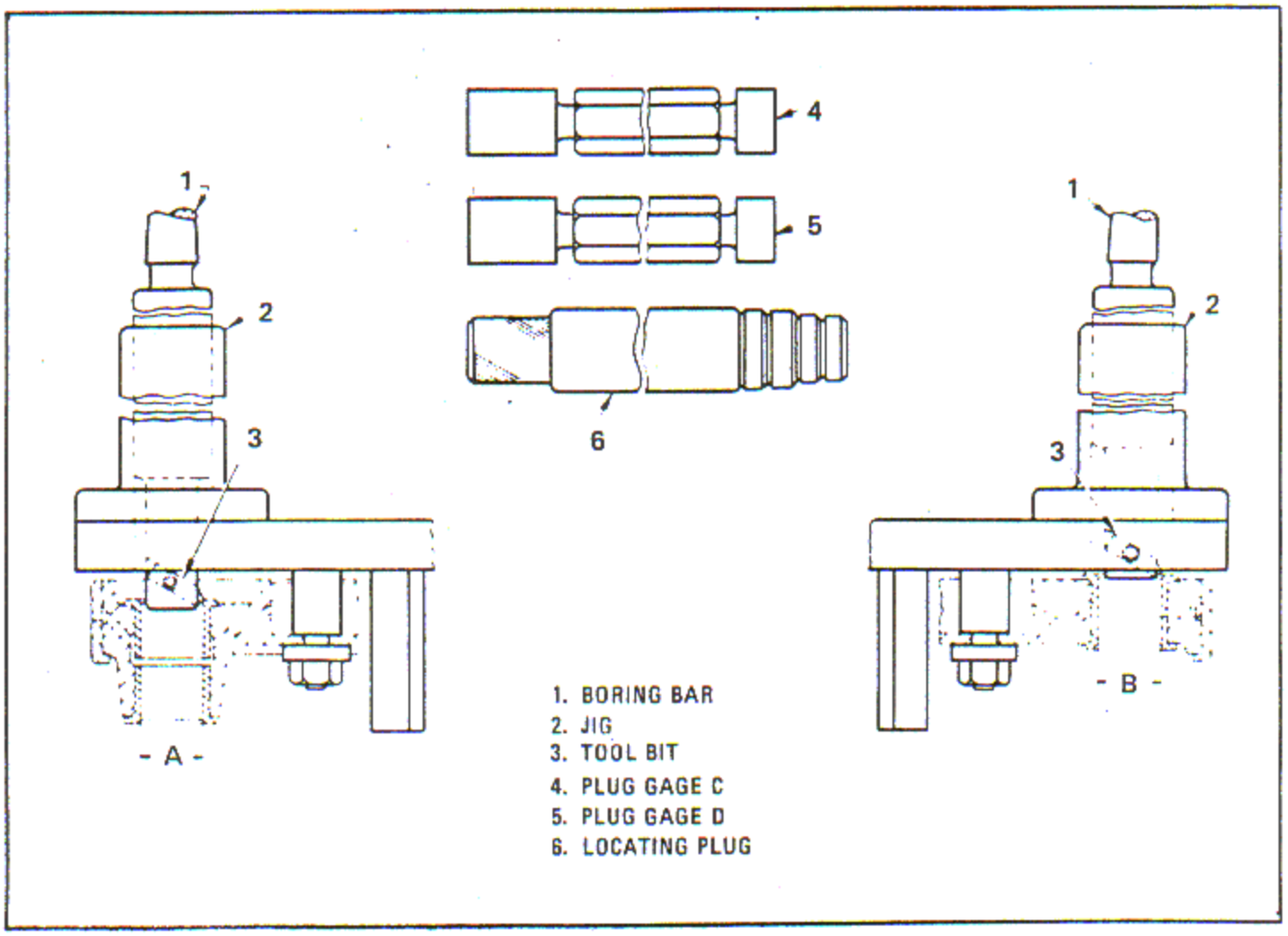

Figure 6-78. Finish Bore Bushings

6-319. Finish Bore Bushings.

a. Plug all the oil passages with beeswax or paraffin to prevent chips or grit from entering the passages.

b. Clamp jig (2, figure 6-78) lightly to the support. Align the jig bushing with the cam drive gear support bushing using plug A, which must be free in the jig and bushing hole, then clamp tightly.

c. Set tool bit (3) in boring bar (1) with a micrometer to obtain diameter A, which is 1.016 - 1.017 inches. Align jig bushing with the boring bar in the spindle and clamp jig (2) to the drill press table.

d. Finish bore the bushings, checking with gage C (4).

e. Relocate jig (2) at the oil sump pump gear drive bushings using plug A, and then clamp jig tightly.

f. Set the tool bit (3) to obtain diameter B, which is 1.015 - 1.016 inches. Locate and clamp the jig (2) and finish bore the bushings. Check the finished hole with gage D (5).

g. Break sharp edges. Dewax the support by heating it to 135°C (275°F). Blow out with kerosene heated to 49°C (120°F) with 20 pounds of pressure.

6-319A. CAM AND BALANCEWEIGHTS AND OIL SUMP PUMP DRIVE SUPPORT BUSHINGS, REMOVING AND INSTALLING (R1820-80, -80A). (See tool group 9.)

6-319B. REMOVE BUSHINGS.

a. Plug all passages with beeswax or paraffin, Federal Specification C-B-191 and VV-W-95, respectively.

b. Clamp jig (2, figure 6-74), lightly to the support. Align the jig bushing with the support bushing using locating plug, which must be free in the jig and bushing hole, then clamp tightly. Align the jig bushing with boring bar (1), in the spindle and clamp the jig to the drill press table.

c. Bore out the bushing in three or more cuts. Set tool bit (3), in boring bar (1), with a micrometer to obtain a diameter of 1.167 inches maximum for a final cut. Pick out the remaining shell.

d. Repeat the operation for removing the oil sump pump drive gear bushing.

6-319C. REBORE BUSHING HOLES FOR OVERSIZE BUSHINGS.

NOTE

Omit this operation if bushing holes in the support are not damaged or scored.

a. Clamp jig (2, figure 6-75), lightly to the support. Align the jig with the bushing bore using locating plug (5), which must be free in the jig and support bore, then clamp tightly.

b. Set tool bit (3), in boring bar (1), with a micrometer to obtain a 1.192 - 1.193 inch diameter for 0.005 inch oversize, and a 1.197 - 1.198 inch diameter for 0.010 inch oversize.

c. Align jig bushing with boring bar (1) in the spindle and clamp jig (2) to the drill press table. Bore out the support, checking with plug gage A (4), for 0.005 inch oversize or gage B, for 0.010 inch oversize. Break sharp edges.

6-319D. SEMI-FINISH BORE CAM DRIVE GEAR SUPPORT BUSHINGS.

a. Place one cam drive gear support bushing in the proper collar (2, figure 6-76), and clamp in a lathe chuck. Indicate surfaces A to run true within 0.0005 inch full indicator reading. Bore out bushing to 1.011 inch diameter.

b. Repeat this operation on the second bushing.

6-319E. FACE FLANGE AND SEMI-FINISH BORE SUMP PUMP DRIVE GEAR BUSHINGS.

a. Place the first oil sump pump drive gear bushing in the proper collar (2, figure 6-76), and clamp in the lathe chuck (1).

b. Indicate surfaces at A to run true within 0.0005 inch full indicator reading.

c. Bore out the bushing to 1.011 inch diameter.

d. Face the bushing flange to the dimension obtained as follows. Measure web thickness B with a micrometer and subtract this dimension from 0.179 - 0.181 inch. The result will be the finished flange thickness of the first bushing.

e. Mark the bushing and the webbed side of the support for identification in the installing operation.

f. Repeat the boring operation on the second bushing. Face the bushing flange to the dimension obtained as follows.

g. Measure distance C with a micrometer. Add this dimension to the flange thickness of the first bushing and subtract the sum from 1.105 - 1.109 inches. The result will be the finished flange thickness of the second bushing.

h. Mark the bushing and counterbored side of the support for identification in the installing operation.

6-319F. INSTALL BUSHINGS.

a. Using standard shop practices, chill the bushings to −57°C (−70°F) and heat the support to 149°C (300°F).

b. Press in bushings according to previously located markings using plug (2, figure 6-77). Protect face of lower bushing flange with heavy paper or soft metal (4), using a plate (5) for supporting the last bushing.

c. Check with a feeler gage between the bushing flange and housing to determine that the bushings are properly seated.

6-319G. FINISH BORE BUSHINGS.

a. Plug all passages with beeswax or paraffin.

b. Clamp jig (2, figure 6-78), lightly to the support. Align the jig bushing with the cam drive gear support bushings using locating plug (6), which must be free in the jig and bushing hole, then clamp tightly.

c. Set tool bit (3), in boring bar (1), with a micrometer to obtain a diameter of 1.016 - 1.017 inches. Align the jig bushing with boring bar in spindle and clamp jig (2) to drill press table.

d. Finish bore the bushings, checking the finished hole with the proper plug gage.

e. Relocate jig (2), at the oil sump pump gear drive bushings using locating plug (6), which must be free in jig and bushing hole, then clamp tightly.

f. Align the jig bushing with the boring bar (1) in the spindle and clamp the jig to the drill press table.

g. Finish bore bushings to A diameter of 1.015 - 1.016 inches, checking the finished hole with the proper plug gage. Break sharp edges.

h. Dewax the support by heating to 135°C (275°F). Blow out with kerosene heated to 49°C (120°F) maximum with approximately 20 pounds of pressure.

6-320. CAM AND BALANCEWEIGHTS AND OIL SUMP PUMP SUPPORT TRUNNIONS GRINDING (R1820-80 SERIES). (See tool group 8.)

6-320A. Prior to grinding the trunnions, remove the cam drive intermediate gear bushings and the oil sump pump drive gear bushings from the support. The holes without the bushings are used to locate the support on the fixture.

6-321. Recondition Balanceweight Drive Gear Trunnions.

a. Mount fixture (1, figure 6-79) to the faceplate of a suitable internal or universal grinder. Indicate the fixture C surfaces to run true within 0.001 inch full indicator reading. Tighten the fixture sufficiently to maintain its position.

b. Plug all oil passages in the support with beeswax, Federal Specification C-B-191, or paraffin, Federal Specification VV-W-95.

c. Place the support on the fixture locating plug (4, figure 6-79) and pin (3), positioning the least worn trunnion over the machine center for grinding. Clamp the support tightly with the fixture clamp (5).

d. Indicate the unworn area of the trunnion outside diameter, thrust and end faces (surfaces A) to run true within 0.001 inch full indicator reading. Adjust the fixture base (6) on the machine faceplate as required to obtain this reading. Tighten the fixture securely to the faceplate.

NOTE

If necessary, counterbalance the fixture using suitable weights as required.

e. Dress a hollow or cup type grinding wheel (Norton Specification No. 38A80-L6VBE, Norton Company, 35 New Bond Street, Worcester 6, Massachusetts or equivalent) to have a 0.070 - 0.090 inch inside corner radius. Grind the trunnion to the applicable diameter B and clean up

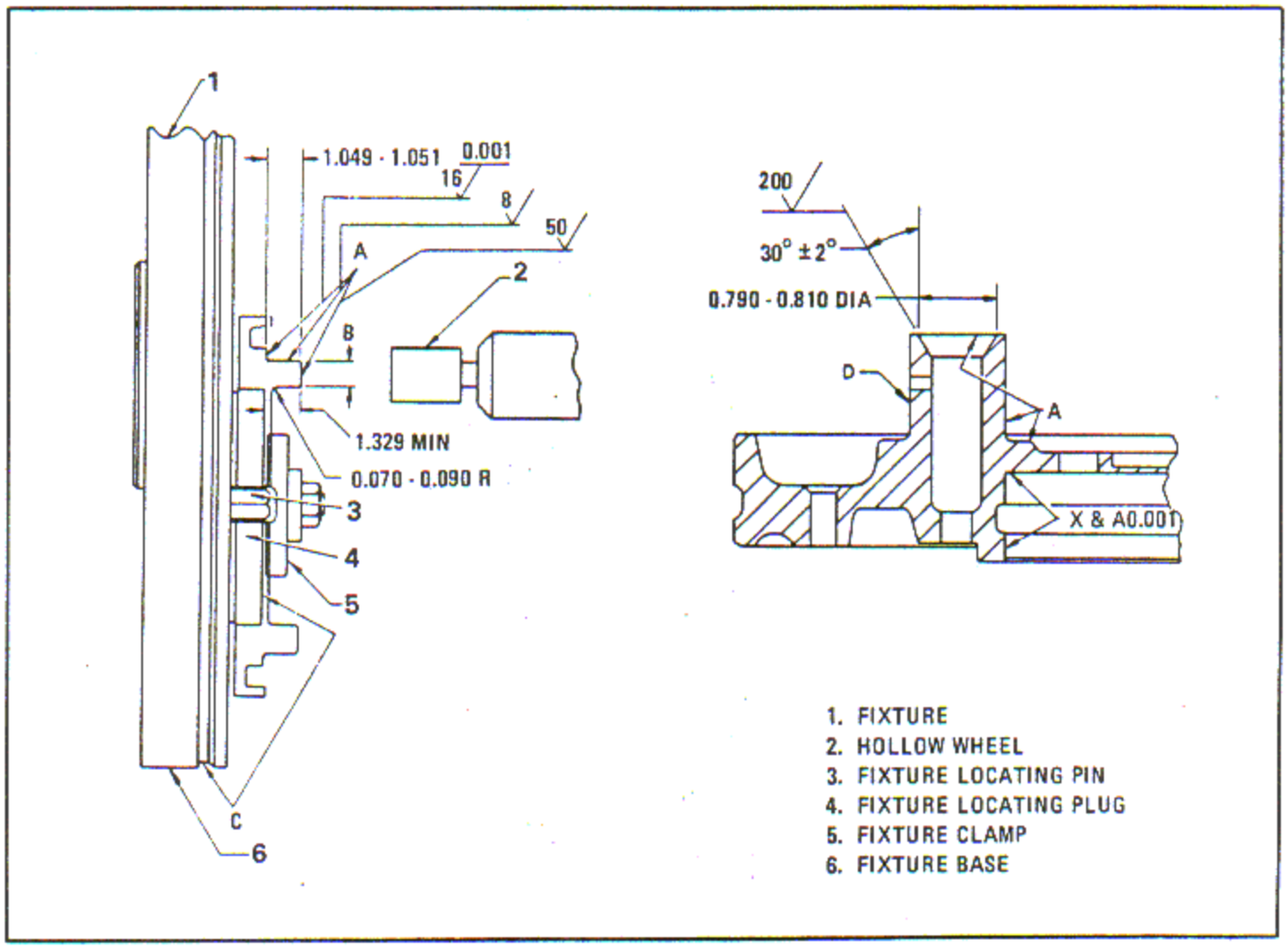

Figure 6-79. Balanceweight Drive Gear Trunnion Reconditioning Limits

the thrust and end faces maintaining the dimensions shown. Allow approximately 0.0005 inch of stock on the trunnion OD for hone or polish finishing. Grind the shoulder and the trunnion end for the finish indicated.

Bushing ID Undersize	Bushing ID	Trunnion B Diameter
-0.005	0.933 - 0.934	0.930 - 0.931
-0.010	0.928 - 0.929	0.925 - 0.926
-0.015	0.923 - 0.924	0.920 - 0.921

f. If necessary, machine the trunnion to maintain the 58 - 62 degree included inside angle to a diameter of 0.790 - 0.810 inch as shown in figure 6-79.

g. Using standard equipment, hone or polish the trunnion outside diameter to obtain a surface finish of 8 microinches rms or better.

h. Index the support 180 degrees on the fixture to position and regrind the opposite trunnion.

i. Magnetic particle inspect the support as instructed in paragraph 6-26. Check the surface finish and dimensions using standard inspection equipment.

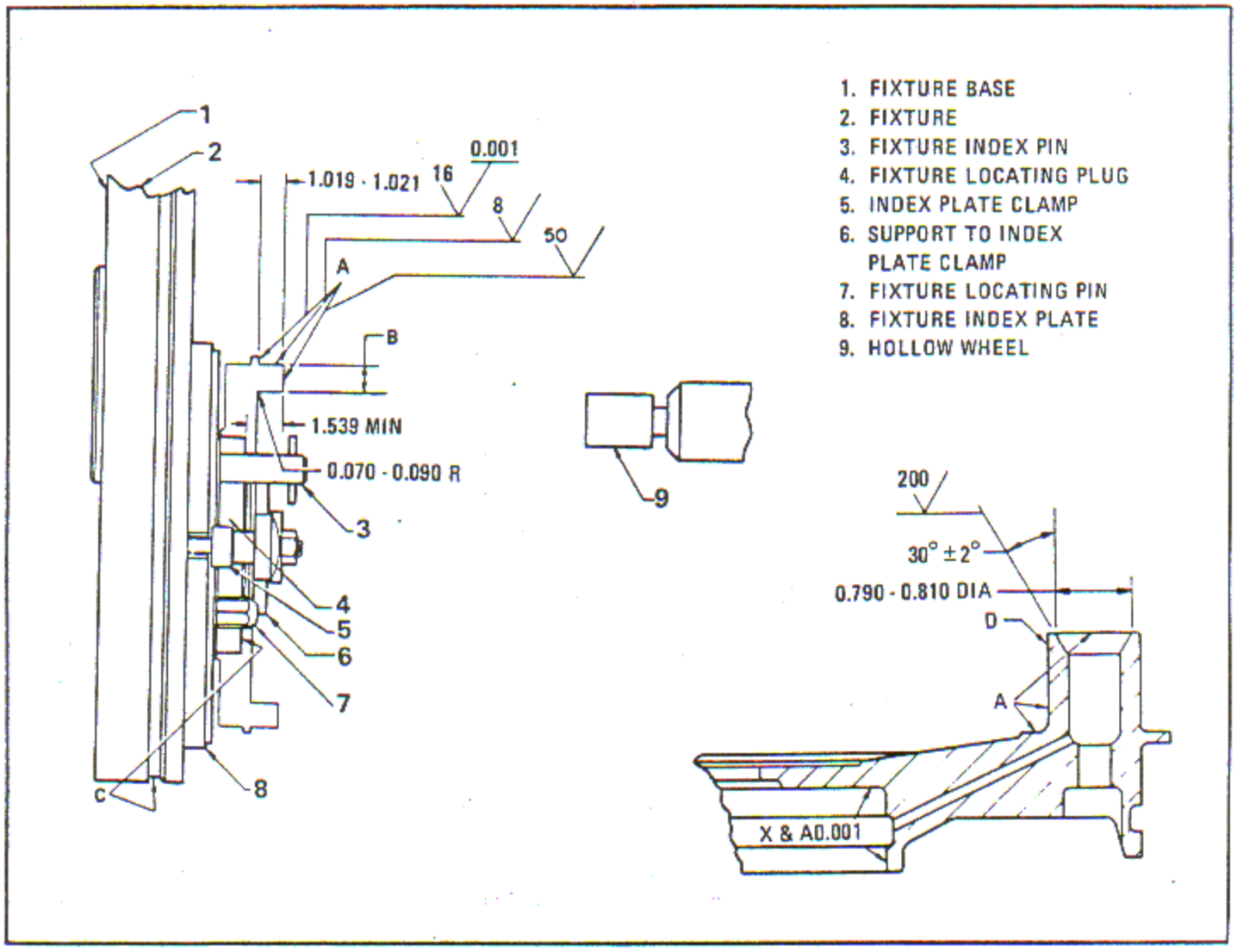

Figure 6-80. Balanceweight Trunnion Reconditioning Limits

NOTE

The 1.329 inches minimum controlling dimension shown must not be exceeded. The two trunnion outside diameters D must be located within 0.001 inch of true position in relation to diameter X. Surfaces A must be concentric, parallel, flat, square and true (as applicable) to each other within 0.002 inch full indicator reading.

6-322. Recondition Balanceweight Trunnions.

a. Mount fixture (2, figure 6-80) to the grinder faceplate. Indicate the fixture C surfaces to run true within 0.001 inch full indicator reading. Tighten the fixture sufficiently to maintain its position.

NOTE

Ensure that the indexing plate (8) is secure on the fixture base (1).

b. Place the support on the fixture locating plug (4) so that the fixture locating pin (7) enters the oil sump pump drive gear bushing hole in the support. Clamp the support tightly to the indexing plate (8).

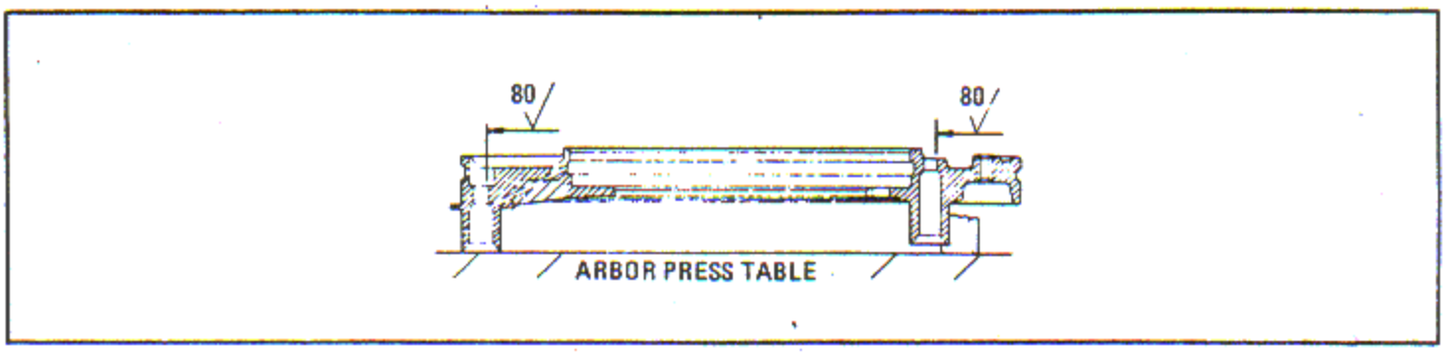

Figure 6-81. Ream Balanceweight and Gear Retaining Bolt Holes

c. Choose the least worn trunnion on the support and position it over the machine center for grinding. Insert the fixture indexing pin (3, figure 6-80) through the cam drive intermediate gear bushing hole and the index plate (8) into the bushing in the fixture base (1). Twist the index pin (3) to lock it in place as shown. Tighten the indexing plate clamps (5).

d. Proceed as instructed in paragraph 6-321, steps d, e, f and g.

e. Loosen the index plate clamps (5). Remove the index pin (3), turn the plate (8) to the next required position and reinstall the pin. Tighten the clamps and grind the trunnion.

f. Repeat this procedure on the remaining trunnions.

g. Magnetic particle inspect the support. Refer to paragraph 6-26. Check the surface finish and dimensions using standard inspection equipment.

NOTE

The 1.539 inches minimum controlling dimension shown must not be exceeded. The four trunnion outside diameters D must be located within 0.001 inch of true position in relation to diameter X. Surfaces A must be concentric, parallel, flat, square and true (as applicable) to each other within 0.002 inch full indicator reading.

i. Install the cam drive intermediate gear bushings and the oil sump pump drive gear bushings in the support as directed in paragraph 6-318.

6-323. CAM AND BALANCEWEIGHTS AND OIL SUMP PUMP DRIVE SUPPORT, BALANCEWEIGHT AND GEAR RETAINING BOLT HOLES, OVERSIZE REAMING (R1820-80 Series).

6-324. Ream Balanceweight and Gear Retaining Bolt Holes.

a. Place the support on a suitable drill press table with the trunnions face down. Indicate the counterbore face at the retaining bolt hole and the hole to be reamed to run true and square with the spindle within 0.001 inch full indicator reading.

b. Select and install one of the reamers, group 8, which is capable of cleaning up the hole to the nearest oversize, as listed, with an 80 microinch rms or better finish. Refer to figure 6-81.

c. Ream the hole at 900 rpm, and a 0.003 inch feed per revolution with a full flow of coolant, blend No. 8, paragraph 6-197.

d. Break sharp edges 0.010 - 0.030 inch approximate radius and blend.

Oversize Hole Dia	Oversize Bolt
0.3483 - 0.3493 in.	0.3498 - 0.3503 (+0.005 in.)
0.3533 - 0.3543 in.	0.3548 - 0.3553 (+0.010 in.)
0.3583 - 0.3593 in.	0.3598 - 0.3603 (+0.015 in.)

6-325. CAM TRACKS, VAPOR BLASTING PROCEDURE.

a. Mix approximately 50 pounds of grade 2F aluminum oxide grit size 320-400, (American Graded Sand Co., 189 East 7th Street, Paterson, N.J.) with four ounces of No-Pak and eight ounces of Metrolux, (Vapor Blast Co., Milwaukee, Wisc.) and a suitable amount of water to make a mixture of three parts liquid to one part solid.

NOTE

Alternate material for vapor blasting cam tracks - 50/50 mixture of decompressed rock abrasive grit size 100 and 200.

b. Place entire contents of mixture in the hopper of a suitable vapor blast cabinet. Thoroughly mix the contents prior to vapor blasting cam track.

c. Mask all portions of the cam except surfaces to be vapor blasted.

d. Vapor blast the valve cam tracks. Use a spray gun model S, (Vapor Blast Co.) having a 3/8 inch discharge nozzle and a 5/32 inch air inlet jet. Maintain air pressure at 90 psi.

e. Keep the spray nozzle moving while spraying, and approximately three inches away from the work. Spray until a satin frost finish is obtained.

f. Clean and inspect the vapor blasted surface to ensure that a surface finish of 16-25 microinches rms is obtained. Inspect for spalling, nicks or dents.

g. Remove all masking and thoroughly wash the cam.

h. Slush the cam in external corrosion preventive compound, Military Specification MIL-C-6529, Type II.

6-326. CRANKCASE CYLINDER DECK GRINDING. (See tool group 18.)

6-327. Preparation.

a. Place the crankcase in a horizontal position on a bench or on the floor, being careful to protect finished surfaces on the bottom side.

b. Place arbor (9, figure 6-82) of grinder in the position shown, suspended with the aid of a sling. Install front centralizing ring (11) and rear centralizing ring (11) in their respective position.

NOTE

Rings are passed into the crankcase through deck holes while open.

c. Using a suitable sling (8), hoist the arbor (9) and crankcase assembly onto the grinder stand and position with both ends of the arbor projecting equally from the support.

NOTE

When lifting, keep the arbor and crankcase level to prevent rings from slipping.

d. Remove sling and clamp the arbor tightly, ensuring that pilot holes remain in a vertical position.

6-328. Cylinder Deck Grinding.

a. Position one cylinder deck horizontally, at the top of the crankcase. See figure 6-82.

CAUTION

Grinding wheel should be in a raised position to avoid contact with the crankcase deck.

b. Attach a hoist to the grinder eye (1) and lower the grinder through the top deck hole to position pilot in arbor pilot hole, and centralizer (7) in cylinder deck hole. When grinder is supported on arbor deck, remove hoist.

c. Rotate the grinder centralizer (7) to position the hole directly above the arbor (9) to permit use of gage (5). Adjust centralizer vertically by adjusting the collar located directly below centralizer.

d. Attach a dial indicator in the mount provided (18). Indicate the deck surface. Equalize the readings as closely as possible using the finger adjustments provided in the centralizer flange and secure adjustments to prevent rotation of centralizer during grinding.

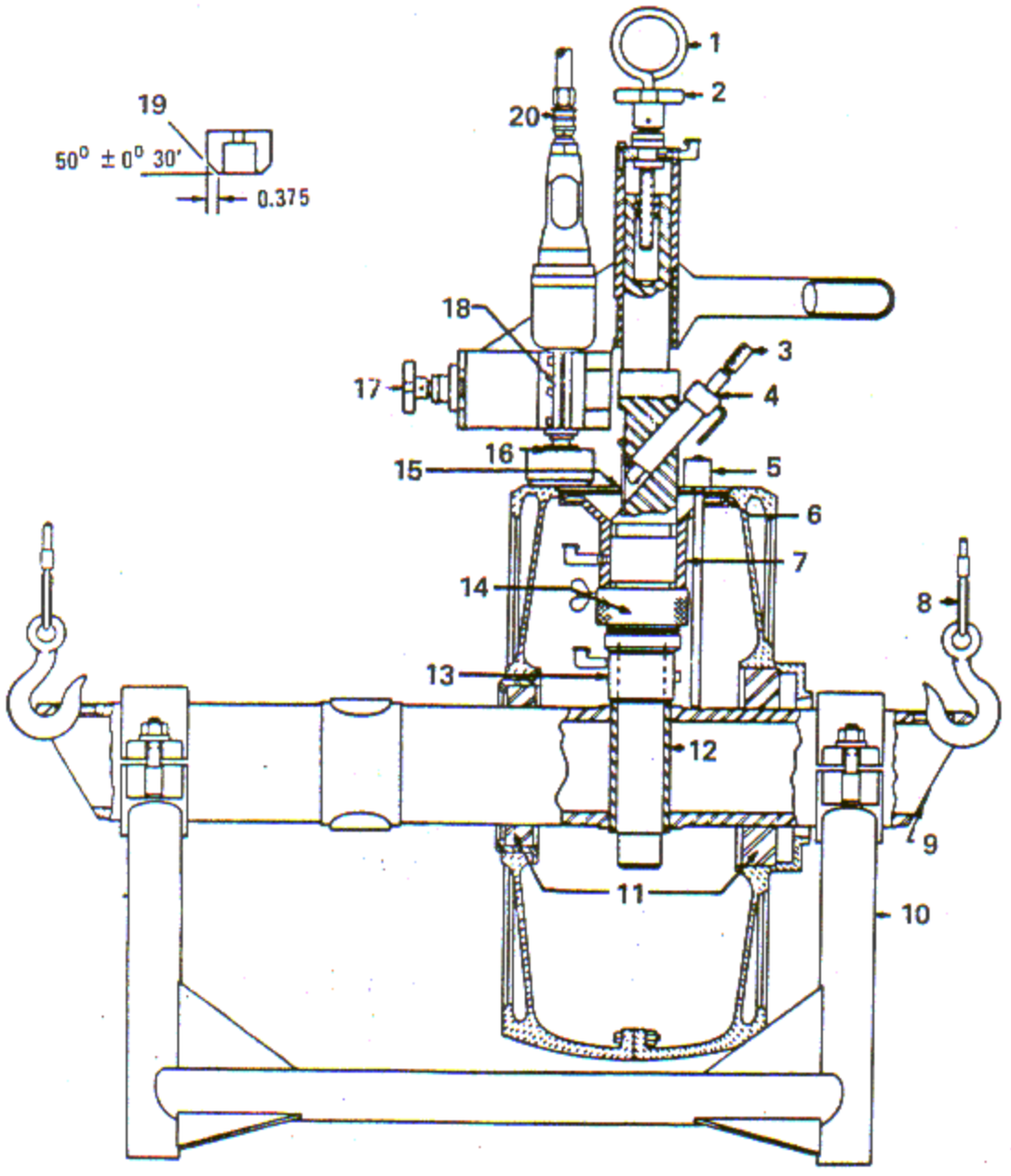

1. EYE
2. VERTICAL HAND FEED KNOB
3. DRESSER PLUNGER
4. DRESSER
5. FLUSH PIN GAGE
6. CENTRALIZER FINGER
7. GRINDER CENTRALIZER
8. SLING
9. ARBOR
10. STAND
11. CENTRALIZING RINGS
12. ARBOR BUSHING
13. SPACER
14. ADJUSTING NUT
15. COVER
16. WHEEL
17. HORIZONTAL HAND FEED KNOB
18. INDICATOR DIAL GAGE CLAMP
19. GRINDING WHEEL DIMENSIONS
20. AIR HOSE

Figure 6-82. Reconditioning Cylinder Mounting Deck Faces

e. Suspend an air hose (20, figure 6-82) over grinder shaft and connect hose to the grinder air gun using quick connect coupler.

f. Apply a very light coating of Dykem Blue (Dykem Co., 2301 East North 11th Street, St. Louis, Missouri) to the cylinder decks.

g. Check the grinding wheel, A54KB-11 (Norton Co., Worcester, Massachusetts) for balance by triggering the air gun intermittently. When attaining proper balance, allow the grinder to run several minutes.

h. Use the wheel dresser to form a chamfer on the wheel as shown. When dressing bottom face of the wheel, lock the diamond in position by tightening lock screw provided. Vertical and horizontal adjustments are made by turning the feed knobs (2 and 17).

i. Position the grinding wheel over the deck surface to obtain complete coverage and to blend in with raised portions of deck. Check clearance all around by slowly rotating grinder. Reverse or remove any crankcase attaching bolts which offer interference.

j. Grind the surface to clean up and use feed knobs slowly. Do not stop the grinding wheel while in contact with cylinder mounting deck.

k. Cylinder decks must be parallel to the centerline of the main bearing within 0.005 inch full indicator reading. The check is made by zeroing the dial indicator and indicating the entire 360 degrees of surface.

l. The maximum permissible stock removal is 0.015 inch. The surface is checked in relation to the centerline of the case by inserting the rod of gage through the hole in the centralizing disc and measuring from the deck surface to top of the arbor. The gage must not go above flush.

m. The surface finish of the deck must not exceed 50 microinches rms as determined by a standard Profilometer. Flatness must be 0.002 inch full indicator reading using a dial indicator and checking both radially and diametrically over the deck surface.

n. When necessary, indicate the cylinder deck chamfer to equalize readings as closely as possible.

o. Position grinding wheel and regrind the chamfer by rotating the grinder in the same manner used for the cylinder decks.

p. Maintain chamfer at the deck bore to a diameter of 6.631 - 6.641 inches and a 50 degree plus or minus 30 minute angle and concentric with the deck bore within 0.005 inch full indicator reading. For checking purposes, use dial indicator method specified for cylinder decks.

q. Loosen centralizing adjustments and lift grinder out of the crankcase. Rotate crankcase to the next cylinder deck. Proceed as directed in the preceding paragraphs for this and all the remaining cylinder mounting decks.

r. Break all sharp edges to a 0.010 - 0.030 inch radius using standard shop practices. Special care is required in the oil drain dowel areas.

s. Wash crankcase thoroughly.

6-329. CRANKCASE MAIN SECTION, CYLINDER HOLD-DOWN CAP SCREW HOLE THREADS, RECONDITIONING.

6-329A. Prior to repairing a defective cylinder hold-down cap screw hole, inspect the cylinder deck for surface condition and flatness, and for parallelism with the crankcase fore and aft centerline. Refer to paragraph 6-77. Recondition the deck as necessary, then repair the cap screw hole thread by installing a heli-coil insert as follows. Refer to paragraph 6-326.

NOTE

Heli-coil inserts are not to be installed in hole locations immediately adjacent to the parting surfaces of the crankcase halves. Inserts may be installed in all other hole locations as needed.

6-330. Drill, Ream and Chamfer Defective Hole.

a. Clamp the crankcase main section vertically to a radial drill press adjustable angle block or vertical rotary indexing head. Position a cylinder deck with a defective thread at the top. See figure 6-83.

b. Indicate the decks to be square and true with the drill press spindle within 0.002 inch full indicator reading. Lock the crankcase securely in position.

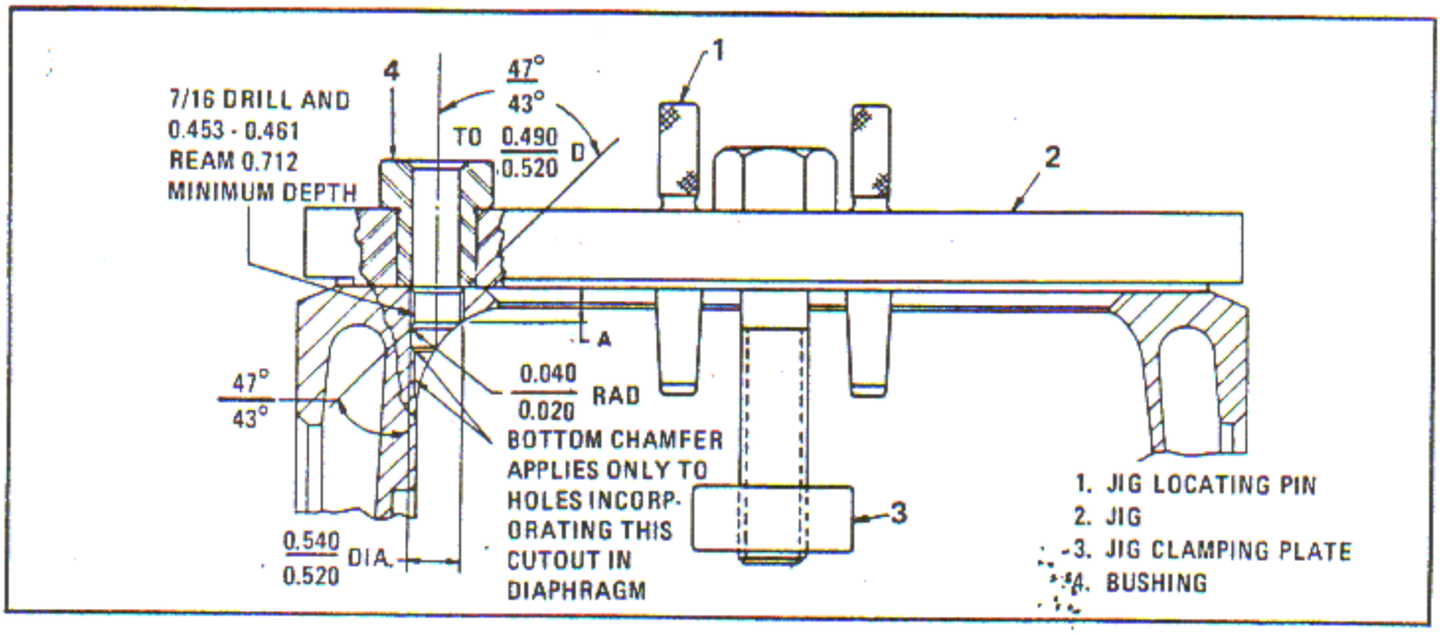

Figure 6-83. Crankcase Main Section Cap Screw Hole Reconditioning Limits

c. Mount jig (2, figure 6-83) on the positioned cylinder deck as shown. Align the jig (1) with its two locating pins placed in deck holes adjacent to the parting surfaces and 180 degrees apart. Clamp the jig securely in position using the jig center bolt and clamping plate (3).

d. Insert a 7/16 inch diameter drill bushing (Cat. No. L-23, 0.438 + 0.0005 - 0.000 inch ID, Ex-Cello Corp., Detroit 32, Michigan, or equivalent) in the jig hole over the cap screw hole to be machined. Assemble and align a 7/16 inch diameter drill (List No. 940, Cleveland Twist Drill Co., Cleveland, Ohio, or equivalent) in the drill bushing. Using a full flow of coolant (paragraph 6-197), drill through to a 0.712 inch minimum depth. Remove the drill and drill bushing.

e. Insert a reamer bushing (Cat. L-23, 0.4534 +0.0002 -0.000 inch ID, Ex-Cello Corp., Detroit 32, Michigan, or equivalent) in the same jig hole. Assemble and align a standard 29/64 inch diameter reamer (List No. 630, Cleveland Twist Drill Co., Cleveland, Ohio, or equivalent) in the bushing and ream through to a 0.712 inch minimum depth using a suitable coolant. Refer to paragraph 6-197. Remove the reamer and bushing and check the hole size to ensure the diameter is 0.453 - 0.461 inch as shown.

f. Assemble holder (Cat. No. 1H-M2, Eclipse Counterbore Co., Detroit 20, Michigan, or equivalent) and an altered 90 degree included angle countersink (Cat. No. 948498, Eclipse Counterbore Co., Detroit 20, Michigan, or equivalent) with an altered pilot (Cat. No. 944923, Eclipse Counterbore Co., Detroit 20, Michigan, or equivalent) in the drill press spindle and centralize with the hole. See figure 6-84 for altered countersink and pilot. Countersink the top of the hole to a diameter of 0.490 - 0.520 inch as shown. Remove the countersink from the holder and remove the jig.

g. Cut the countersink at the bottom of the hole with a grooving tool (Model A-1, Waldes Kohinoor Inc., Long Island City 1, N.Y.) equipped with a cutter ground from a blank to the dimensions shown in figure 6-85. Adjust the tool to cut to a diameter of 0.520 - 0.540 inch and to dimension A of 0.380 - 0.410 inch. Dimension A is the distance from the small diameter of the bottom countersink to the cylinder deck, as shown in figure 6-83. Measure with depth gage. If the countersink does not clean up within the A dimension given, it is permissible to reduce the A dimension to a minimum of 0.295 inch, measured with depth gage. Reject the case if it does not clean up at the 0.295 inch limit.

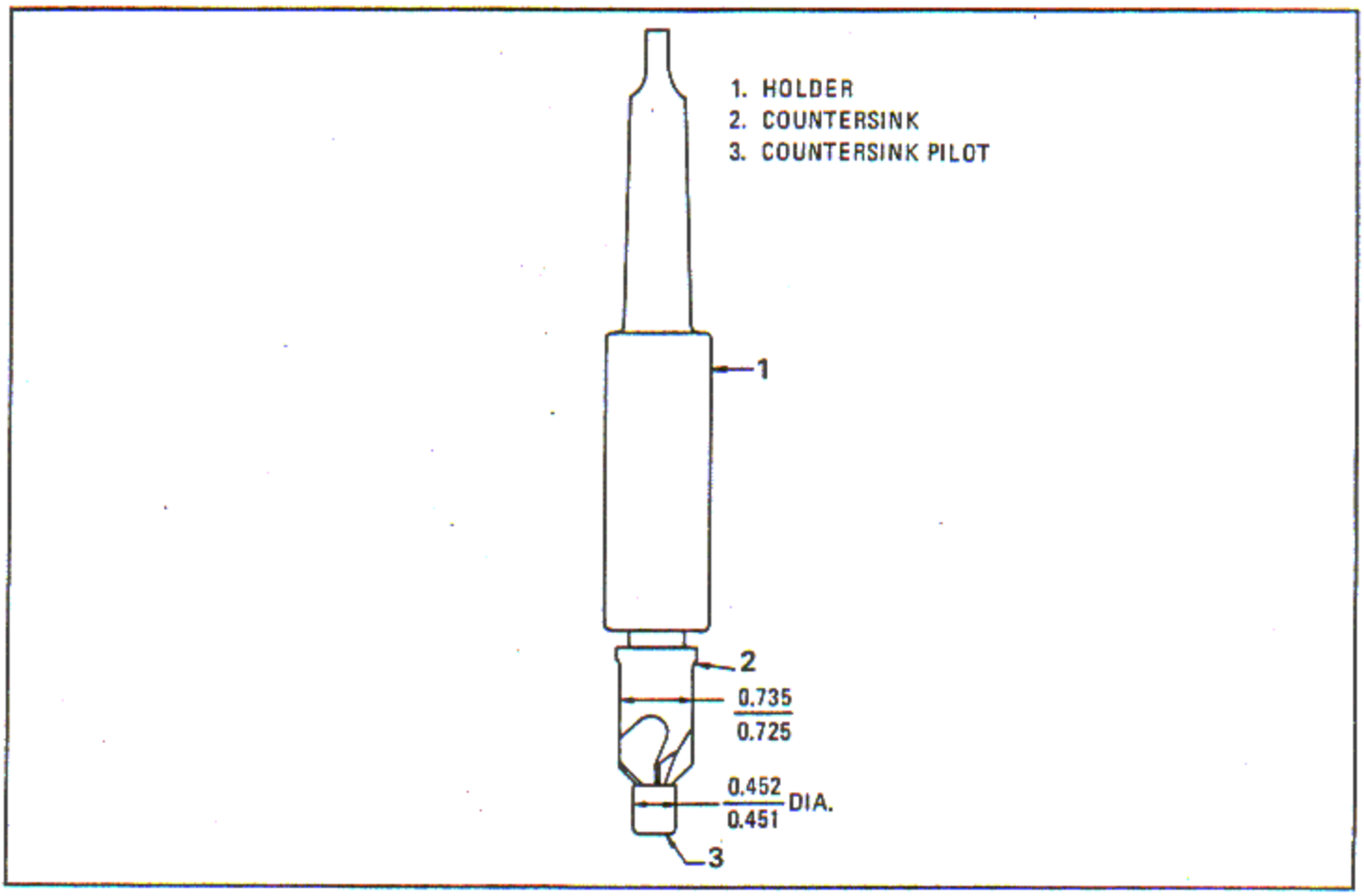

Figure 6-84. Dimensions for Altering 90 Degree Countersink and Pilot

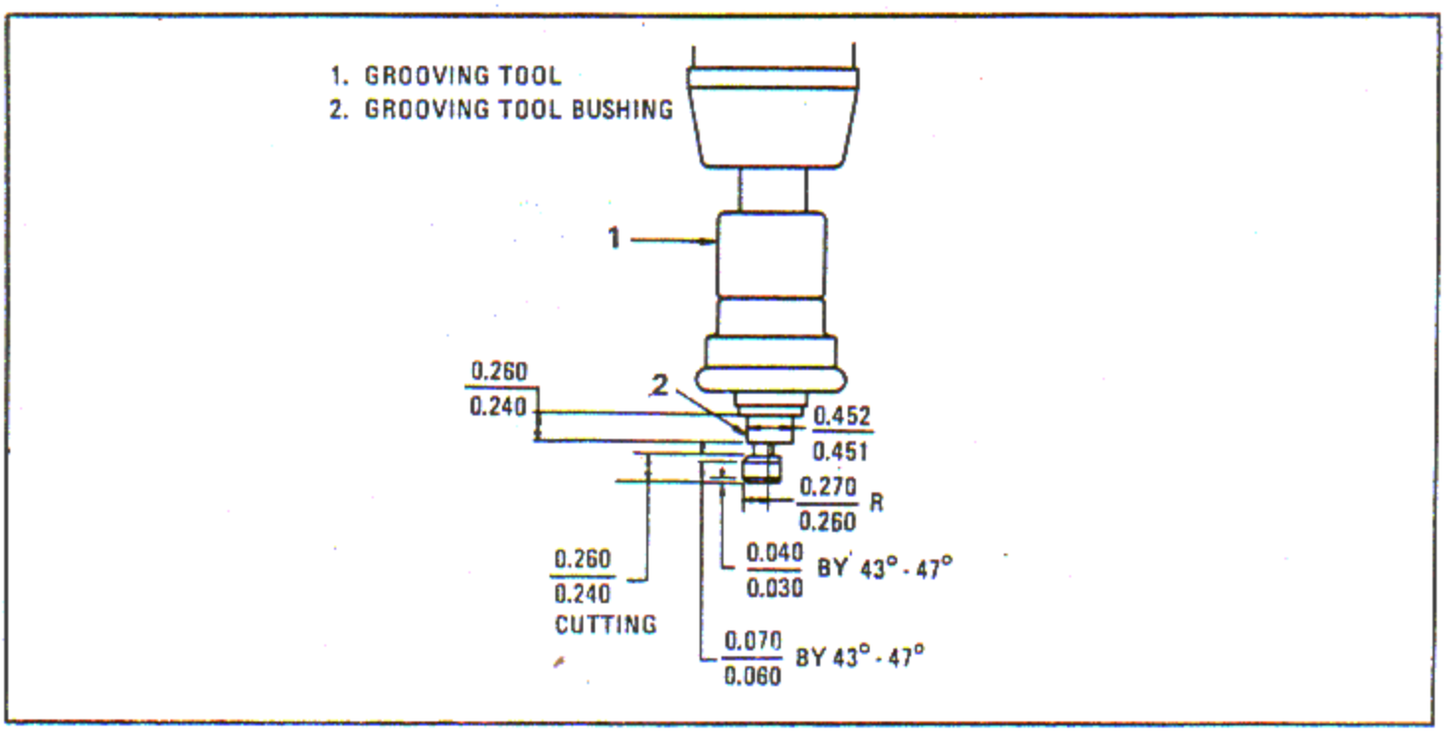

Figure 6-85. Grooving Tool Cutter Dimensions

NOTE

At some hole locations, the grooving tool cutter will cut into the front or rear diaphragm. This is permissable within the 0.520 - 0.540 inch diameter dimension given.

6-331. Tap Hole for Heli-Coil Insert.

a. Install jig on the cylinder deck. Insert tap bushing (Cat. No. L-23, 0.5035 + 0.0005 - 0.000 inch ID, Ex-Cello Corp., Detroit, Michigan, or equivalent) in the jig.

b. Assemble tap (Cat. No. 42193-7H3, 7/16 inch -20 thd, Heli-Coil Corp., Danbury, Connecticut) and tap wrench (Cat. No. 91C, L. S. Starrett Co., Athol, Massachusetts, or equivalent). Tap the hole eight full turns using blend No. 20 lubricant as instructed in paragraph 6-197. This will produce a 0.4700 - 0.4731 PD, Class 3B Heli-Coil thread.

c. Clean and check the tapped hole with the thread gage (Cat. No. 3694-7, Heli-Coil Corp., Danbury, Connecticut).

NOTE

The No-Go end of the gage should not enter more than two turns and the threads shall have a smooth finish. Retap the hole if it is undersize.

d. Remove the drill jig from the cylinder deck and thoroughly clean all cap screw holes.

6-332. Install Heli-Coil Insert. Ensure that the Heli-Coil insert and the tapped hole in the crankcase is clean and dry.

CAUTION

Do not use lubricant of any kind when installing an insert.

NOTE

The Heli-Coil insert specified is a standard size and must be cut off to the length required by the A dimension established in paragraph 6-330. See figure 6-83.

a. Using inserting tool (Cat. No. 535-7, Heli-Coil Corp., Danbury, Connecticut), install insert No. 1191-7 Cn (Heli-Coil Corp., Danbury, Connecticut) approximately one-half to three quarters of a turn below the hole starting thread. Ensure that the insert does not extend below the lower thread area after installation.

b. Remove the Heli-Coil insert driving tang using break-off tool (Cat. No. 1297-7, Heli-Coil Corp., Danbury, Connecticut).

c. Visually inspect the insert to ensure that the tang has been broken off cleanly; inspect the top and bottom ends to ensure that they are firmly seated in the cap screw hole threads.

d. Using thread gage, check the insert threads.

NOTE

The gage should not go more than two turns into the insert.

e. Re-check the threads using a new cylinder hold-down cap screw. The cap screw should turn freely and easily in and out of the hole.

f. Check the squareness of the threads in relation to the cylinder deck using a locally ground and threaded pin in the cap screw hole. Indicate the pin OD in relation to the deck area surrounding the cap screw hole.

NOTE

The threads must be square and true with the cylinder deck within 0.002 inch per inch.

g. Heli-Coil inserts may be removed, if necessary, using extracting tool (Cat. No. 1227-16, Heli-Coil Corp., Danbury, Connecticut).

6-333. CRANKCASE MAIN SECTION REAR MAIN BEARING LINER REPLACEMENT. (See tool group 21.)

a. Remove the splined lock attaching nuts, washers and bolts.

b. Remove the splined lock.

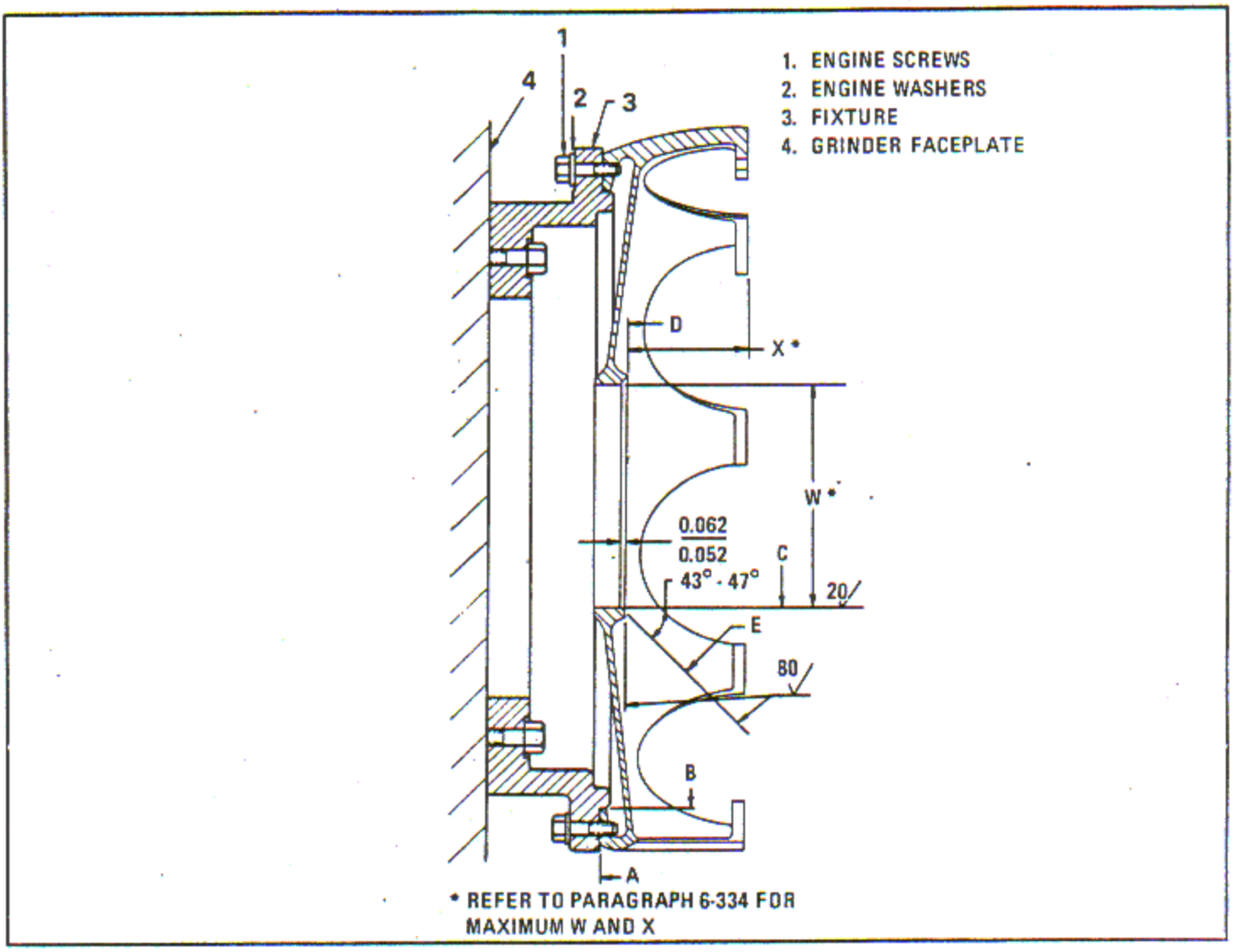

Figure 6-86. Grinding Crankcase Main Rear Section Bearing Surfaces

CAUTION

Do not grind through side wall of liner.

c. Using a suitable grinder, grind a slot in the liner flanges and liner ID to obtain a thin wall of approximately 0.010 inch.

d. Collapse and remove the liner. Be careful not to damage the crankcase.

e. Magnetic particle inspect to ensure no cracks exist.

f. Demagnetize the crankcase and wash thoroughly in cleaning solvent Federal Specification P-D-680.

6-334. Inspect and Grind Crankcase Main Rear Section Bearing Surfaces to Suit Oversize Liner.

a. Inspect the crankcase rear section bore to determine if it is satisfactory for re-use with a standard size liner. If the bore and/or face are unacceptable due to scoring, galling or wear, it will be necessary to recondition them for use with an oversize bearing liner.

b. Inspect all crankcases for the presence of chrome plate in the rear main bearing liner bore of the crankcase rear half. If chrome plate is present, grind it out sufficiently to remove all traces of the chrome plate. Install an oversize liner in accordance with the following steps.

NOTE

Omit the remainder of this operation in the event that an oversize liner is not required.

c. Mount a 24 inch minimum diameter faceplate (4, figure 6-86) on a suitable internal grinder.

d. Install a cup grinding wheel, (Norton 38A60-J8-VBE, Norton Co., Worcester, Mass., or equivalent) on the grinder spindle.

e. Square up the surface of the installed faceplate by taking a skim cut out with the grinding wheel mounted in the grinder spindle.

f. Clamp fixture (3) on the faceplate (4). Indicate surfaces A and B to run true within 0.0005 inch full indicator reading. Clamp fixture securely and reindicate to ensure the indicator readings remain within specified limits.

g. Clamp rear section of the crankcase lightly to fixture (3) using engine screws (1) and washers (2). Indicate ID, surface C to run true, and hub face, surface D, to run true within 0.001 inch full indicator reading. Clamp the crankcase tightly and reindicate to ensure concentricity requirements are retained.

h. Using a grinding wheel speed of approximately 4500 surface feet per minute, a work speed of approximately 60 rpm and a continuous flow of coolant, blend 51, grind the crankcase main rear section bore to clean up only. Do not exceed a maximum diameter (W) as listed below:

Splined Liner	6.927 inches
Plain Liner	6.947 inches

For the plain liner do not exceed a maximum diameter of 6.927 inches if the crankcase housing has holes drilled for anti-rotation pins. Exceeding these dimensions means scrapping the crankcase, because this is a highly stressed area. Record diameter for use when grinding oversize liner to fit.

i. If hub face is scored or galled, grind to clean up only. Do not exceed a hub face to parting line dimension (X) as listed below:

Splined Liner	3.755 inches
Plain Liner	3.736 inches

Record the finished dimension (X) for computing the amount to grind from the OD flange of the liner. Regrind the 45° x 0.052 - 0.062 inch chamfer on hub forward face as shown.

j. Maintain a surface finish of 20 microinches rms or better on bore C, and 80 microinches rms or better on face D and chamfer E.

k. Magnetic particle inspect for grinding checks and cracks.

l. Demagnetize the crankcase and wash thoroughly in cleaning solvent, Federal Specification P-D-680.

6-335. Grind Rear Main Bearing Oversize Liner to Fit Crankcase.

NOTE

Liners are furnished in standard and oversizes on the OD and width of outside flange, having the dimensions as shown in the table following. Prior to installation, oversize liners must be ground to fit the crankcase. Before grinding an oversize liner, it is necessary to calculate the amount of material that must be removed during grinding from the rear face of the OD flange. After liner installation and final grinding, the basic dimension Z is 4.700 inches. These dimensions are used in the calculations. Also, in calculating, allow 0.007 inch for final grinding from the front face of the ID flange.

Splined Liner

Liner	OD (Inches)	Flange Width (Inch)	Dimension Y (Inch)
Std.	6.917 - 6.918	0.168 - 0.170	0.949 - 0.953
Y1	6.937 - 6.938	0.178 - 0.180	0.939 - 0.943

Plain Liner

Std.	6.917 - 6.918	0.120	0.998 - 1.002
Y1	6.937 - 6.938	0.130	0.988 - 0.992
Y2	6.957 - 6.958	0.160	0.958 - 0.962

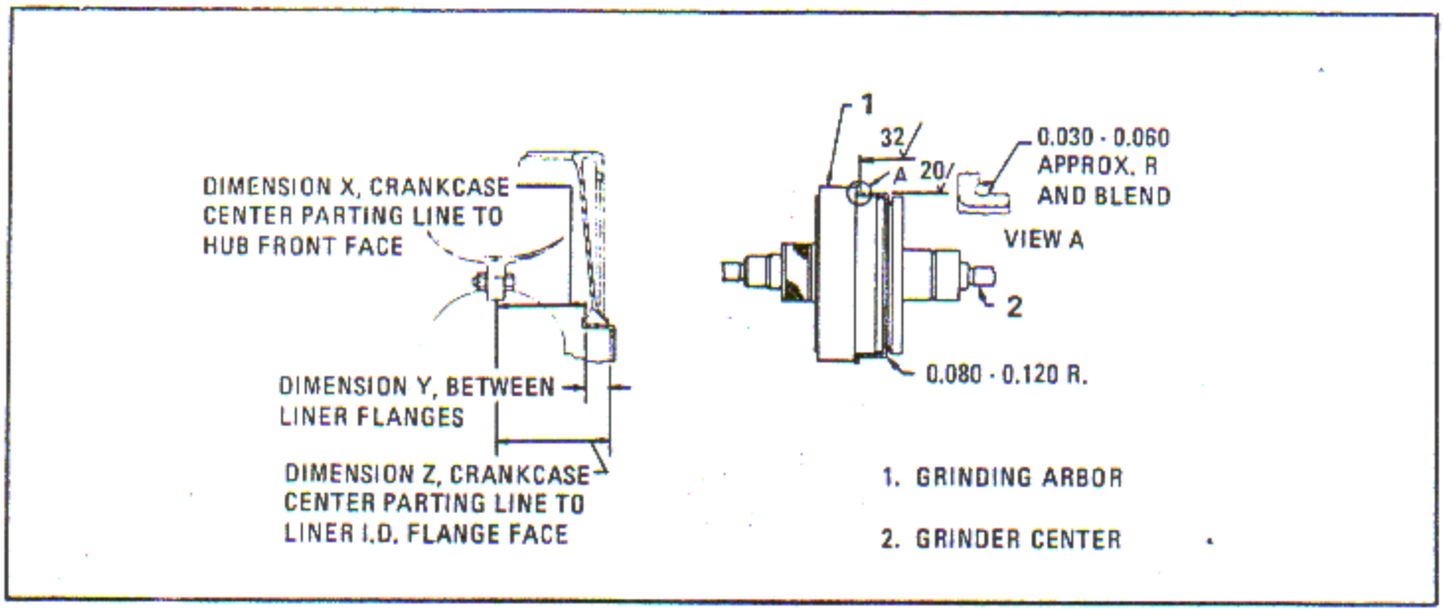

Figure 6-87. Grinding Rear Main Bearing Liner

a. Subtract recorded dimension X from the required finished dimension Z to obtain the necessary finished dimension Y between the liner flanges. See figure 6-87.

b. Measure the distance between the flanges of the liner which is to be ground. Subtract this dimension from that obtained in step a. Allow 0.007 inch for final grinding from the ID flange, and grind the remainder from the rear face of the OD flange.

Example:

4.700	Finished dimension Z.
-3.746	Recorded dimension X.
0.954	Finished dimension Y between flanges.
-0.941	Dimension Y before grinding.
0.013	Total to be removed from both flanges.
-0.007	To be ground from ID flange after installation.
0.006	To be ground from rear face of OD flange before installation.

c. Install a 24 x 4-1/2 x 12 inch grinding wheel (Norton 38A60-J5-VBE, Norton Co., Worcester 6, Mass., or equivalent) on an external grinder (Norton 10 inch plain grinder, Norton Co., Worcester 6, Mass., or equivalent).

d. Assemble oversize liner on arbor (1), and place the arbor between centers (2) of the OD grinder.

e. Using a grinding wheel speed of approximately 6500 surface feet per minute, a work speed of approximately 100 rpm and a continuous flow of coolant, blend No. 51, grind the OD of the liner to obtain a diameter 0.010-0.012 inch larger than the crankcase bore size recorded in paragraph 6-334. Grind the rear face of the OD flange to remove the required amount of stock as calculated in steps a. and b.

f. The required surface finish on the ground OD is 20 microinches rms or better, and for the flange face 32 microinches rms or better.

g. Blend the sharp edge on OD and sharp edge on flange face at undercut in corner to reestablish the 0.030 - 0.060 inch approximate radius. Blend the sharp edge on end of OD to reestablish the 0.080 - 0.120 inch approximate radius.

h. Break sharp edges on spline 0.003 - 0.015 inch approximate radius and blend on splined liner.

i. Magnetic particle inspect for grinding checks and cracks.

j. Demagnetize the liner and wash in petroleum solvent Federal Specification P-S-661.

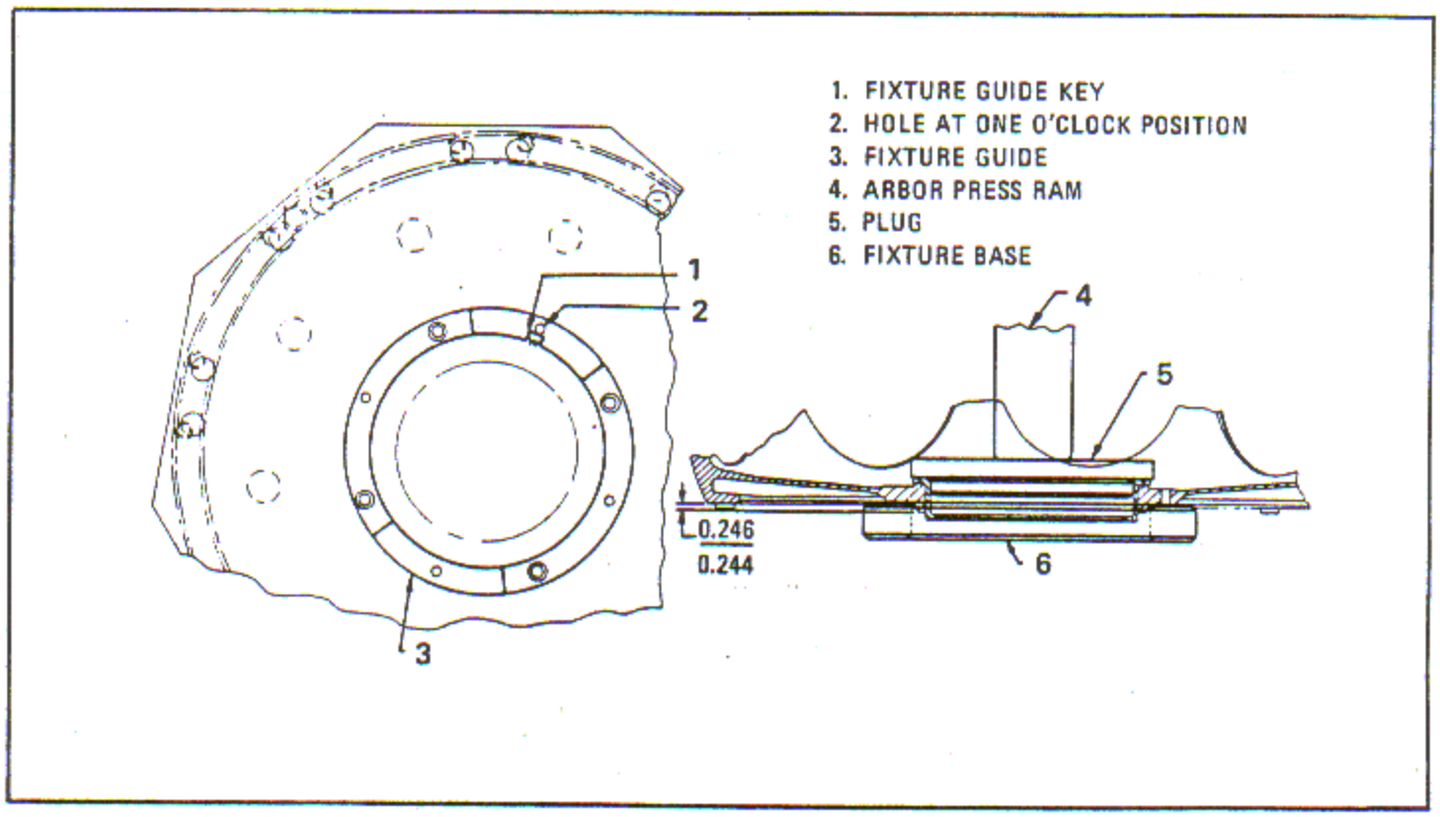

Figure 6-88. Installing Crankcase Rear Main Section Bearing Liner

6-336. Install Crankcase Rear Main Section Bearing Liner.

NOTE

The crankcase rear section incorporates eight holes in the center hub. Identify one hole at one o'clock position, as viewed facing the front or open end of crankcase, from top of crankcase or No. 1 cylinder pad by painting a stripe with Dykem blue radially from this hole.

a. Ensure the parts are clean and deburred.

b. Chill the bearing liner to -57°C (-70°F) using standard shop practices.

c. Install guide of fixture (3, figure 6-88), locating in four holes in center hub, and tooth locator in fixture in line with the hole at one o'clock position in crankcase, previously marked with Dykem blue.

d. Place crankcase and assembly fixture in a suitable oven and heat to 149 - 177°C (300 - 350°F).

e. Remove crankcase with fixture from oven, place on base of fixture (6), and assemble chilled bearing liner to crankcase and to align one spline tooth in liner with tooth indicator in fixture. If necessary, seat the liner against the crankcase hub by tapping the outer flange face, using a nonferrous or fiber drift and mallet. Remove the fixture guide (3).

f. If a 0.0015 inch feeler gage can be inserted between the liner flange and crankcase hub face after the crankcase has cooled to room temperature, place the crankcase on the base of fixture (6) under the ram of an arbor press (4). Locally fabricate a plug (5) and install in the liner ID, and locating against the outer flange face, press in liner to seat on crankcase hub face.

g. Check the distance from the rear main section hub rear end face to the rear parting surface to ensure it does not exceed the 0.246 inch dimension as shown. If the 0.246 inch dimension is exceeded, place the rear section on a suitable rotary grinder and remove stock from the hub face to obtain the 0.244 - 0.246 inch dimension.

CAUTION

Do not strike OD of bearing.

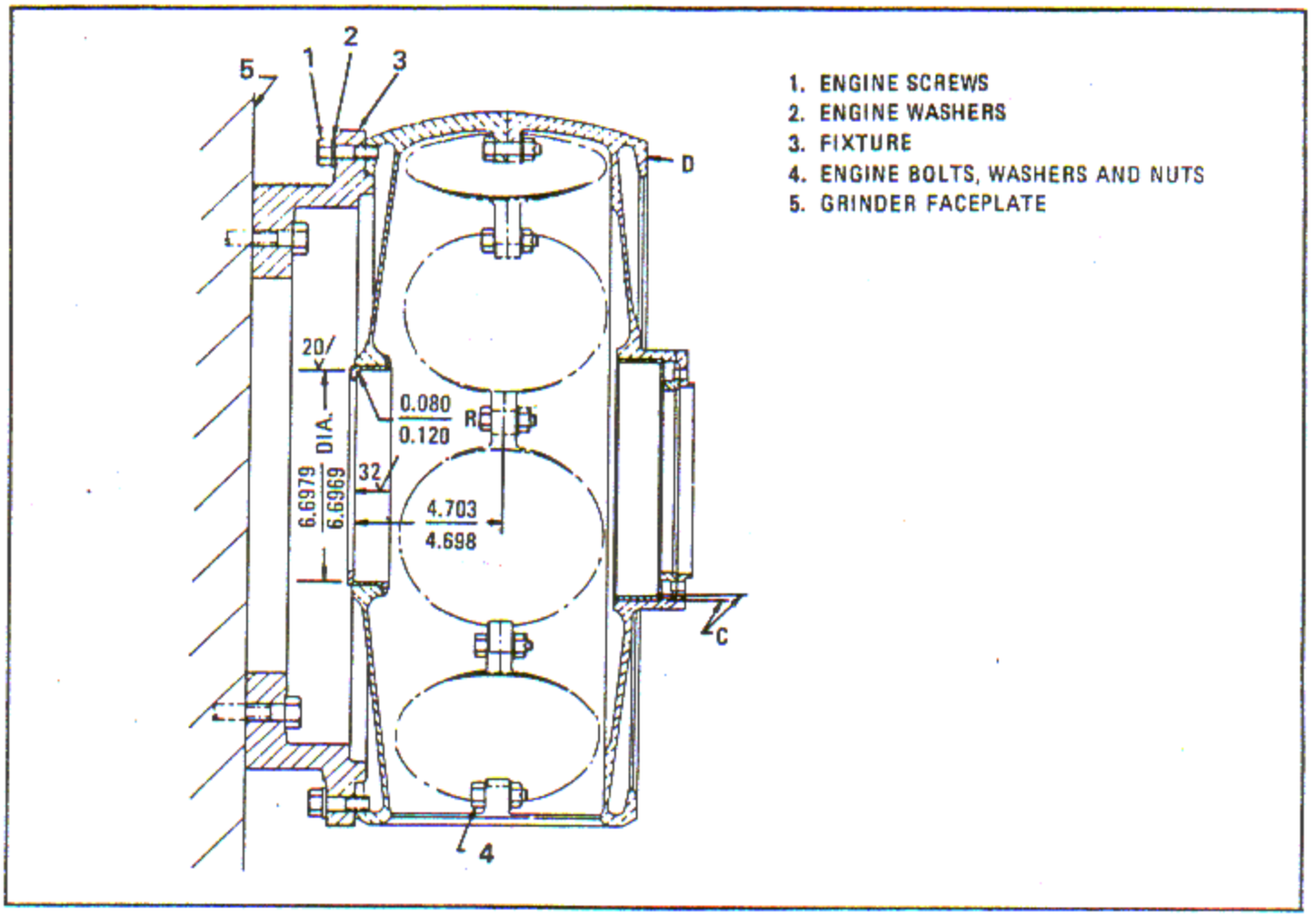

Figure 6-89. Finish Grinding Rear Main Bearing Liner

6-337. Grind Crankcase Main Rear Section Bearing Liner.

a. Stone the legs on the crankcase main front and rear sections to remove all nicks or burrs.

b. Assemble the crankcase main sections using engine bolts, washers and nuts (4, figure 6-89). Ensure the marked legs mate to each other.

c. Install fixture (3) on a suitable ID grinder and mount the assembled crankcase on the fixture as outlined in paragraph 6-334.

d. Indicate ID main front bearing crankcase surface C to run true within 0.001 inch full indicator reading.

e. Remove crankcase front section.

f. Dress a grinding wheel (Norton 38A60-J8-VBE, Norton Co., Worcester 6, Mass., or equivalent) to obtain a 0.080 - 0.120 inch corner radius.

g. Grind the rear bearing liner ID to 6.6969 - 6.6979 inches and the inside flange face to the 4.698 - 4.703 inch dimension shown with a 0.080 - 0.120 inch corner radius. A surface finish of 20 microinches rms or better is required on the liner ID, and 32 microinches rms or better on the flange face. Break sharp edges 0.010 - 0.030 inch approximate radius. Use a headstock speed of approximately 60 rpm and a spindle speed of approximately 4300 surface feet per minute with a continuous flow of coolant blend No. 51.

h. Check the liner ID size with flat plug gage, and the flange face with height gage.

i. Remove the crankcase from fixture.

j. Magnetic particle inspect ground surfaces for cracks and grinding checks.

k. Demagnetize the crankcase and wash thoroughly in petroleum solvent Federal Specification P-S-661.

6-338. Install Crankcase Main Rear Bearing Liner Splined Lock.

a. Assemble lock to crankcase main rear section with the ellipse in line with one hole, previously identified with Dykem blue, at the one o'clock position on crankcase as shown in figure 6-88.

b. Assemble eight bolts, four dual tablock washers and eight nuts.

c. Torque the nuts to 125 - 140 inch-pounds.

d. Bend washer tabs to lock.

6-339. CRANKSHAFT FRONT END EXTENSION JOURNALS GRINDING.

6-340. Grind and Polish Propeller Shaft Pilot Journals.

NOTE

If the front and/or rear journals are unacceptable due to nicks, scratches, scoring or wear, they may be reconditioned by grinding undersize.

a. Assemble and align the crankshaft front and rear ends in accordance with paragraphs 7-18 and 7-19.

NOTE

Do not include components such as master rod or counterweight assemblies.

b. Use a suitable outside diameter grinder and a 36 X 5 X 12 inch grinding wheel (Norton A46-L5 VBA, Norton Co., Worcester 6, Mass. or equivalent). Dress the grinding wheel to incorporate a 0.178 - 0.188 inch radius as shown, figure 6-90.

c. Mount the assembled crankshaft on centers in the grinder. Indicate the crankshaft front pilot journal and front main bearing journal to run true within 0.001 inch full indicator reading.

d. Apply a thin coat of Dykem blue to the crankshaft front and rear pilot journal corner radii. The Dykem blue will provide a visual aid to minimize stock removal when blending into radii after grinding the pilot journals.

e. Grind the journals undersize to clean up only. Blend with 0.178 - 0.188 inch radius in corner as shown. A 0.015 inch maximum stock removal under blueprint low limits is permitted. Do not grind the journals below the diameter provided in the following list.

Maximum Undersize

Front Journal	1.981 inches
Rear Journal	2.6055 inches

f. Use a headstock speed of approximately 48 rpm and a grinding wheel speed of approximately 5000 surface feet per minute with a continuous and ample flow of coolant, blend No. 51.

g. To standardize and facilitate mating crankshaft and propeller shaft assemblies, grind a like amount of stock from both journals. The undersize should be indicated by vibro-peening the amount (i.e., -6 for 0.006 inch undersize) in the area 1.00 - 2.00 inches to the rear of the front journel as shown. Obliterate prior undersize markings if any.

h. Polish journal diameters and radii to obtain a surface finish of 8 microinches rms or better. Use grades 240 and 320 aluminum oxide abrasive cloth.

NOTE

Journal diameters must not be out-of-round or tapered more than 0.0004 inch.

i. Break sharp edges on oil flats 0.030 - 0.060 inch approximate radius to smooth blend flat surface into journal diameter as shown.

j. Magnetic particle inspect crankshaft for grinding checks and cracks.

k. Demagnetize the crankshaft and wash thoroughly in petroleum solvent, Federal Specification P-S-661.

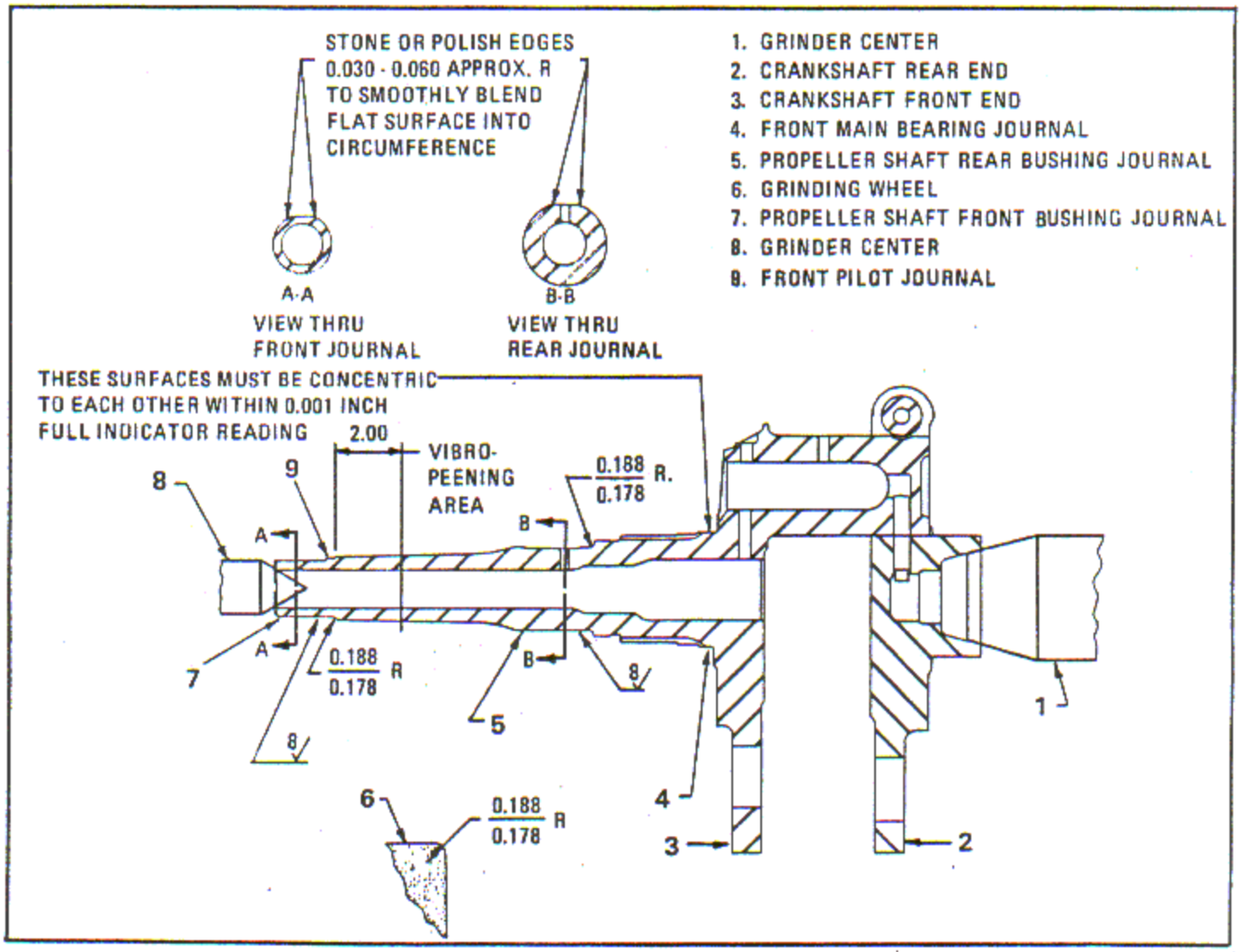

Figure 6-90. Recondition Propeller Shaft Pilot Journals

6-340A. CRANKSHAFT CRANKPIN, RECONDITIONING OF.

a. Crankshaft crankpins shall be reground, lapped or polished during engine overhaul to meet the criterial specified below. The following requirements may be met without having the rear crankshaft clamped onto the crankpin during the rework or when measuring the dimensions specified below.

(1) After rework, the crankpin shall be circular, parallel and straight within .0004 inch. The surface shall be finished to 5 microinch rms or smoother. Surface waviness in excess of .0004 inch or grinding wheel chatter marks are not permitted.

(2) The centerline of the reworked crankpin shall be parallel to the axis of rotation of the part within .0005 inch. The axis of rotation shall be considered to be the centerline of the front main bearing journal.

(3) The crankshaft front extension prop shaft bushing journals shall be concentric within .001 inch FIR to the front main bearing journal.

(4) Crankshafts which have had crankpin journals reground be identified by vibro etching the letter G in the center of the rear face of the crankpin.

(5) After reworking of crankshaft crankpin, restore the .060 - .100 inch radius on the three oil holes.

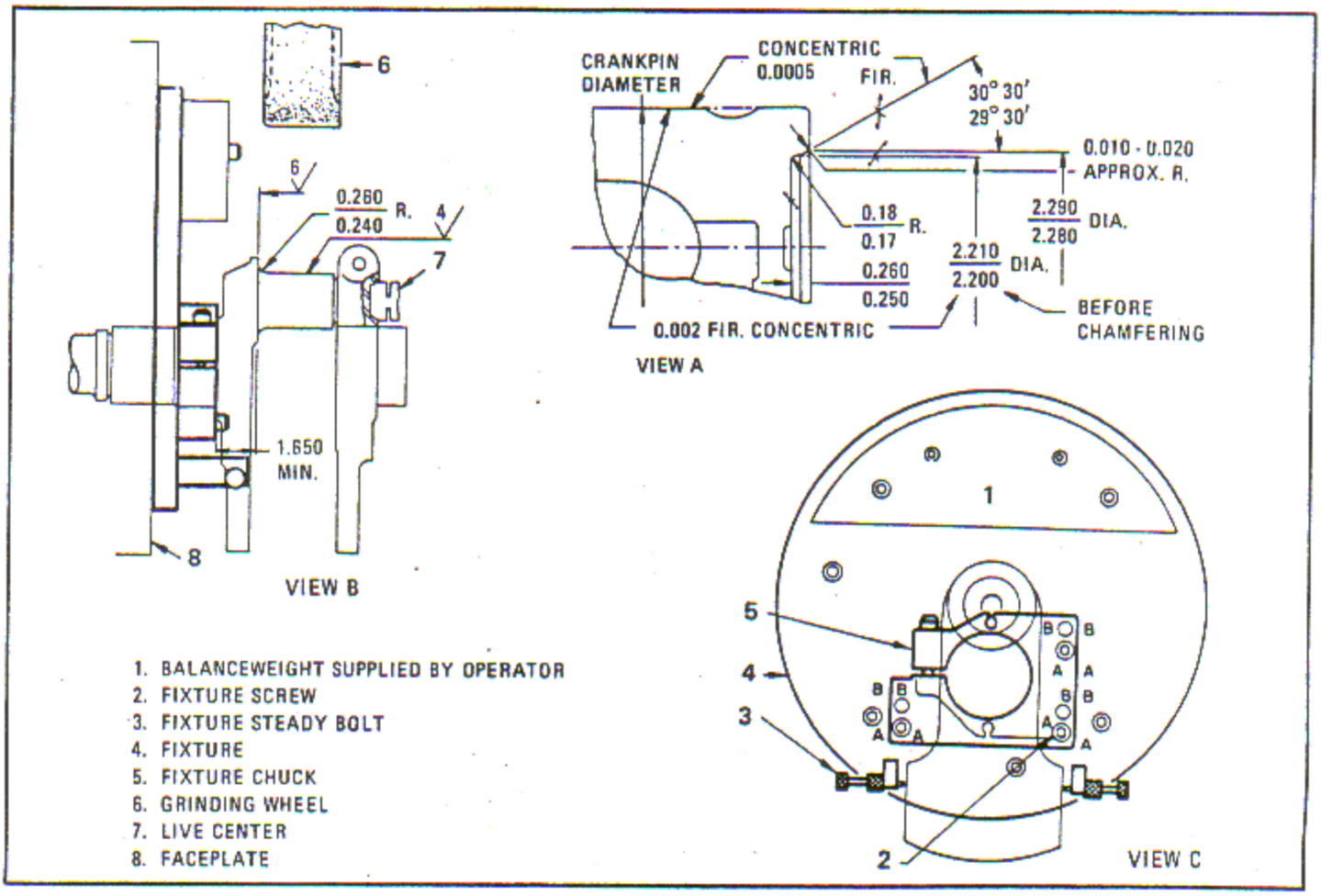

Figure 6-91. Crankshaft Crankpin Grinding

b. Maintain a record of crankshaft crankpin bearing journal diameters after rework by serial numbers of the crankshafts. Record the smallest dimension read if the diameter varies.

6-341. CRANKSHAFT CRANKPIN, GRIND AND LAP FOR UNDERSIZE MASTER ROD BEARING. (See tool group 26.)

6-342. Machine Chamfer Angle. Crankshaft machining and balancing assembly front ends, which do not incorporate a 30 degree chamfer angle on the crankpin end face relief counterbore are to be reworked prior to crankpin reconditioning.

a. Clamp the crankshaft front end on the work table of a suitable jig grinder, locating against the crankshaft front face. Indicate the crankshaft crankpin OD to run as true as possible. Do not exceed 0.0005 inch full indicator reading.

b. Using suitable properly dressed grinding wheels and in accordance with standard shop procedures, regrind the crankpin end face counterbore to new dimensions as shown. See figure 6-91, view A. Incorporate the 30 degree chamfer angle.

6-343. Grind and Lap Crankshaft Crankpin.

NOTE

Crankshaft crankpins are to be reground and lapped when the Table of Limits fit, reference 213, Section IX can no longer be maintained.

a. Assemble and align the crankshaft front and rear ends in accordance with the procedures in paragraph 7-21.

NOTE

Do not include components such as master rod or counterweight assemblies.

b. Use a plain cylindrical crankshaft crankpin grinder (Model C, Norton Co., New Bond St., Worcester 6, Mass., or equivalent). The grinder should have a 26 inch swing, a 72 inch center-to-center distance and a 11.5 inch minimum diameter head stock hole.

c. Indicate the grinder faceplate (8, figure 6-91, view B) to run true within 0.0005 inch full indicator reading. It may be necessary to take a skim cut from the faceplate to ensure it runs true.

d. Clamp fixture (4) tightly to the grinder faceplate (8), indicating the OD to run true within 0.001 inch full indicator reading.

e. Position the fixture clamping screws in holes marked A. See view C.

f. Load and clamp the crankshaft assembly in the fixture chuck (5), locating on the bearing OD and against the shoulder face as shown.

CAUTION

Ensure that a suitable balanceweight (1) is installed on faceplate as shown.

g. Indicate the crankshaft crankpin and thrust face to run true within 0.0005 inch full indicator reading.

h. Rotate the crankshaft in the chuck (5) or move the fixture chuck on the base plate, if necessary, to true up the crankpin diameter and thrust face.

i. Tighten the fixture (4) securely to the machine faceplate (8) and the crankshaft securely in the chuck (5). Adjust the steady bolts (3) snugly against the crankcheek.

j. Install a suitable 60 degree included angle live center in the tail stock of the grinder. Adjust tail stock to enable live center to fit snugly in the end of the crankshaft crankpin.

NOTE

A suitable standard live center must be reworked to suit the crankpin end face counterbore chamfer. Live center must make contact in the chamfer area only.

k. Reindicate to ensure trueness of crankpin positioning.

l. Apply a thin coat of Dykem Blue (Dykem Co., 2301R North 11th St., St. Louis, Mo.) or equivalent, to the crankshaft crankpin diameter fillet radius and thrust face.

m. Use a 42 x 3.5 x 12 inch grinding wheel (Norton 19A46-J5VBE, Norton Co., New Bond St., Worcester 6, Mass., or equivalent) operating at approximately 500 rpm.

n. Dress the grinding wheel to incorporate the same radius as the existing fillet radius on the crankshaft and provide side clearance as required.

o. Use a spindle speed of approximately 35 rpm and a copious flow of coolant as specified in paragraph 6-197.

p. Grind the thrust face and fillet radius to clean up only. Remove a minimum amount of material.

NOTE

The thrust face may be reground as required, until it is flush with the crankcheek surface. If it should become necessary to go below the 1.650 inches dimension, refer to paragraph 6-345.

q. Grind the crankpin diameter using the same speed and coolant to clean up only. Measure the crankpin diameter with a micrometer and finish grind to suit the nearest master rod bearing undersize as given in the following list.

Bearing ID Undersize (Inch)	Grind Crankpin Diameter (Inches)
0.002	3.249 - 3.248
0.004	3.247 - 3.246
0.006	3.245 - 3.244
0.008	3.243 - 3.242
0.010	3.241 - 3.240
0.010	*3.240 - 3.238

*Use only with 0.010 in. undersize master rod bearing.

The dimensions listed allow 0.0005 inch for finish lapping the crankpin diameter.

r. Lap the crankpin using hand lap fitted with a section of 9/0 - 320E aluminum oxide paper (Minnesota Mining and Manufacturing Co., St. Paul, Minn., or equivalent). Place a strip of abrasive cloth, Federal Specification P-C-451, Grade 240 or equivalent in back of the lapping paper to prevent sliding in hand lap. Saturate the lapping paper with light napthenic blending oil.

s. Close the lapping tool around the crankpin. Start the machine and lap to the applicable finish size given in the following list. Saturate the lapping paper periodically to prevent drying and binding.

Bearing ID Undersize (Inch)	Lap Crankpin Diameter (Inches)
0.002	3.2485 - 3.2475
0.004	3.2465 - 3.2455
0.006	3.2445 - 3.2435
0.008	3.2425 - 3.2415
0.010	3.2405 - 3.2395
0.010	*3.2395 - 3.2375

*Use only with 0.010 in. undersize master rod bearing.

t. Crankpins which do not require regrinding shall be lapped as described above, and/or polished to produce a flatness within 0.0005 inch over the entire surface and a surface finish of 4 microinches rms or better.

u. An alternate grinding procedure using a wheel dressed to a radius less than the fillet radius will produce a slight shoulder at the intersection of the blade face and the fillet radius.

v. Blend the shoulder smoothly into the fillet radius.

w. Inspect the shoulder as follows:

(1) Strip the silverplate from the front face of a master rod oil seal disc.

(2) Place the disc over the crankpin and against the thrust face in the assembled position.

(3) If a 0.001 feeler gage cannot be inserted between the disc and the thrust face at the normal contact surface the shoulder is acceptable.

6-344. Crankpin and Thrust Face Inspection.

a. Crankpin surface finish must be 4 microinches rms or better. Reground crankpin diameter must be circular, parallel and straight within 0.0004 inch full indication reading.

b. The thrust face surface finish must be 6 microinches rms or better. Crankpin diameter must be square with thrust face within 0.001 inch full indicator reading.

c. Check crankpin for flatness using gage.

d. Remove crankshaft from fixture. Wash thoroughly to remove dirt, grit and swarf.

e. Vibro-peen the amount of material removed, from the thrust face, on the right of the oil jet hole as viewed from the rear of the crankshaft. See figure 6-92.

f. Magnetic particle inspect for cracks, inclusions or other defects. Refer to paragraph 6-26.

g. Demagnetize after inspection.

6-345. CRANKSHAFT CRANKPIN FRONT THRUST FACE GRINDING. (See tool group 26.)

6-346. Grind Crankshaft Crankpin Front Thrust Face Undercut.

NOTE

Crankshaft crankpin thrust faces may be undercut when normal reconditioning, paragraph 6-341, does not clean up the worn surface.

a. Clamp fixture (6, figure 6-93) to the faceplate (5) of a suitable engine lathe and indicate the fixture OD to run true within 0.0005 inch full indicator reading.

b. Assemble the fixture chuck (7) securely to the fixture base. Locate the clamping screws in holes stamped A, and install a suitable live center (3) in the machine tail stock.

c. Insert spacer (8) in fixture chuck (7) and place adapter (2) over the end of the crankpin clamping journal. Clamp the crankshaft in the

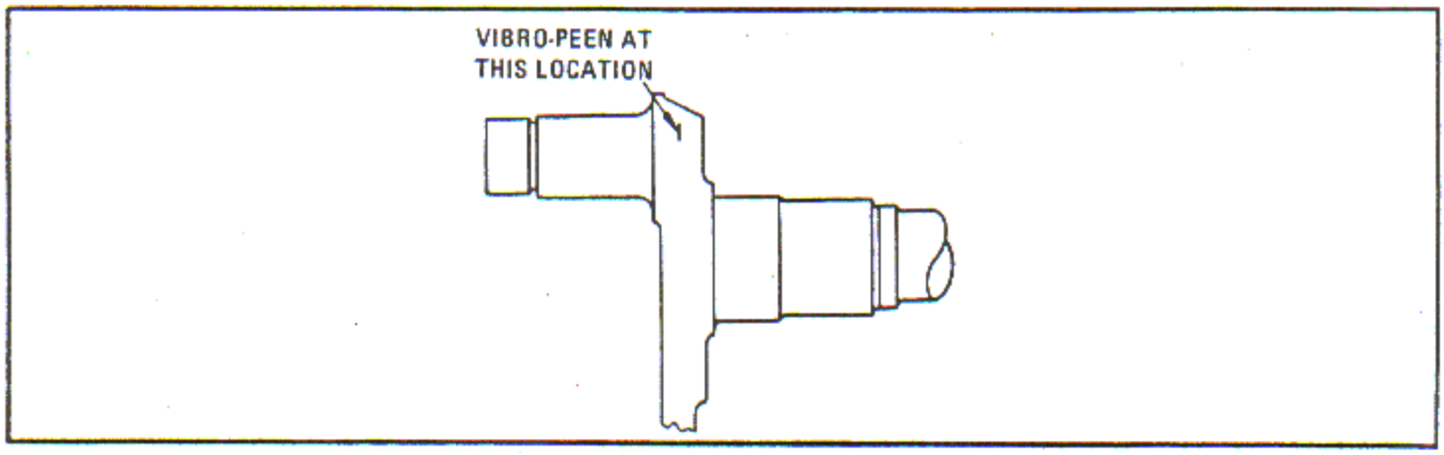

Figure 6-92. Crankshaft Thrust Face Material

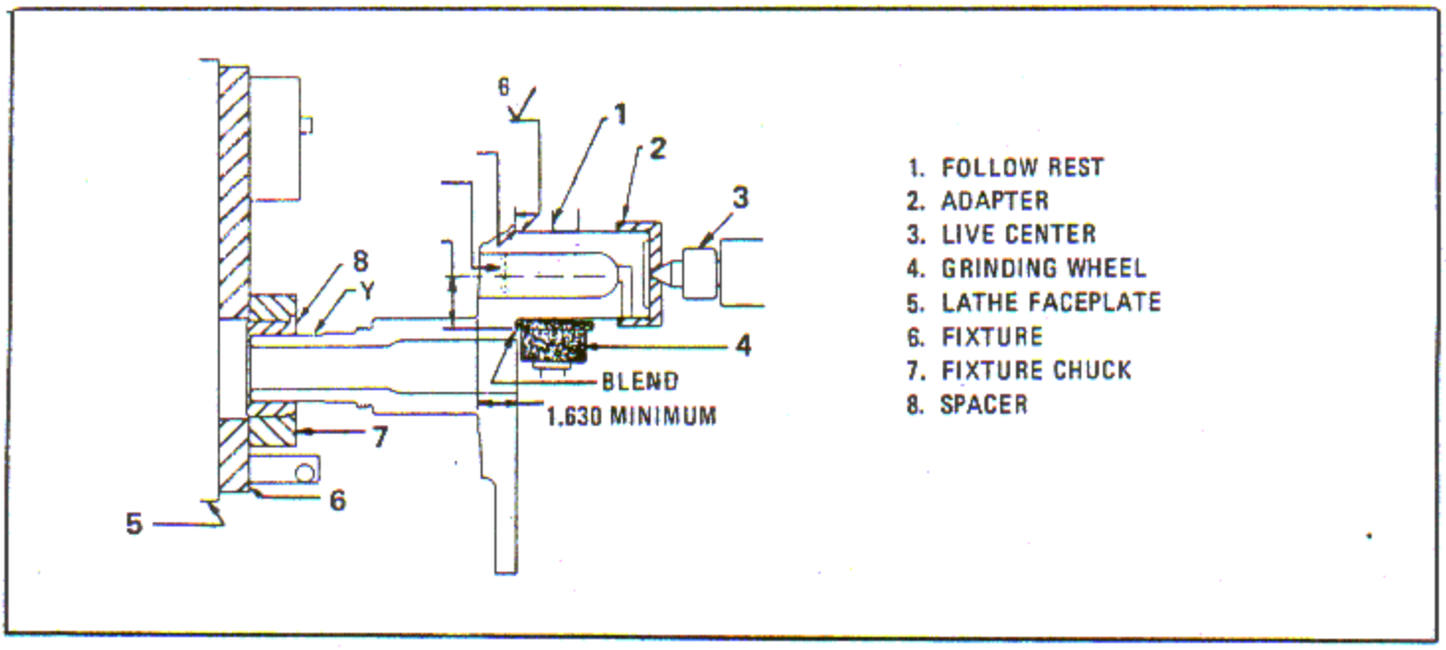

Figure 6-93. Crankshaft Crankpin Front Thrust Face Grinding

fixture chuck spacer (8, figure 6-93) locating on the Y diameter and supporting crankpin and adapter on live center as shown.

d. Engage the live center (3) snugly in the adapter.

NOTE

To further increase rigidity of the set-up, a suitable follow rest may be used if no interference is encountered and mounting can be made.

e. Indicate the crankpin diameter and thrust face to run true within 0.0005 inch full indicator reading. Adjust the fixture chuck (7) on the fixture base plate (6), if necessary, to true up the crankpin diameter and thrust face. Tighten the fixture, the chuck and crankshaft securely. Reindicate to ensure trueness of positioning.

f. Mount a tool post grinder (Model No. 5, The Dunmore Co., 1300 17th St., Racine, Wisconsin, or equivalent) on the lathe compound. Assemble a 3-1/2 x 2 x 3/8 inch cup type grinding wheel, (No. 11, 8A60-K15-VG, Simonds Worden White Co., 1108 Negley Place, Dayton, Ohio, or equivalent) on the grinding quill. Operate the grinding wheel at approximately 6500 rpm.

NOTE

Turn the motor and the grinding spindle on the tool post grinder base 180 degrees to enable proper positioning on the lathe compound.

g. Set the lathe compound dial at a zero reading. Tighten the indicator in position and clamp the tool post grinder at approximately an 8 degree off set angle to provide grinding wheel clearance.

h. Dress the grinding wheel to incorporate the same radius as the existing fillet radius on the crankshaft.

i. Apply a thin coat of Dykem Blue, or equivalent to the crankshaft thrust face and fillet radius.

j. Rotate the crankshaft at approximately 25 rpm and grind the thrust face undercut sufficiently to clean up the worn surface only. Use the compound handle for movement of the grinding wheel to clean up the thrust face and to blend with the existing fillet radius.

NOTE

Thrust faces may be ground to a minimum wall thickness of 1.630 inches and a maximum radial dimension of 2.125 inches (4.250 inches diameter). See figure 6-93.

k. Polish the thrust face using abrasive cloth, Federal Specification P-C-451 and P-C-458, to obtain a surface finish of 6 microinches rms or better. Blend the outer thrust face edge on a gentle taper to the crankshaft blade face to remove sharp edges.

NOTE

If it becomes necessary to grind the thrust face below the minimum wall dimension of 1.630 inches, the crankshaft front end must be rejected.

l. The thrust face must be square and true with the crankpin diameter within 0.001 inch full indicator reading. Inspect dimensions and surface finish using standard inspection equipment.

NOTE

After reworking the crankshaft crankpin, restore the 0.60 - 1.00 inch radius on the three oil holes.

m. Identify the crankshaft by vibro-peening the amount of material removed from the thrust face on the right of the oil jet hole as viewed from the rear of the crankshaft.

n. Perform a magnetic particle inspection in accordance with the procedures outlined in paragraph 6-26 using the wet method. Inspect for cracks, inclusions and other defects. Demagnetize after inspection.

6-347. FRONT AND REAR COUNTERWEIGHT BUSHINGS, FRONT CRANKSHAFT COUNTERWEIGHT BUSHINGS AND REAR CRANKSHAFT COUNTERWEIGHT BEARINGS, REPLACEMENT (R1820-76A, -76B, -80).

6-348. Remove Front and Rear Counterweight Bushings.

NOTE

In lieu of removing bushings by boring, pressing them out is an acceptable procedure, providing that no damage is done to the part. Required surface finish on the part, and specified dimensions must be maintained. The part must be supported in such a manner as to avoid any possibility of physical damage during the pressing operation. Tools must be maintained in good condition.

a. Install support (2, figure 6-94) and spacer (3) in the counterweight slot with the nut clearing the bushing holes as shown. Tighten only enough to prevent the support (2) from slipping out and place on an arbor press table.

b. Press out the bushings with plug (1) and pilot bushing (6).

NOTE

Remove support and spacer if bushing holes require grinding.

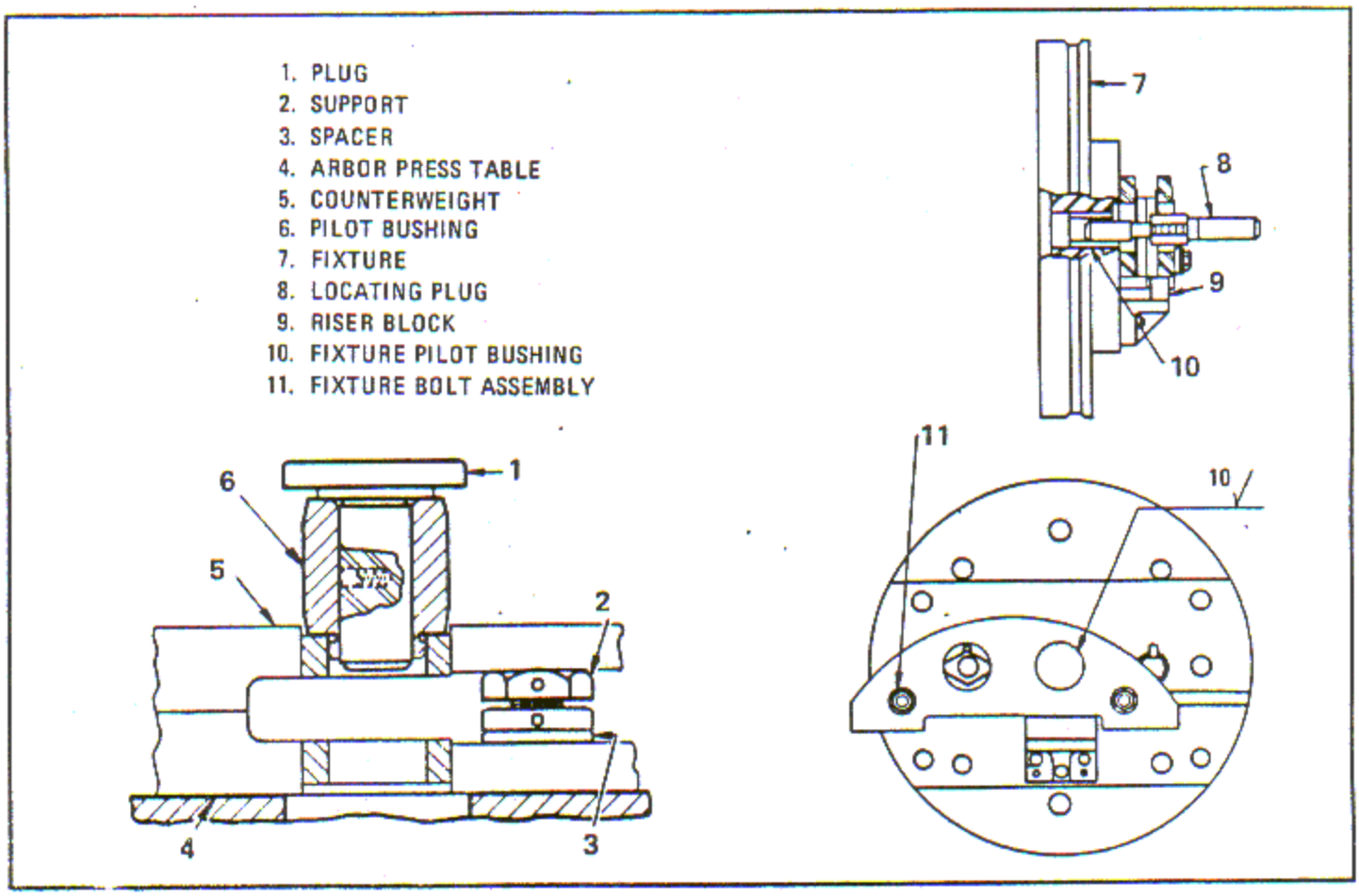

Figure 6-94. Remove and Grind Front and Rear Counterweight Bushings

6-349. Grind Front and Rear Counterweight Bushing Holes.

NOTE

Omit this instruction if the counterweight bushing bores are not scored or fretted and the fit indicated in References 224 and 229, Table of Limits, Section IX can be obtained. If any single counterweight bushing requires an oversize replacement, the other three must be replaced with the same oversize.

a. Mount fixture (7, figure 6-94) lightly on a suitable lathe or grinder faceplate. Indicate the base groove of fixture to run true within 0.0005 inch full indicator reading. Clamp the fixture securely and attach proper riser block (9).

b. Disassemble both attaching bolts, nut and lock cups from the counterweight assembly and replace with two sets of fixture bolt assemblies (11) with the head of the bolt plugs to be on the exposed side of the counterweight for clamping purposes.

NOTE

Ensure the counterweight halves are mated and the parting surfaces are flat.

c. Remove any nicks and burrs from the flat side of the counterweight assembly. Mount the assembly with the flat side toward the fixture.

d. Insert the proper locating plug (8) into the fixture pilot bushing (10) until the locating diameter selected locates the outer half of the counterweight assembly.

e. Ensure the counterweight stop edge is firmly against the riser block (9) and then tighten the counterweight assembly securely. Remove the locating plug (8). Counterbalance the fixture as required.

f. Using a suitable grinding wheel and coolant, a work speed of approximately 100 RPM and a wheel speed of approximately 4500 surface feet per minute, grind the counterweight to the low side of the desired oversize dimension with a surface finish of 10 microinch rms or better. See Table 6-12.

g. Polish to the required finish, if necessary. Check hole size and finish with standard inspection equipment.

h. Unclamp the counterweight assembly and locate in a new position for grinding the other counterweight bushing hole to the proper oversize in the same manner as described in the preceding steps.

i. Holes must be parallel and square with the inside faces of the counterweights within 0.002 inch in six inches.

j. Magnetic particle inspect counterweights for grinding, burns, checks and/or cracks.

6-350. Install Bushings in One Side of Front and Rear Counterweight.

a. Chill bushings to approximately -57°C (-70°F) before installing.

b. Install support (3, figure 6-95) and spacer (4) in the counterweight slot with the nut clearing the bushing holes as shown.

c. Press bushing (6) in, as shown, using plug (7) and pilot bushing until a feeler gage (1), the thickness of which is determined below, slides snugly into space C. The feeler gage thickness is obtained as follows.

Example: Subtract B (bushing height) from A (counterweight wall thickness). Subtract this figure (A-B) from 0.166 inch; the result is dimension C, the thickness of the feeler gage.

NOTE

Do not remove support and spacer until the opposite bushing has been installed.

6-351. Install Bushings on Opposite Side of Front and Rear Counterweight.

a. Chill bushing to approximately -57°C (-70°F).

b. Install support (3, figure 6-95) and spacer (4) in the counterweight slot.

c. Press bushing (6) in as shown using plug (7) and pilot bushing until a feeler gage (1), the thickness of which is determined below, slides snugly into space F. The feeler thickness is obtained as follows.

Example: Subtract E (bushing height) from D (counterweight wall thickness). Subtract this figure (D-E) from 0.166 inch; the result is dimension F, the thickness of the feeler gage.

TABLE 6-12. COUNTERWEIGHT BUSHING GRINDING LIMITS.

Bushing Oversize (Inch)	Bore Diameter Front Assembly (Inches)		Rear Assembly (Inches)
	R1820-76A, -76B, -80	R1820-76C, -76D, -80A, -80B, -86A, -86B	All Models
+0.002 OD	2.0132 - 2.0142	2.0282 - 2.0292	1.9702 - 1.9712
+0.004 OD	2.0152 - 2.0162	2.0302 - 2.0312	1.9722 - 1.9732
+0.006 OD	2.0172 - 2.0182	2.0322 - 2.0332	1.9742 - 1.9752
+0.008 OD	2.0192 - 2.0202	2.0342 - 2.0352	1.9762 - 1.9772
+0.010 OD	2.0212 - 2.0222	2.0362 - 2.0372	1.9782 - 1.9792
+0.012 OD	2.0232 - 2.0242	2.0382 - 2.0392	1.9802 - 1.9812
+0.014 OD	2.0252 - 2.0262	2.0402 - 2.0412	1.9822 - 1.9832
+0.016 OD	2.0272 - 2.0282	2.0422 - 2.0432	1.9842 - 1.9852

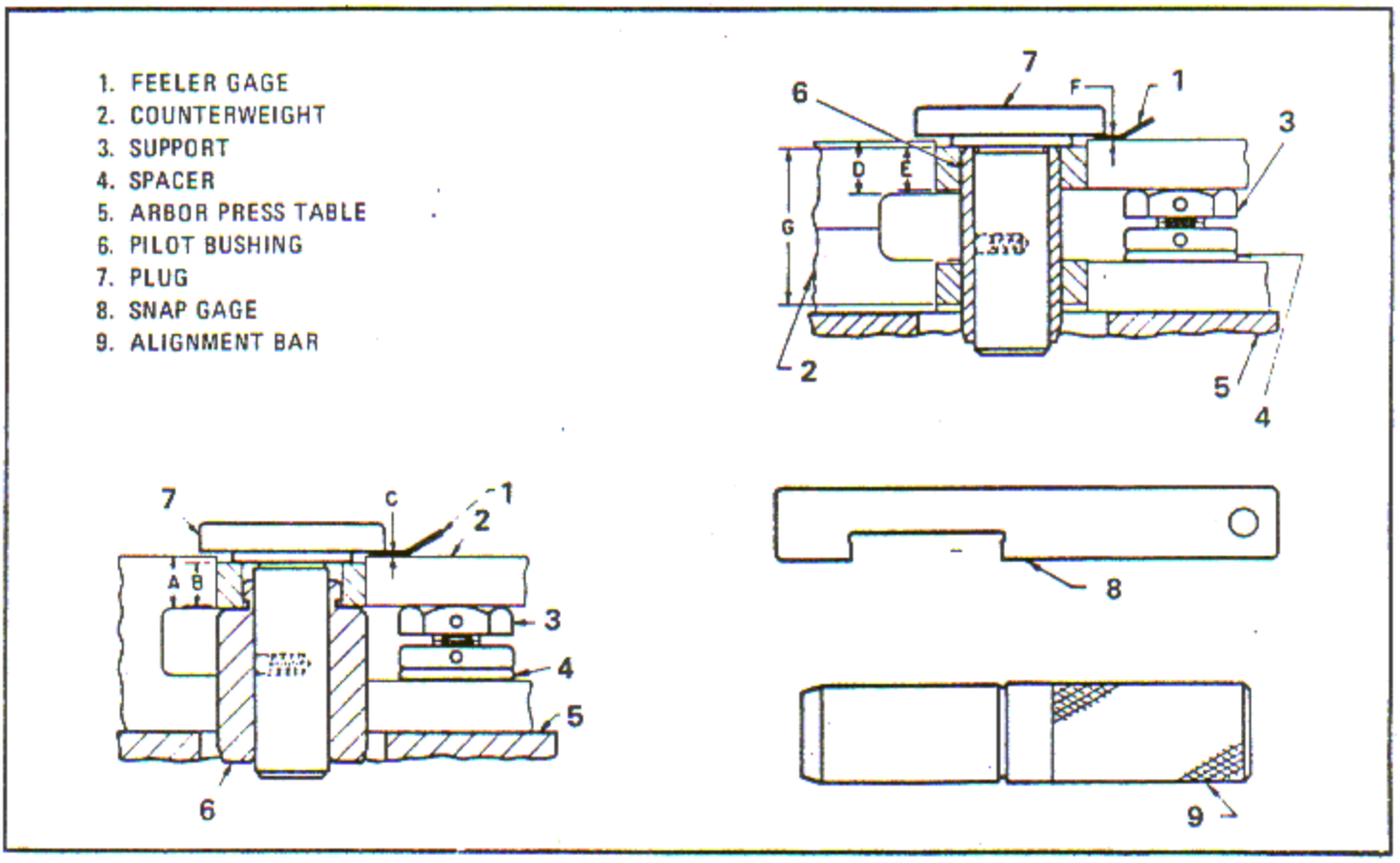

Figure 6-95. Install Bushings on Front and Rear Counterweights

d. Check dimension G (maximum spacing of bushing) with snap gage (8) and check bushing alignment with alignment bar (9).

6-352. Remove Front Crankshaft Counterweight Bushings. Press out the bushings as shown, using plug (4, figure 6-96) and pilot bushing (1).

6-353. Remove Rear Crankshaft Counterweight Bearings. Press out the bushings as shown using plug (4, figure 6-96) and pilot bushing (1).

6-354. Grind Front Crankshaft Counterweight Bushing Holes.

NOTE

Omit this instruction if bushing bores are not scored or fretted and the fit indicated in reference 223, Table of Limits, Section IX, can be obtained. Crankshaft bushings must be replaced in sets of two.

a. Mount a suitable fixture (2, figure 6-97) on the table of a suitable vertical grinder. Indicate the 2-1/8 inch diameter ground bore in the center of the fixture to run true within 0.0005 inch full indicator reading. Clamp the fixture securely.

b. Install the front crankshaft in the fixture (2) and align the bushing hole with the fixture pilot bushing using locating plug (1).

NOTE

Point the arrow on the locating plug toward the hole to be machined to properly position the crankshaft.

c. Clamp securely in position. Grind the bushing hole to the dimensions shown in the following list using a suitable grinding wheel and coolant to obtain a surface finish of 32 microinches rms or better.

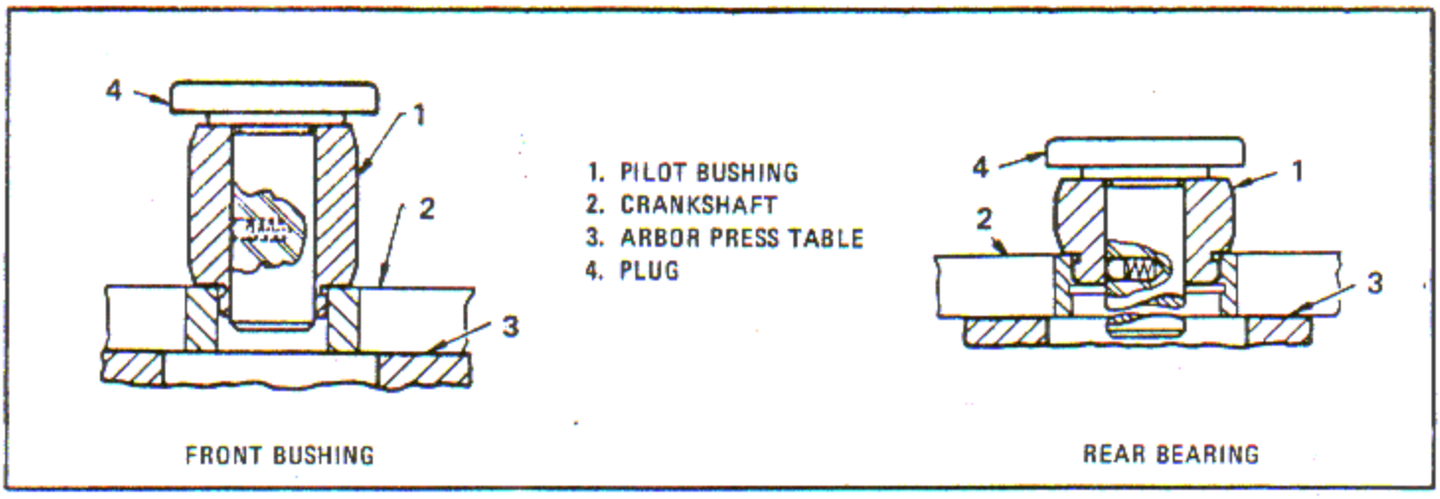

Figure 6-96. Removing Front Counterweight Bushing and Rear Counterweight Bearing

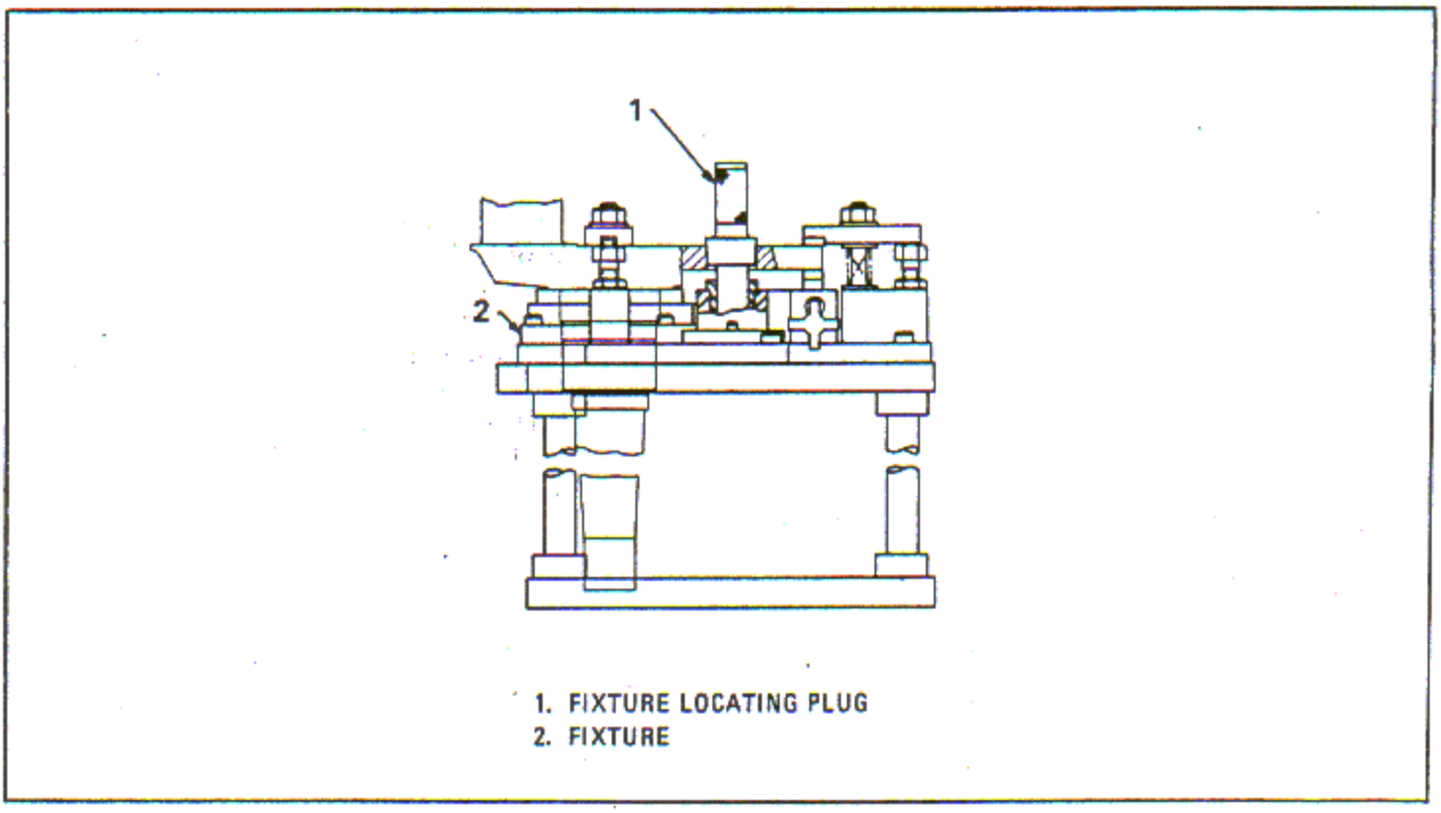

Figure 6-97. Aligning Crankshaft in Fixture Prior to Grinding Counterweight Bushing Holes

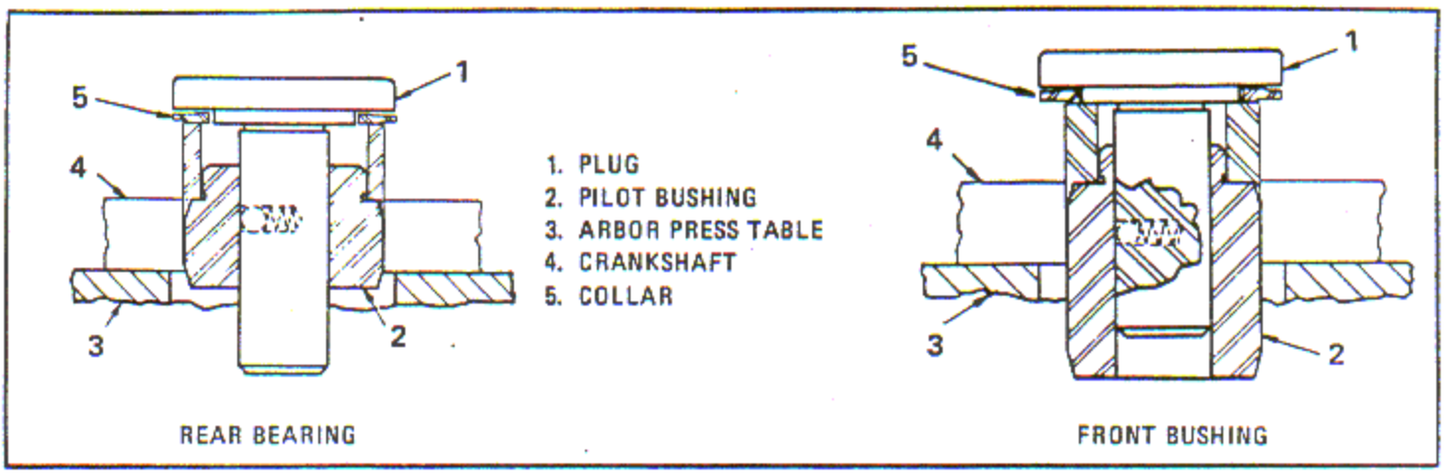

Figure 6-98. Installing Front Crankshaft Counterweight Bushings and Rear Crankshaft Counterweight Bearings

Oversize (Inch)	Diameter (Inches)
0.002	2.0132 - 2.0142
0.004	2.0152 - 2.0162
0.006	2.0172 - 2.0182
0.008	2.0192 - 2.0202
0.010	2.0212 - 2.0222

d. Check hole size and surface finish with standard inspection equipment.

e. To grind the second bushing hole, loosen clamps, pivot the crankshaft and align, installing the locating plug into the newly ground bushing hole, as previously outlined.

f. Clamp the crankshaft securely and grind the bushing hole to its proper oversize. Check hole size and surface finish as in the foregoing.

g. Holes must be parallel and square with both crankshaft faces within 0.002 inch in six inches.

h. Magnetic particle inspect the crankshaft for grinding checks and for cracks.

6-355. Polish Rear Crankshaft Counterweight Bearing Holes.

NOTE

Omit this instruction if bearing bores are not scored or fretted and the fit indicated in reference 227, Table of Limits, Section IX, can be obtained. Crankshaft bearings must be replaced in sets of two.

a. Either polish or hone holes to remove scores or fretting using standard shop methods. Maintain standard size or 0.002 inch oversize as indicated in the following list.

b. When honing, use a suitable coolant.

c. Produce a surface finish of 32 microinches rms or better.

d. Check the hole size and surface finish with standard inspection equipment.

e. Holes must be parallel and square with both crankshaft faces within 0.002 inch in six inches.

f. Magnetic particle inspect the crankshaft for checks and cracks.

Size (Inch)	Diameter (Inches)
Standard	2.250 - 2.251
0.002 OS	2.252 - 2.253

6-356. Install Front Crankshaft Counterweight Bushings.

a. Chill bushings to approximately -57°C (-70° F) before installing. See figure 6-98.

b. Press the bushings in, as shown, using installing collar (5, figure 6-98), plug (1), and pilot bushing (2). Use the proper side of collar to press the bushings in 0.003 inch below flush and press until the collar is tight against the crankshaft. Check the contact with 0.0015 inch feeler gage.

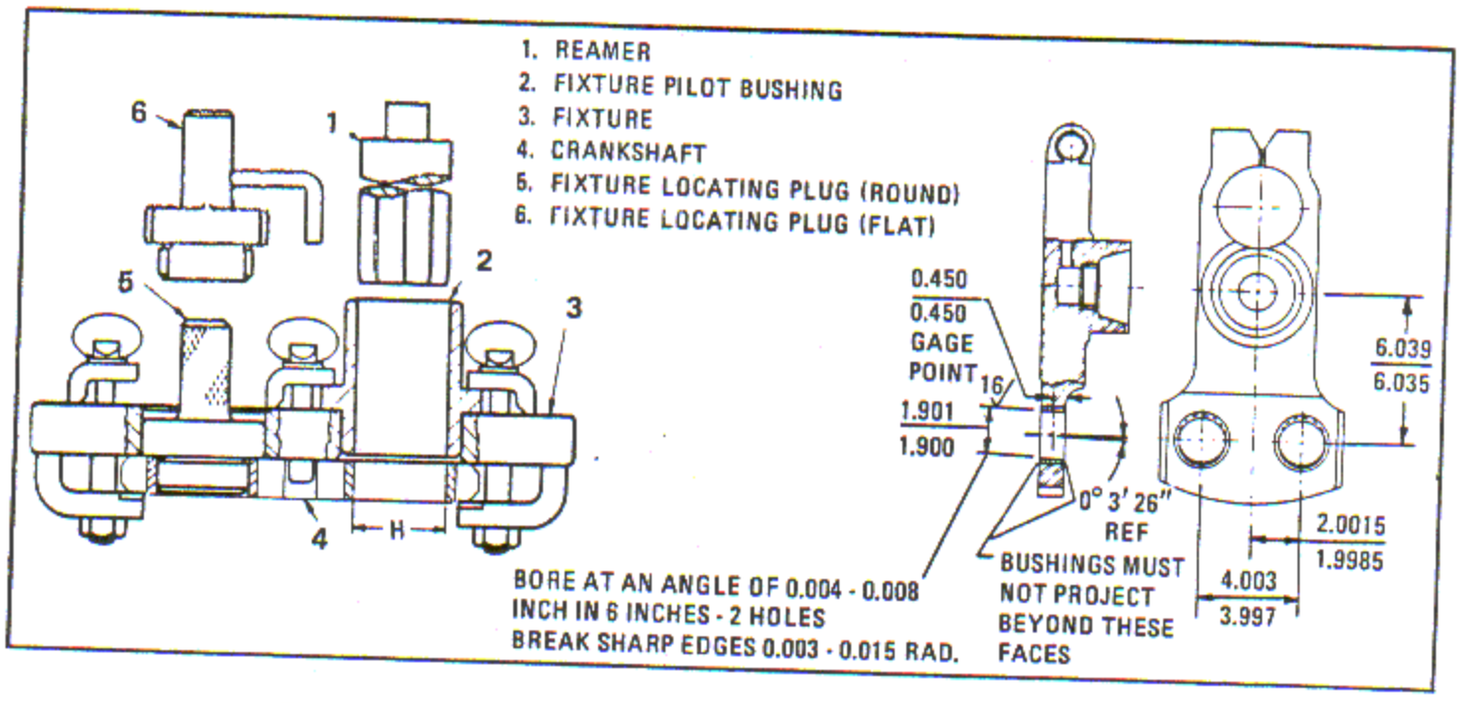

Figure 6-99. Finish Ream Rear Crankshaft Counterweight Bearings

6-357. Install Rear Crankshaft Counterweight Bearings.

a. Chill bearing to approximately -57°C (-70°F) using standard shop practices before installing.

b. Press in bearing using collar (5, figure 6-98), plug (1), and pilot bushing (2). Use proper side of collar to press the bearing 0.003 inch below flush and press until the collar is tight against the crankshaft. Check contact with a 0.0015 inch feeler gage.

NOTE

If the same bearings have been reinstalled, ensure that the lines on the bearings align when checked with a straightedge, and the R and L marked bearings are in their proper bores. All new rear crankshaft counterweight bushings are to be marked as outlined in the following steps.

c. Place the crankshaft rear blade on a work bench with the rear main bearing journal facing upward.

d. Place a straightedge across both bearings through their approximate centerlines.

e. Vibro-peen or scribe a short line at each of the four locations where the straightedge crosses the anti-prop end face of the bearings.

NOTE

Do not mark the crankshaft rear blade.

6-358. Finish Ream Rear Crankshaft Counterweight Bearings.

NOTE

If the tooling and procedure contained in this instruction are not used, the 0 degree 3 minutes, 26 seconds angle must be incorporated by other means.

a. Clamp the crankshaft rear end (4, figure 6-99) to fixture (3), finger tight, as shown. Remove the fixture pilot bushing (2) from the fixture.

b. Align the fixture holes with the crankshaft counterweight bearings using the round fixture locating plug (5) as shown and the flat fixture locating plug (6) in the other bearing so that the flats on the plug are parallel with the end of the fixture. Clamp the crankshaft tightly to the fixture.

CAUTION

Do not loosen the clamps holding the crankshaft to the fixture until both of the bearings have been reamed.

c. Remove the flat fixture locating plug (6, figure 6-99). Insert the fixture pilot bushing (2) and clamp tightly to the fixture (3) with the thumb screws and clamps as shown.

d. Place the fixture containing the rear crankshaft on a drill press table, using parallels as necessary. Clamp lightly.

e. Place shell reamer (1), arbor and floating holder in a spindle with the reamer in the fixture pilot bushing (2) and align with the drill press spindle. Clamp the fixture tightly to the drill press table.

f. Ream the first bearing to diameter A, which is 1.900 - 1.901 inches, and having a 16 microinch rms finish or better using a copious flow of coolant blend number 61. Refer to paragraph 6-197.

g. Remove the fixture pilot bushing (2) and check the reamed hole with a suitable limit plug gage. Remove the round fixture locating plug and replace with the fixture pilot bushing. Clamp tightly with thumb screws and clamps.

h. Remove the clamps holding the fixture on the drill press table. Ream the second bearing, repeating clamping, aligning, machining, coolant and gaging procedures outlined above for the first bearing.

6-359. FRONT AND REAR COUNTERWEIGHT BUSHINGS, FRONT CRANKSHAFT COUNTERWEIGHT BUSHINGS AND REAR CRANKSHAFT COUNTERWEIGHT BEARINGS, REPLACEMENT (R1820-76C, -76D, -80A, -80B, -86A AND -86B). (See tool group 48.)

6-360. Remove Front and Rear Counterweight Bushings.

a. Install support (2, figure 6-100) and spacer (3) in counterweight slot with the nut clearing the bushing holes as shown.

b. Tighten only enough to prevent the support from slipping out.

c. Press out the bushings as shown using plug (1) and pilot bushing (6).

NOTE

Remove the support (2) and spacer (3) if bushing holes require grinding.

6-361. Grind Front and Rear Counterweight Bushing Holes.

NOTE

Omit this instruction if counterweight bushing bores are not scored or fretted and proper Table of Limits fit can be obtained. If any counterweight bushing requires an oversize replacement, the other three must be replaced with the same oversize as the replacement.

a. Mount the fixture (7, figure 6-100) lightly on a suitable lathe or grinder faceplate. Indicate the base groove of fixture to run true within 0.0005 inch full indicator reading. Clamp the fixture securely and attach proper riser (9) as shown.

b. Disassemble both attaching bolts, nuts and lock cups from the counterweight assembly and replace with two sets of both assemblies (11), with the head of the bolt plugs to be on the exposed side of the counterweight for clamping purposes. Ensure the counter halves are mated and that the parting surfaces are flat. Remove any nicks and burrs from the flat side of the counterweight assembly. Mount the assembly with the flat side towards the fixture.

c. Insert the proper locating plug (8) into the fixture pilot bushing (6) until the locating diameter selected locates the outer half of the counterweight assembly. Ensure the counterweight stop edge is firmly against the riser block (9) and then securely tighten the counterweight assembly. Remove the locating plug. Counterbalance the fixture as required.

d. Using a suitable grinding wheel and coolant blend No. 51, a work speed of approximately 100 RPM and a wheel speed of approximately 4,500

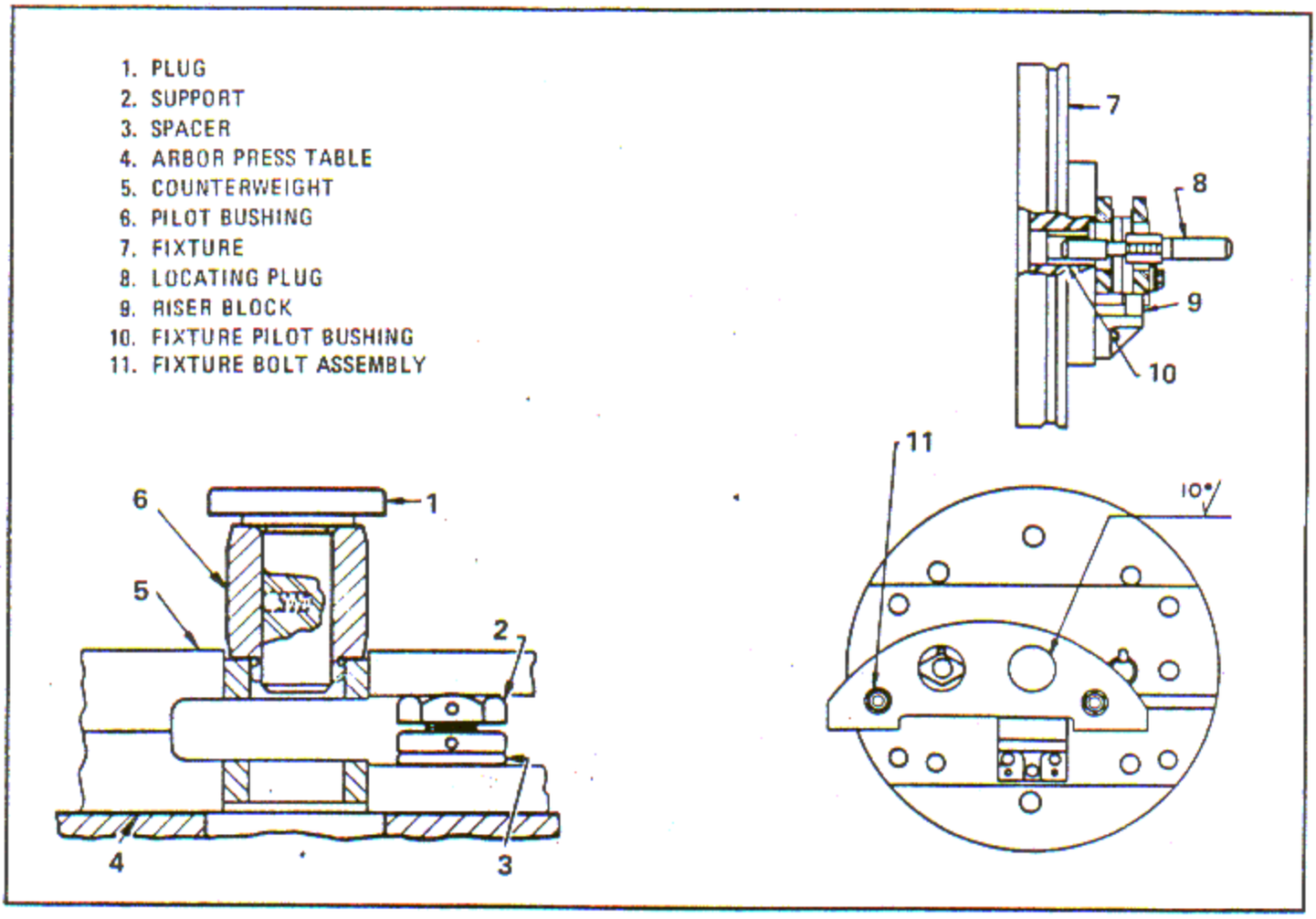

Figure 6-100. Removing Front and Rear Counterweight Bushings and Grinding Holes

surface feet per minute, grind the counterweight to the low side of the desired oversize dimension with a 10 microinch rms surface finish or better. See table 6-12, page 6-154. Polish to the required finish, if necessary. Check the hole size and finish using standard inspection equipment.

e. Unclamp the counterweight assembly and locate in a new position for grinding the other counterweight bushing hole to the proper oversize in the same manner as described in the preceding steps.

f. Holes must be parallel and square with the inside faces of the counterweights within 0.002 inch in six inches.

g. Magnetic particle inspect counterweights for grinding checks and/or cracks.

6-362. Install Bushings in One Side of Front and Rear Counterweight.

a. Chill bushings to approximately -57°C (-70°F) before installing.

b. Install support (3, figure 6-101) and spacer (4) in the counterweight slot with the nut clearing the bushing holes as shown.

c. Place the flat side of the counterweight assembly (7) down on proper base (5). Press the bushing in using plug (1) and proper pilot bushing (2), until seated against the base as shown.

NOTE

Do not remove the support (3) and spacer (4) until the opposite bushing has been installed.

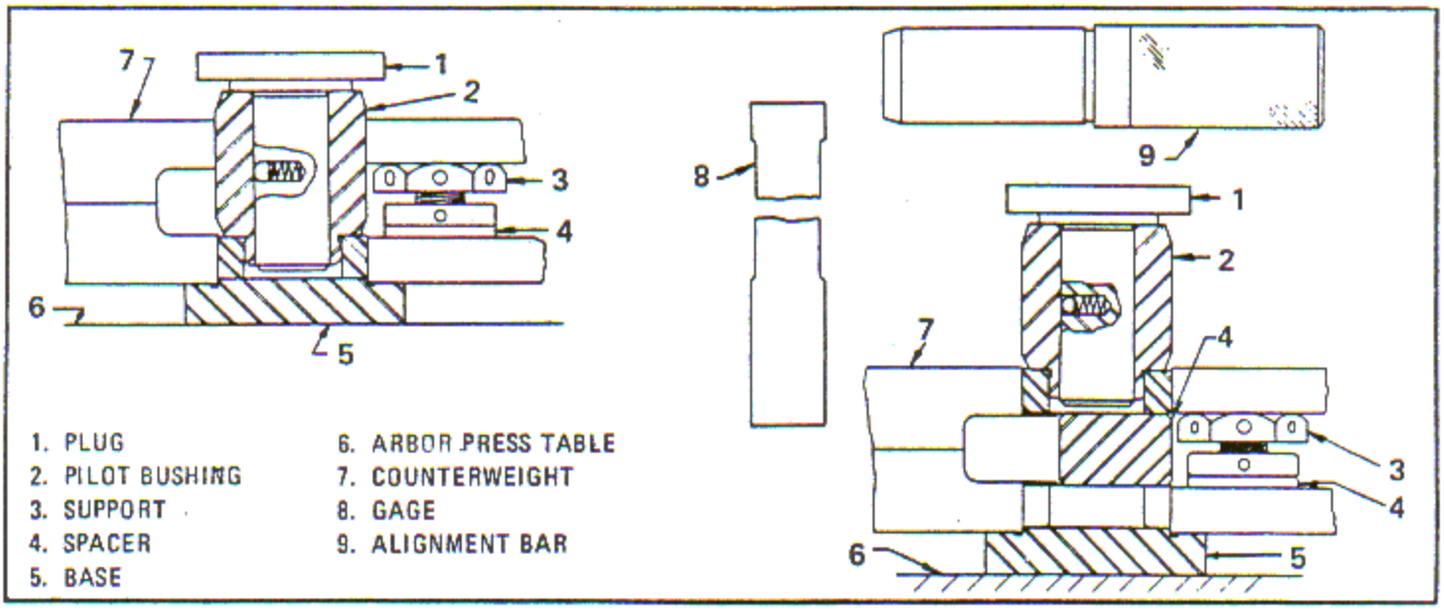

Figure 6-101. Installing Bushings in Front and Rear Counterweights

6-363. Install Bushing in Opposite Side of Front and Rear Counterweight.

a. Chill the bushings to approximately -57°C (-70°F).

b. Place proper base (5, figure 6-101) under the first installed bushing and place spacer (4) on top of the bushing as shown.

c. Press in the bushing using plug (1) and proper pilot bushing (2). Ensure the counterweight bushing has contacted the spacer (4) properly.

d. Check spacing of bushings using width gage (8). Check alignment of bushings using proper alignment bar (9).

6-364. Remove Front Crankshaft Counterweight Bushings. Press out bushings as shown using plug (4, figure 6-102) and proper pilot bushing (1).

6-365. Remove Rear Crankshaft Counterweight Bearings. Press out bearings as shown using plug (4, figure 6-102) and pilot bushing (1).

6-366. Inspection and Marking of Rear Crankshaft Counterweight Bearings. Ensure all rear crankshaft counterweight bearings are initially marked in accordance with the following instructions:

a. Place the crankshaft rear blade on a work bench with the rear main bearing journal facing upward.

b. Place a straightedge across both bearings through their approximate centerlines.

c. Vibro-peen or scribe a short line at each of the four locations where the straightedge crosses the anti-prop end face of the bearings.

NOTE

Do not mark the crankshaft rear blade.

d. Mark rear crankshaft counterweight bearings in accordance with above instructions whenever they are replaced.

e. Examine marked rear crankshaft counterweight bearings for rotation by placing a straightedge across the approximate centerline of both bearings. If the marks on a bearing are displaced more than one-fourth of an inch from the reference line, bearing replacement is required.

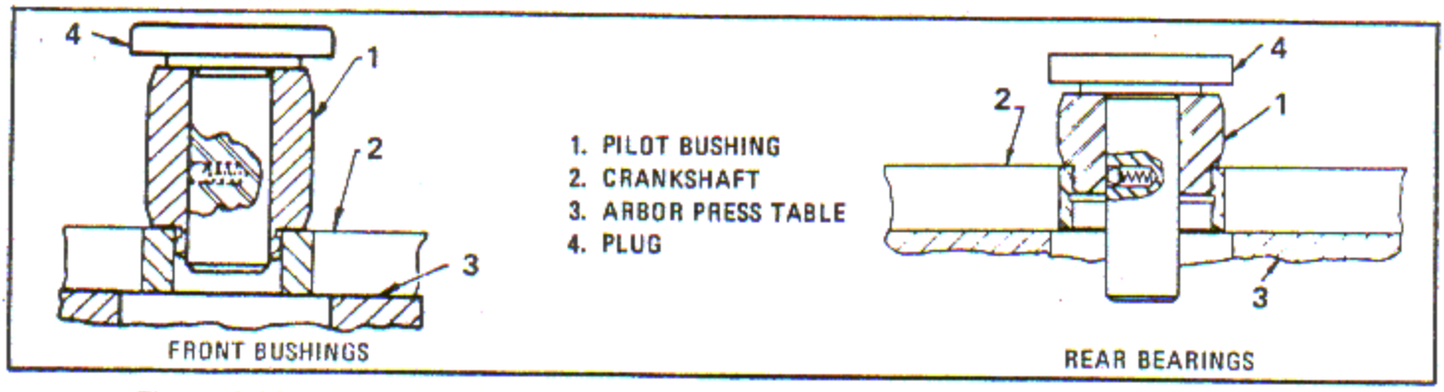

Figure 6-102. Removing Front Crankshaft Counterweight Bushing and Rear Crankshaft Counterweight Bearing

6-367. Grind Front Crankshaft Counterweight Bushing Holes.

NOTE

Omit this instruction if the bushing bores are not scored or fretted and the Table of Limits fit can be obtained. Crankshaft bushings must be replaced in sets of two.

a. Mount fixture (2, figure 6-103) on the table of a suitable grinder. Indicate the 2-1/8 inch diameter ground bore in the center of the fixture to run true within 0.0005 inch full indicator reading. Clamp the fixture securely.

b. Install front crankshaft in the fixture (2) and align the bushing hole with locating plug (1) in the fixture pilot bushing (4).

NOTE

Point the arrow on the locating plug toward the hole to be machined to properly position the crankshaft.

c. Clamp securely in position. Grind the bushing hole to the dimension shown in the following list using a suitable grinding wheel and coolant blend No. 51 to obtain a finish of 32 microinches rms or better. Check hole size and surface finish using standard inspection equipment.

d. To grind the second bushing hole, loosen the clamps, pivot the crankshaft and insert the locating plug for positioning into the newly ground hole as previously outlined. Clamp the crankshaft securely and grind the bushing hole to its proper oversize. Check hole size and surface finish as in the foregoing.

e. Holes must be parallel and square with both crankshaft faces within 0.002 inch in six inches. Magnetic particle inspect the crankshaft for grinding checks and cracks.

Oversize (Inch)	Diameter (Inches)
0.002	2.0132 - 2.0142
0.004	2.0152 - 2.0162
0.006	2.0172 - 2.0182
0.008	2.0192 - 2.0202
0.010	2.0212 - 2.0222

6-368. Polish Rear Crankshaft Counterweight Holes.

NOTE

Omit this instruction if bearing bores are not scored or fretted and the proper Table of Limits can be obtained. Crankshaft bearings must be replaced in sets of two.

a. Polish or hone the holes, maintaining standard size or 0.002 inch oversize, as shown in the following chart, to remove scores or fretting using standard shop procedures. When honing, use coolant blend No. 82.

b. Produce a 32 microinch rms finish or better. Check the hole size and surface finish using standard inspection equipment.

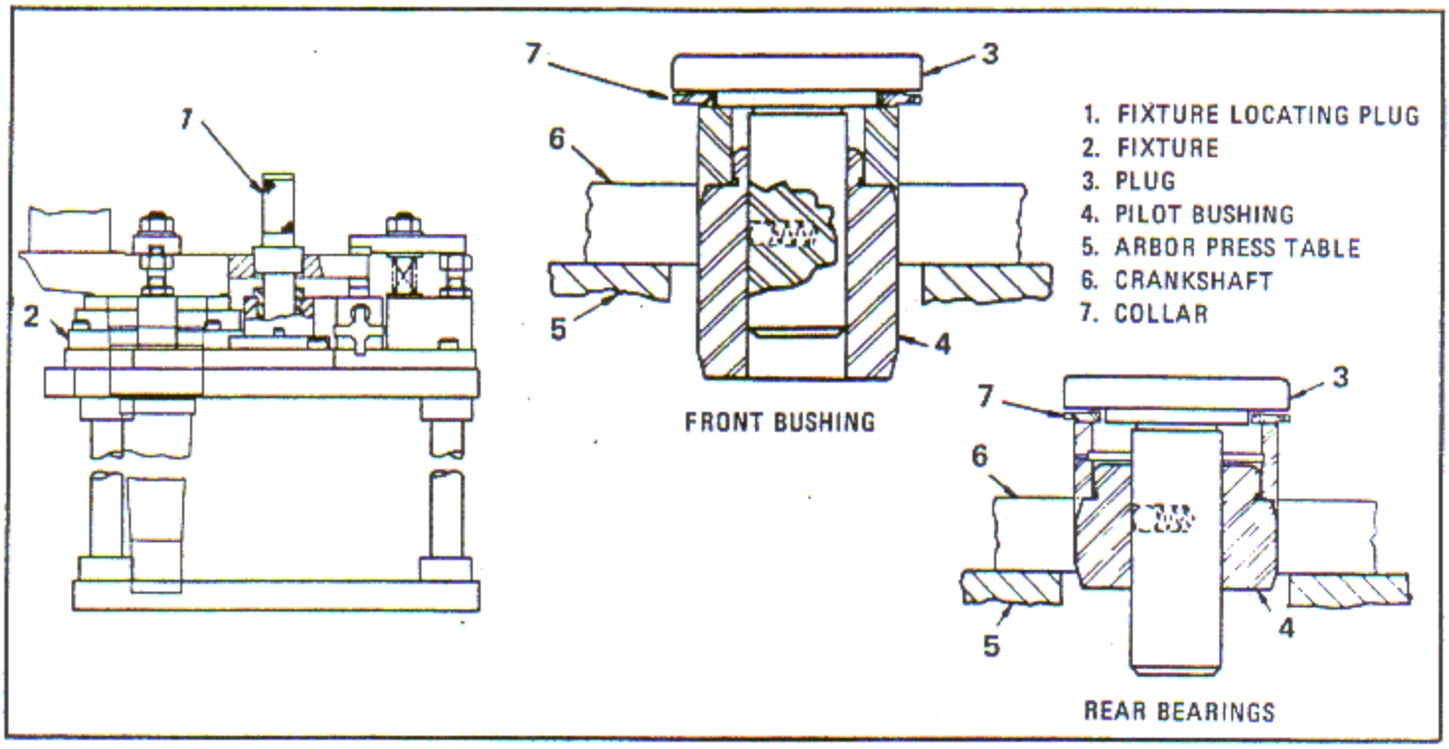

Figure 6-103. Front Crankcase Counterweight Bushings and Rear Crankcase Counterweight Bearings

c. Holes must be parallel and square with both crankshaft faces within 0.002 inch in six inches. Magnetic particle inspect the crankshaft for checks and cracks.

Size	Diameter (Inches)
Standard	2.250 - 2.251
0.002 OS	2.252 - 2.253

6-369. Install Front Crankshaft Counterweight Bushings.

a. Chill bushings to approximately -57°C (-70°F) before installing. Press bushings in, as shown, using collar (7, figure 6-103), (use proper side of collar to press in bushing 0.003 inch below flush), plug (3), and pilot bushing (4), until the collar is tight against the crankshaft.

b. Check contact with a 0.0015 inch feeler gage.

6-370. Install Rear Crankshaft Counterweight Bearings.

a. Chill bearings to approximately -57°C (-70°F) before installing.

b. Press in bearings using collar (7, figure 6-103), (use proper side of collar to press in bearings 0.003 inch below flush), plug (3), and pilot bushing (4), until the collar is tight against the crankshaft.

c. Check contact with a 0.0015 inch feeler gage.

NOTE

All new rear crankshaft counterweight bushings are to be marked as outlined in the following steps.

d. Place the crankshaft rear blade on a work bench with the rear main bearing journal facing upward.

e. Place a straightedge across both bearings through their approximate centerlines.

f. Vibro-peen or scribe a short line at each of the four locations where the straightedge crosses the anti-prop end face of the bearings.

NOTE

Do not mark the crankshaft rear blade.

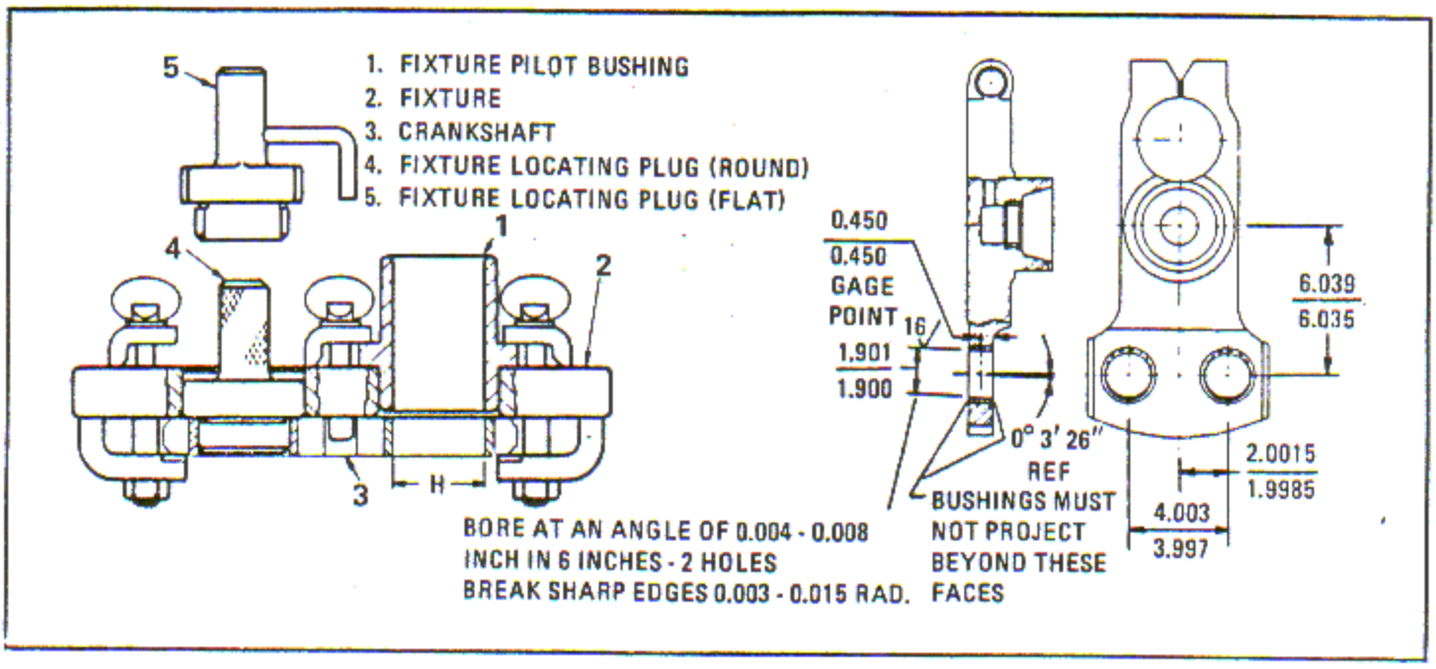

Figure 6-104. Finish Reaming Crankshaft Counterweight Bearings

6-371. Finish Ream Rear Crankshaft Counterweight Bearings.

NOTE

If the tooling and procedure contained in this instruction are not used, the 0 degree, 3 minutes, 26 second angle must be incorporated. The fixture specified in this instruction is designed to provide the angle specified.

a. Clamp the rear crankshaft (3, figure 6-104) finger tight to fixture (2), as shown. Remove the fixture pilot bushing (1) from the fixture. Align the fixture holes with the crankshaft counterweight bearings using the round fixture locating plug (4) as shown. Use the flat fixture locating plug (5) in the other bearing so that the flats on the plug are parallel with the end of the fixture. Clamp the crankshaft tightly in the fixture.

CAUTION

Do not loosen the clamps holding the crankshaft to the fixture until after both bearings are reamed.

b. Remove the flat fixture locating plug (5). Insert the fixture pilot bushing (1) and clamp tightly to the fixture (2) with the thumb screws and clamps as shown.

c. Place the fixture (2) containing the rear crankshaft (3) on a drill press tube using parallels as necessary and clamp lightly.

d. Place shell reamer, arbor, and floating holder in a spindle with the reamer in the fixture pilot bushing and align with the drill press spindle.

e. Clamp the fixture tightly to the drill press table. Ream the first bearing to a 1.900 - 1.901 inches diameter and a 16 microinch rms finish or better. Use a copious flow of coolant, blend No. 61.

f. Remove the fixture pilot bushing and check the reamed hole with limit plug gage.

g. Remove the round fixture locating plug (4) and replace with the fixture pilot bushing (1).

h. Clamp tightly with the thumb screws and clamps. Remove the clamps holding the fixture on the drill press table.

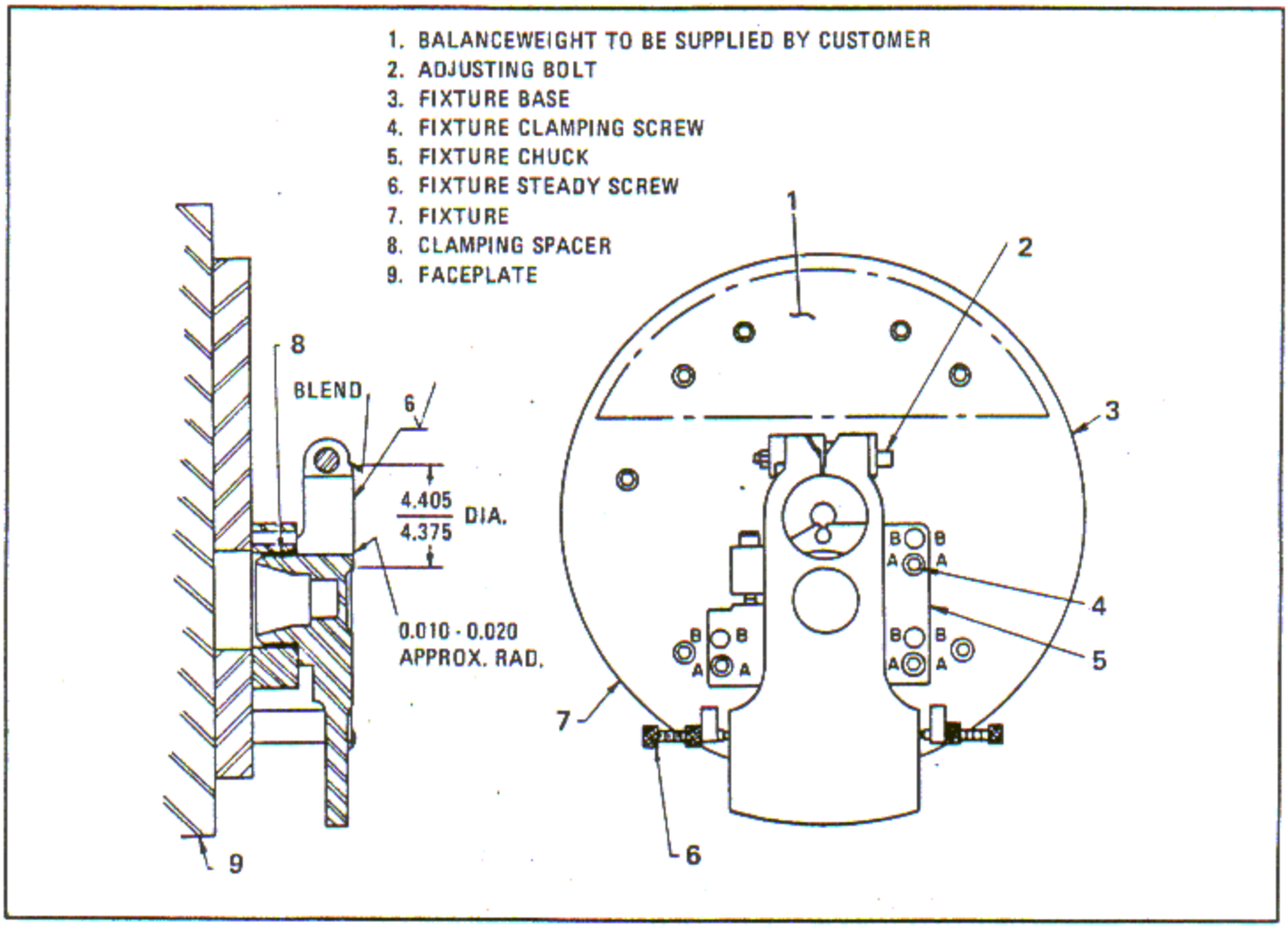

Figure 6-105. Rear Crankshaft Crankpin Bore Front Thrust Face Grinding

i. Ream the second bearing, repeating the clamping, aligning, machining, coolant and gaging procedures outlined for the first bearing.

6-372. CRANKSHAFT REAR END CRANKPIN BORE FRONT THRUST FACE GRINDING. (See tool group 29.)

a. Install crankcheek adjusting bolt (2, figure 6-105) into a thoroughly clean crankcheek.

b. Measure the crankcheek bore on several diameters with an inside micrometer. Turn the adjusting bolt (2) until the maximum circularity of the bore is obtained. Finger tighten the bolt jam nut.

c. Indicate the faceplate (9) of a suitable ID grinder and machine, if necessary, to run true within 0.0005 inch full indicator reading.

d. Clamp fixture (7) to the grinder faceplate (9). Indicate the fixture OD to run true within 0.001 inch full indicator reading. Clamp fixture tightly in position.

e. Clamp fixture chuck (5) to fixture base (3) and position clamping screws (4) in holes marked A.

f. Place clamping spacer (8) in fixture chuck (5). Load the rear crankcheek and assembled adjusting bolt (2) into the chuck, locating on the rear main bearing journal OD and against the face as shown. Clamp lightly in position.

g. Indicate the full length of the crankcheek clamping bore to run true within 0.001 inch full indicator reading. Rotate the crankcheek in the chuck or move the fixture or chuck as necessary to

true up the bore. Clamp tightly in position using the fixture steady screws (6, figure 6-105) and clamping screws (4). Reindicate to ensure trueness of positioning after final clamping.

h. Apply a thin coat of Dykem Blue, or equivalent, to the face area surrounding the crankcheek clamping hole.

i. Assemble a 2 x 1 x 3/8 inch cup type grinding wheel (Norton 19A46-L5VBE, Norton Company, Worcester, Mass., or equivalent) to the grinding head quill. Operate grinding wheel at 5000 surface feet per minute. Dress wheel as required.

j. Grind the crankcheek face to clean up only and to a diameter of 4.375 - 4.405 inches. Use a copious flow of coolant as specified in paragraph 6-197. Crankcheek faces may be ground to a maximum depth of 0.010 inch, measured from the unground surface.

k. Polish using abrasive cloth, Federal Specification P-C-451 and P-C-458, to achieve a surface finish of 6 microinches rms or better with a breakedge of 0.010 - 0.020 inch approximate radius at the clamping hole diameter. Blend the face diameter to remove any sharp corners. Restore the chamfer on the thrust face adjacent to the clamp joint as shown in figure 6-105A. Stone or polish edges to smoothly blend into adjoining surfaces with 0.03 - 0.06 approximate radius, taking care not to scratch the thrust face.

l. Inspect surface finish and dimensions using standard inspection equipment.

m. Perform a magnetic particle inspection in accordance with the procedures outlined in paragraph 6-26. Inspect for cracks, inclusions or other defects. Demagnetize after inspection.

6-373. CRANKSHAFT REAR END, REMOVAL OF NITRIDE CASE CRACKS AT CLAMP BOLT AREA.

6-374. Inspect Crankshaft Rear.

a. Inspect the crankshaft rear end using magnetic particle or dye penetrant method in accordance with paragraph 6-26 or 6-48.

b. Crankshafts exhibiting nitride case cracks in the area of the clamp bolt counterbore and threaded end face corner may be reworked to remove the cracks.

6-375. Recondition Crankshaft.

a. Rear crankshaft sections exhibiting nitride cracks in the area indicated in figure 6-106 shall be reworked by standard machining, grinding and polishing methods to remove the cracks within the limits shown in the figure.

b. If cracks do not extend into the flat counterbored surface for the clamp bolt washer, it is not necessary to re-counterbore the surface for removal of material. Remove 0.025 - 0.030 inch of material from the other areas as shown.

c. If cracks do extend into the flat counterbored surface for the clamp bolt washer, it is necessary to remove approximately 0.025 - 0.035 inch of material from this surface by re-counterboring to ensure a perpendicularity 0.002 inch to the clamp bolt bore.

d. Remove 0.025 - 0.030 inch of material in the other areas indicated.

e. Magnetic particle inspect the part by end-to-end and coil methods to ensure complete removal of the cracks.

6-376. CRANKSHAFT REAR END SALVAGE WHEN ACCESSORY DRIVE AND STARTER SHAFT COUPLING SPLINES ARE WORN.

6-377. Crankshaft rear ends with excessively worn accessory drive and starter shaft coupling splines are to be salvaged in accordance with paragraphs 6-378 through 6-382.

6-378. Remove ID Splines and Cut Retaining Ring Groove in Crankshaft Rear.

a. Assemble a suitable faceplate on a lathe and indicate the surface to run dead true. See figure 6-107.

NOTE

If necessary, take a skim cut from the lathe face plate to obtain this trueness.

b. Stone the forward face of the crankshaft rear end to remove any raised metal. Centralize and lightly clamp the crankshaft rear end to the faceplate.

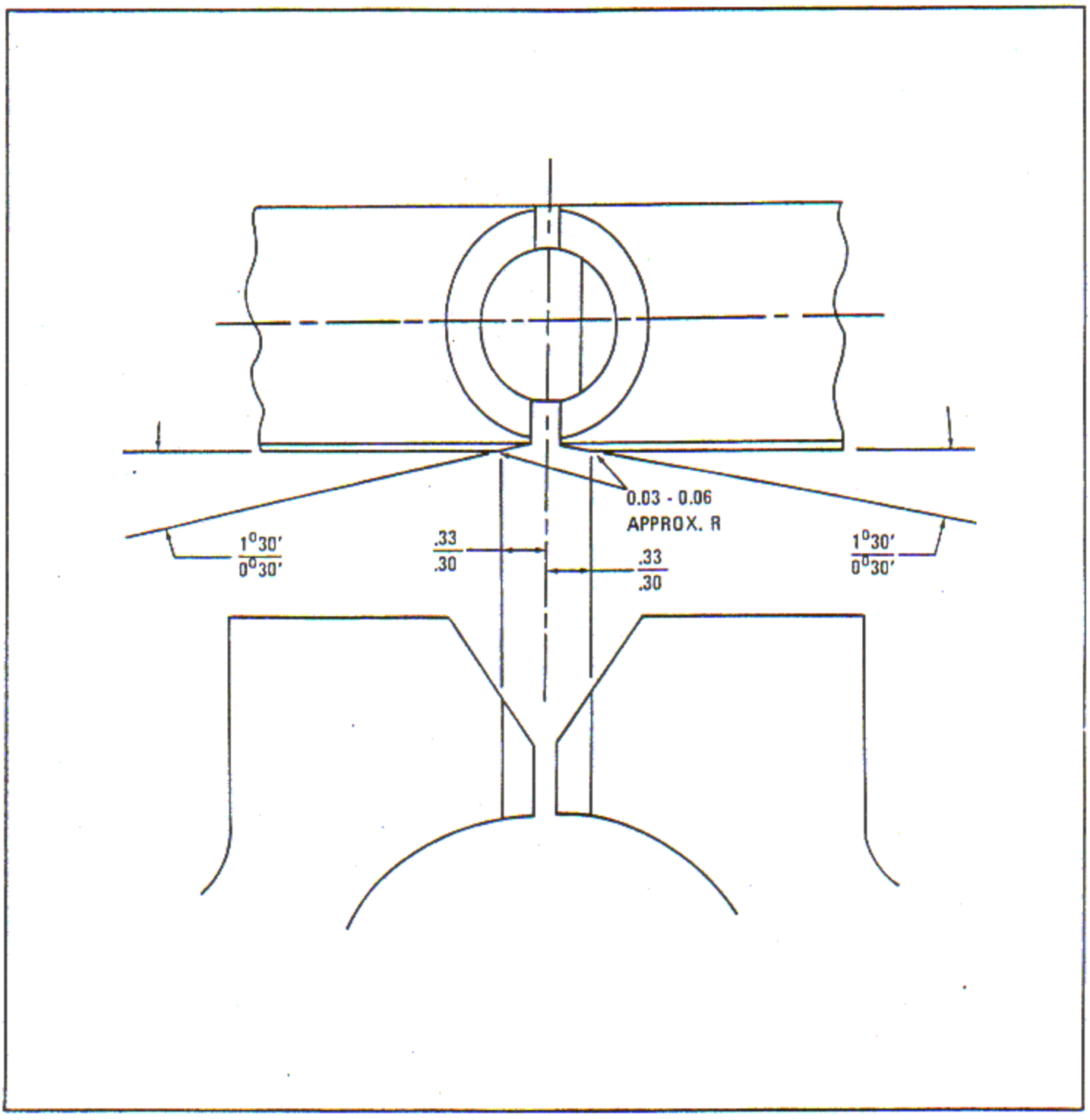

6-105A. Rear Crankshaft Crankpin Bore Front Thrust Face Chamfer Restoring

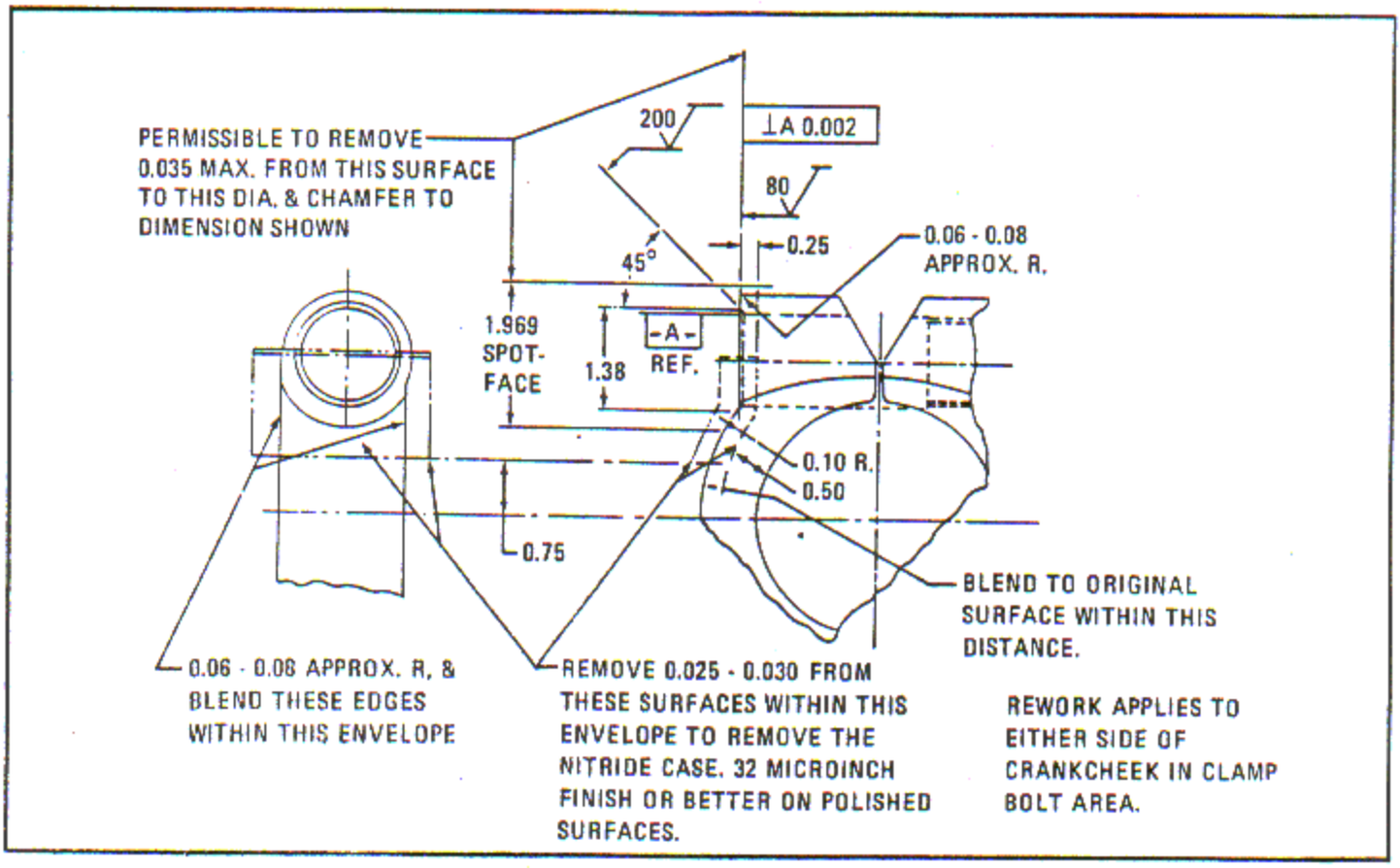

Figure 6-106. Remove Nitride Case Cracks at Clamp Bolt Area

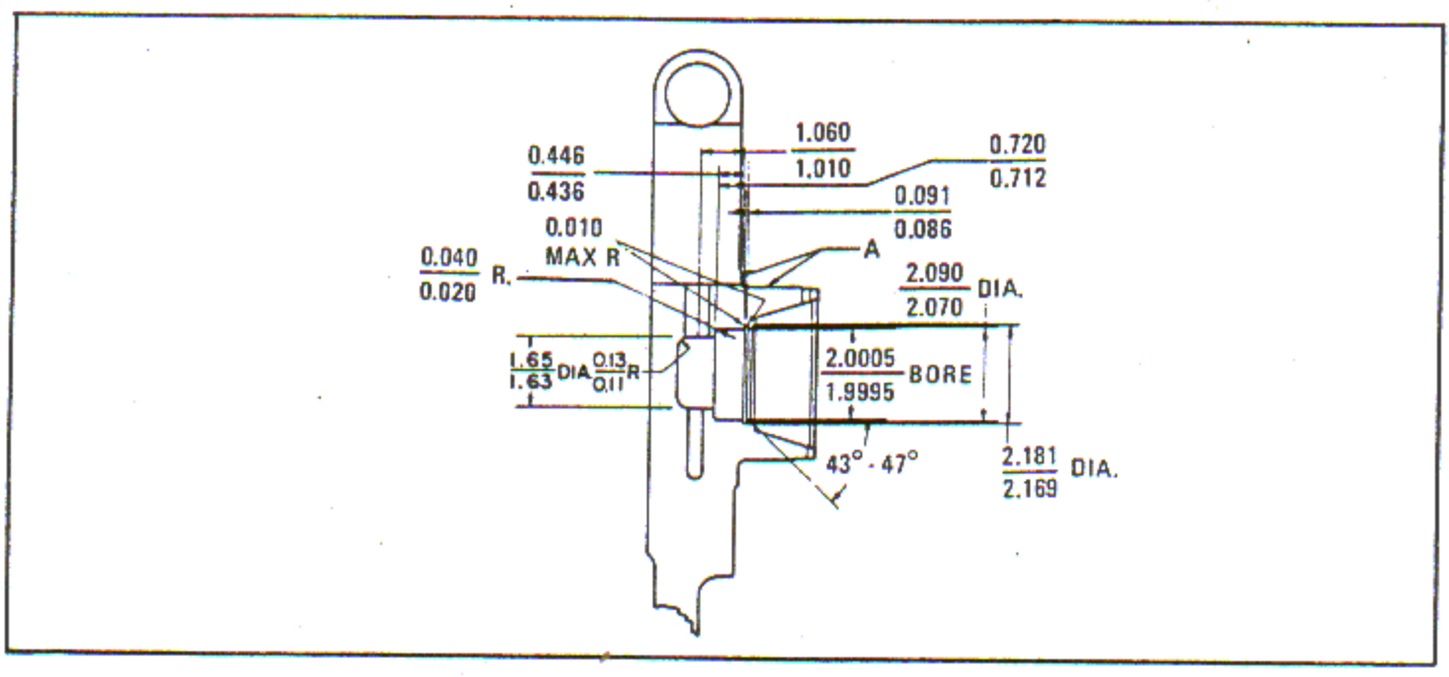

Figure 6-107. Remove ID Splines and Cut Retaining Ring Groove

c. Indicate the rear main bearing journal OD and thrust face to run true and square within 0.0004 inch full indicator reading as shown at A. Clamp the crankshaft tightly and recheck the indicator readings.

d. Bore the ID to increase the diameter of the oil cavity from 1.490 inches to 1.640 inches ± 0.010 inch. Machine to a depth of 1.010 - 1.060 inches from the rear main bearing journal thrust face. Grind the tool to cut a 0.110 - 0.130 inch corner radius. Blend the radius into the existing 0.320 inch radius as shown.

NOTE

The required surface finish on this and the following machined surfaces is 32 microinches rms or better.

e. Remove the splines by boring the ID to 1.9995 - 2.0005 inches diameter and a depth of 0.436 - 0.446 inch measured from the rear main bearing journal thrust face; include a 0.020 - 0.040 inch corner radius.

NOTE

Before taking the final cut indicate the bearing journal OD and thrust face to be within 0.0004 inch full indicator reading. After the final cut, the bore must be concentric with the journal within the 0.0004 inch.

f. Cut a 43-47 degree chamfer on the outside end of the bore to a diameter of 2.070 - 2.090 inches. Machine a 0.086 - 0.091 inch wide groove to a diameter of 2.169 - 2.181 inches with a 0.010 inch maximum corner radii. Locate the outside edge of the groove 0.712 - 0.720 inch from the bottom of the 1.9995 - 2.0005 inch bore. Break all sharp edges 0.010 - 0.030 inch approximate radius and blend.

6-379. REAR CRANKSHAFT, NON-FUNCTIONAL OIL HOLE PLUGGING.

a. When couplings are replaced, rear crankshafts with oil passages drilled will be cleaned in accordance with paragraph 5-38.

b. Plug the oil hole as follows.

c. Measure hole I.D.

d. Select plug (see listing below).

e. Press plug into hole, installing open end first until closed end of plug is flush with surface. Closed end of plug must not be punctured.

Hole Size	Use Plug O.D.	Plug Part No.
0.3270 - 0.3300 in.	0.3315 - 0.3330 in.	E31-8066-1
0.3300 - 0.3330 in.	0.3345 - 0.3360 in.	E31-8066-2
0.3330 - 0.3360 in.	0.3375 - 0.3390 in.	E31-8066-3

6-380. ACCESSORY DRIVE AND STARTER SHAFT COUPLING INSTALLATION. (See tool group 28.)

a. Chill the accessory drive and starter shaft coupling to -57°C (-70°F), and heat the crankshaft rear to 135°C (275°F), using standard shop practices.

b. Press the coupling rapidly into the crankshaft to ensure the coupling seats properly. Hold pressure on the press ram until the part temperatures tend to equalize.

6-381. Machine Six Locking Pin Holes.

a. Attach drill jig to the crankshaft rear end and place the assembly on a suitable drill press table. See figure 6-108.

b. Install the 0.2817 inch diameter slip bushing in the drill jig. Place a suitable 9/32 inch flat bottom drill, ground to have a 0.005 - 0.025 inch corner radius, in the drill press spindle.

c. Spotface at six locations to a depth of 0.000 - 0.010 inch below the inner edge of the retaining ring groove, as shown.

NOTE

The six spotfaces will be equally spaced by the drill jig. Their angular location may vary freely. Ensure proper size drill and reamer are used when oversize pins are installed.

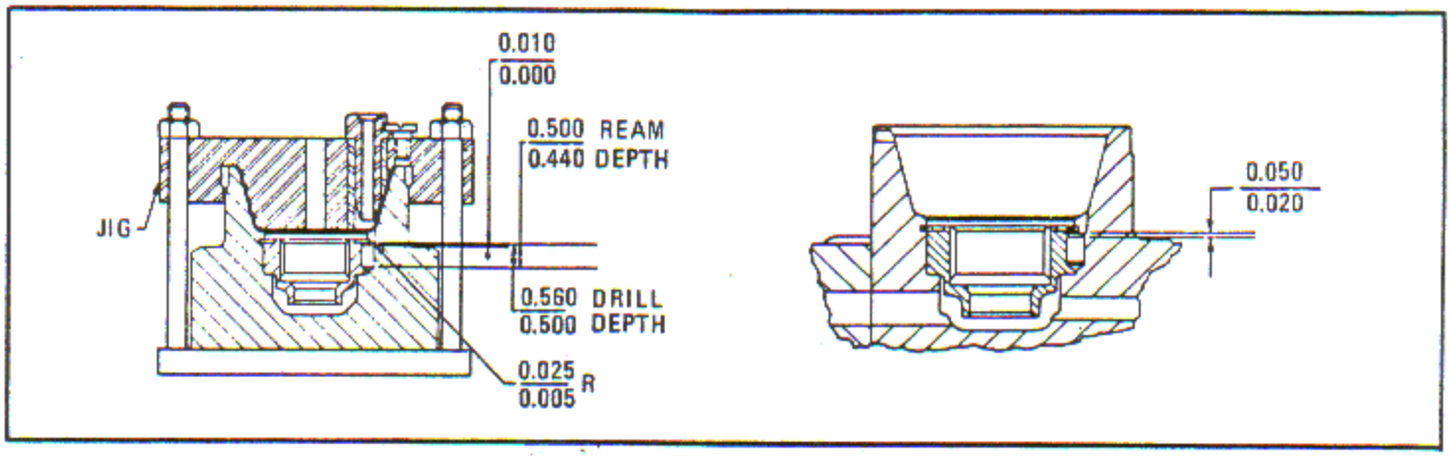

Figure 6-108. Machining Lock Pin Holes and Installing Pins

d. Install the 0.2348 inch diameter slip bushing in the drill jig and a suitable 15/64 inch drill in the drill press spindle. Drill six holes, one at each spotface, to a depth of 0.500 - 0.560 inch below the inner edge of the retaining ring groove. See figure 6-108.

e. Place the 0.2497 inch slip bushing in the drill jig and a suitable 0.2495 inch reamer in the drill press spindle. Ream the six holes to a depth of 0.440 - 0.500 inch below the inner edge of the ring groove.

f. Remove the drill jig from the crankshaft rear. Break all sharp edges 0.010-0.030 inch approximate radius and blend.

6-382. Install Pins and Retaining Ring.

a. Place the crankshaft rear end on a suitable arbor press table. Align the accessory drive and starter shaft coupling location under the press ram.

b. Lubricate the pins with caster oil, Federal Specification, JJJ-C-86. Using a drift, press the pins into the crankshaft to a depth of 0.020 - 0.050 inch below the inner edge of the ring groove, as shown.

c. Install the retaining ring using pliers.

6-383. MASTER ROD KNUCKLE PIN HOLES GRINDING, PEENING AND HONING. (See tool group 82.)

NOTE

The +0.002 inch oversize hole need not be shot-peened since stock removal does not exceed the effective depth of peening. Hone to size in accordance with paragraph 6-386.

6-384. Grind Knuckle Pin Holes.

NOTE

Remove the piston pin bushing from the master rod to provide increased accuracy when centering in the piston pin bushing bore of the master rod, rather than centering in the bushing. Piston pin bushings are to be removed or installed in accordance with paragraph 6-391.

a. Subject rod to magnetic particle inspection and reject if it does not meet inspection standards. Inspect knuckle pin holes. If the holes exceed the maximum oversize diameter as listed after grinding, the rod will no longer be suitable for service use.

b. Disassemble fixture base from fixture. Clamp base to spindle of No. 16-38 Bryant grinder (Bryant Chucking Grinder Co., Springfield, Vt.) or equivalent, fitting the shallow tapered bore of base to spindle and indicating the central bushing to run true within 0.0005 inch full indicator reading. Reassemble fixture.

c. Mount master rod on fixture with bearing hole over center plug. Locate piston pin hole over the fixture plug and the applicable standard or oversize centering roll. Clamp a large washer securely against the outer bearing hub. Loosen the three fixture capscrews before indexing, then tighten the capscrews securely.

d. Use Norton 3860K5BE grinding wheels (Norton Co., Worcester 6, Mass., or equivalent) 1-1/8 inch diameter x 3/4 inch long and the proper coolant as specified in paragraph 6-197. Use the double diamond truing device on grinder to obtain tandem wheels of two diameters when grinding rods having step diameter knuckle pin holes. The required surface finish of the knuckle pin hole is 32 microinches rms or better.

e. Set checking gage with proper master ring gage and check ground holes to size. Refer to the following list.

Small ID (Inches)	OS (Inch)	Large ID (Inches)
1.1510	0.0050	1.2010
1.1535	0.0075	1.2035
1.1560	0.0100	1.2060
1.1585	0.0125	1.2085
1.1610	0.0150	1.2110
1.1660	0.0200	1.2160

NOTE

All dimensions given in the preceding list have a tolerance of -0.000 inch, +0.001 inch.

6-385. Shot Peen Master Rod.

CAUTION

To obtain adequate coverage when shot peening the master rod knuckle pin holes, it is imperative to adhere to the following requirements.

a. Air pressure is regarded as the main factor in obtaining adequate coverage and the specified intensity of 10A1. Therefore, it is absolutely necessary that an air pressure regulator and a pressure gage be provided in the air inlet line to the cabinet (Pangborn type EN-2, Pangborn Corp., Hagerstown, Maryland). A condensation trap must also be provided in the line to prevent caking and/or rusting of the peening shot.

NOTE

All instructions herein are based on the use of a 3/8 inch diameter nozzle and a 5/32 inch diameter air jet installed in a Pangborn blast gun. However, it is permissible to use larger sizes provided they are used in the size combinations contained in the following list.

Nozzle Dia	1/2 in.	5/8 in.	3/4 in.
Air Jet Dia	7/32 in.	9/32 in.	5/16 or 11/32 in.

b. The basic formula shown in this step is used for shot peening. It is not considered conclusive for obtaining the specified intensity and coverage but only to assist in setting up for exposure of Almen test strips.

Distance from nozzle to work	5-1/2 inches
Nozzle angle	36 degrees
Air Pressure (constant)	80 psi
Work Speed	1/2 rpm
Revolutions	3

c. Thoroughly degrease the master rod and blow dry with compressed air.

d. Adjust the dial indicator of the No. 1 Almen gage by placing the Almen A test strip (10, figure 6-109) across and against the knife edges. Zero the dial. Adjust the two socket set-screws in the gage base, if necessary, to obtain the desired position. Assemble the test strip to holder (11). Secure the holder to fixture (8) in the same relative position as the master rod knuckle pin hole would locate. Adjust the holder vertically to approximately the center of the surface to be peened. Mask the exposed locating surfaces and diameters of fixture and the back and sides of the test strip holder using a rubber sheet (7) or masking tape.

e. Place turntable unit (6) in the center of the cabinet (1) to ensure that the rod will clear the cabinet walls. Bolt the cabinet nozzle (4) holding bracket (3) to the cabinet ceiling and clamp the nozzle to the bracket. Aim the nozzle at the center of the test strip by adjusting the nozzle vertically. Position the nozzle 5-1/2 inches from the strip.

f. Fill the cabinet hopper with approximately 200 pounds of peening shot, size 330 SAE (Pangborn Corp., Hagerstown, Md.) and expose the test strip to the blast for the approximate specified time and rpm. Remove the test strip from the holder and check the curvature with a gage (2) without disturbing the turntable location in the cabinet. The highest gage reading indicates the intensity to which the part will be peened.

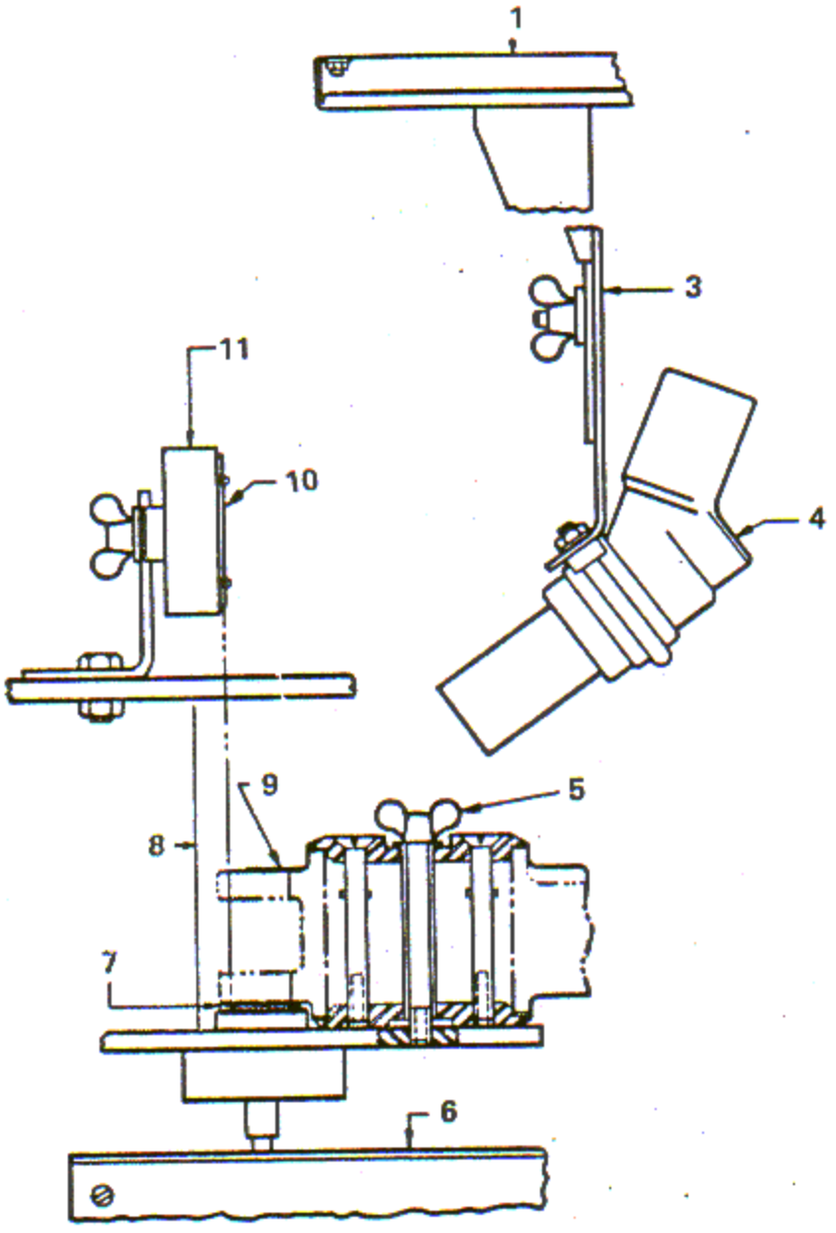

1. CABINET
2. INDICATOR GAGE
3. BRACKET
4. NOZZLE
5. FIXTURE WING BOLT
6. TURNTABLE UNIT
7. RUBBER STRIP
8. FIXTURE
9. MASKING TAPE
10. ALEMN STRIP
11. HOLDER

Figure 6-109. Shot Peening Knuckle Pin Holes

NOTE

Alternate shot size 230 may be used for this operation. Shot must conform to the requirements of MIL-S-13165B.

g. Check the test strip microscopically to determine whether complete coverage is obtained. Adjustments necessary to obtain the specified intensity should be made by increasing or decreasing the air pressure.

h. After satisfactory results are obtained on the test strip, remove the test strip holder from the fixture.

i. Assemble the top and bottom fixture plates over the master rod bearing bore and mask the hub diameters and flange out to a 6-3/4 inch diameter with double thickness masking tape (9, figure 6-109) as shown. Mask the piston pin hole with masking tape or a rubber boot.

j. Place the master rod on the fixture (8) with the fixture index plunger in the first knuckle pin hole to be peened and fasten the rod to the fixture using the fixture wing bolt. Depress the indexing plunger and place a 1/16 inch thick by 1-1/2 inch square rubber strip between the plunger and the master rod as shown to protect the plunger from damage during peening.

k. Expose the master rod knuckle pin hole to shot blast using the same rpm and timing to which the Almen strip was exposed. Clear the fixture and rod from any stray shot using compressed air, but do not disturb the turntable position in the cabinet. Loosen the wing bolt and remove the rubber strip from the plunger. Rotate rod until the next knuckle pin hole is engaged by the plunger.

l. Tighten the wing bolt and depress plunger. Insert the rubber strip and shot-peen knuckle pin hole.

NOTE

Repeat this operation on the remaining holes on this side.

m. Upon completion, remove wing bolt, turn rod over, place it on fixture and clamp it with the wing bolt. Shot peen the holes in the same manner as for reverse side.

n. Thoroughly wash the rod and slush with corrosion preventive compound, Military Specification MIL-C-16173.

o. Perform a periodic examination of the quantity and condition of the shot. When more than one-third is found broken or fractured, discard the shot or discard the damaged shot by screening.

p. Always keep sufficient shot in the hopper to ensure a continuous flow. Prior to shot peening each rod, expose a new test strip to ensure that the peening intensity has not changed.

6-386. Hone Knuckle Pin Holes.

a. Place fixture on a Barnes Honing Machine No. 172 (W.F. Barnes Co., Rockford, Illinois) or equivalent and insert hone holder and hone body in the machine spindle, supporting the hone by means of the actuating bushing.

b. Slip upper fixture bushing over hone body, align fixture with bushing, clamp bushing to fixture and fixture to machine table. Bolt adapter to fixture and locator to the retractable plug.

c. Clamp the master rod, having stepped knuckle pin holes, to the adapter with the larger knuckle pin hole toward the hone and the location in the first hole to be honed. Retract the locator. Hone both holes simultaneously using a copious flow of coolant.

d. Check the diameter of the holes with checking gage, set with the proper master ring gage for oversize listed.

Small ID (Inches)	OS (Inch)	Large ID (Inches)
1.1500	0.0020	1.2000
1.1530	0.0050	1.2030
1.1555	0.0075	1.2055
1.1580	0.0100	1.2080
1.1605	0.0125	1.2105
1.1630	0.0150	1.2130
1.1680	0.0200	1.2180

NOTE

All dimensions given in this list have a tolerance of -0.0000 inch + 0.0008 inch.

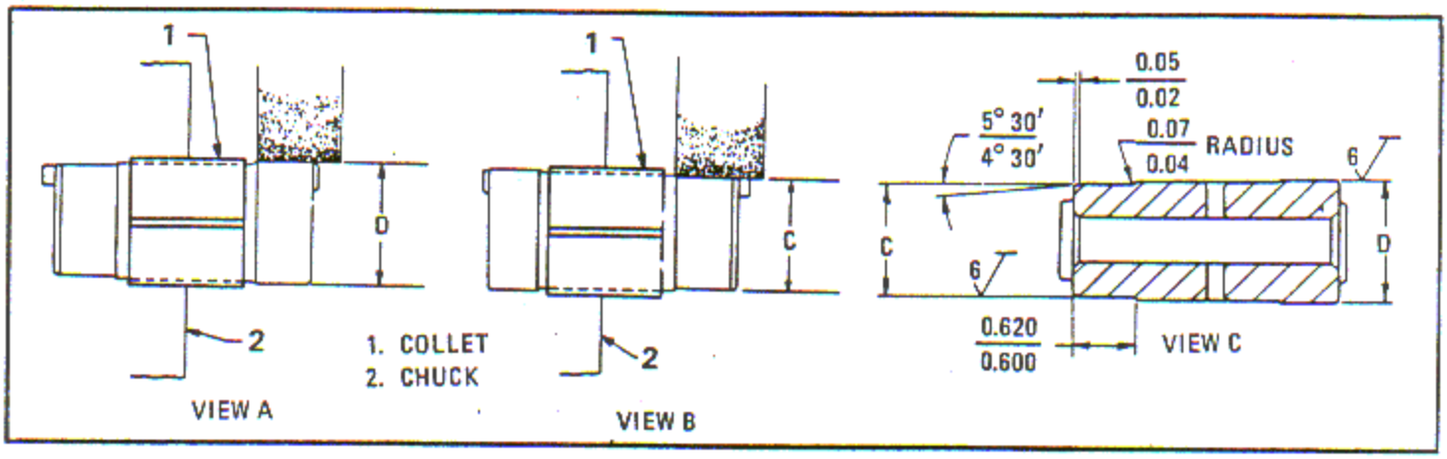

Figure 6-110. Regrind Oversize Knuckle Pins

e. The surface finish of the hole is to be 6-13 microinches rms after honing. The maximum permissible surface finish at the knuckle pin hole is 120 microinches rms on surfaces where residual effects of shot peening remain.

f. Break all sharp corners 0.010 - 0.030 inch at ends of knuckle pin holes.

g. Install a new piston pin bushing into the master rod in accordance with paragraph 6-389.

h. Replacement of stones in their holders can be done by silver soldering.

6-387. KNUCKLE PIN GRINDING. (See tool group 77.)

6-387A. If oversize knuckle pins are worn or damaged on the surfaces that mate with the master rod holes, grind these surfaces to a smaller size in accordance with the following instructions.

6-388. Regrind Oversized Knuckle Pins.

a. Recondition worn oversize knuckle pins by grinding the two end diameters to the applicable smaller sizes as indicated in Table 6-13.

b. Insert knuckle pin in collet (1, figure 6-110) and install in a four jaw chuck (2) on a 12 inch universal grinder. See view B. Indicate the small end (C) of the pin to run true within 0.0005 inch full indicator reading.

c. Dress a 14 inch diameter x 1-1/2 inch thick grinding wheel (Catalog No. DA70-56-VII, Carborundum Company, Niagara Falls, N.Y., or equivalent) to obtain the 0.040 - 0.070 inch radius shown in view C.

d. Operate the grinding wheel at 1740 rpm, and the knuckle pin at 250 rpm in a direction opposite to the wheel. Use a generous flow of coolant blend No. 51. Refer to paragraph 6-197.

e. Grind and polish the small end of the pin to the applicable diameter (C) and to the length shown in view C. Grind the 0.020 - 0.050 inch x 4 degrees, 30 minutes to 5 degrees, 30 minutes chamfer shown. Break sharp edges 0.010 - 0.030 approximate radius. Polish with crocus cloth, Federal Specification P-C-458.

f. Reverse the knuckle pin and collet in the grinder chuck, as shown in view A. Indicate the large end (D) of the pin to run true within 0.0005 inch full indicator reading. Using the same procedure as outlined in step e, grind and polish to the applicable diameter (D).

g. After rework, the two ends and the center surfaces of the pin must be concentric, parallel, square and true (as applicable) to each other within 0.001 inch full indicator reading. The newly ground ends must be circular, parallel and straight within 0.0002 inch. The surface finish must be 6 microinches rms or better. Rockwell hardness check the new surfaces. Reject pins with a hardness below 15N90. Magnetic particle inspect all pins after grinding.

TABLE 6-13. KNUCKLE PIN GRINDING LIMITS

Original		Grind To			
Identify	OD	Small OD C	Large OD D	New Size	New Identity
Y2	+0.002	1.1477 - 1.1480	1.1977 - 1.1980	Std	Std - G2
Y1	+0.005	1.1497 - 1.1500	1.1997 - 1.2000	+0.002	Y5 - G1
		1.1477 - 1.1480	1.1977 - 1.1980	Std	Std - G2
Y6	+0.0075	1.1527 - 1.1530	1.2027 - 1.2030	+0.005	Y1 - G1
		1.1497 - 1.1500	1.1997 - 1.2000	+0.002	Y5 - G2
		1.1477 - 1.1480	1.1977 - 1.1980	Std	Std - G2
Y2	+0.010	1.1552 - 1.1555	1.2052 - 1.2055	+0.0075	Y6 - G1
		1.1527 - 1.1530	1.2027 - 1.2030	+0.005	Y1 - G1
		1.1497 - 1.1500	1.1997 - 1.2000	+0.002	Y5 - G1
		1.1477 - 1.1480	1.1977 - 1.1980	Std	Std - G2
Y7	+0.0125	1.1577 - 1.1580	1.2077 - 1.2080	+0.010	Y2 - G1
		1.1552 - 1.1555	1.2052 - 1.2055	+0.0075	Y6 - G1
		1.1527 - 1.1530	1.2027 - 1.2030	+0.005	Y1 - G2
Y3	+0.015	1.1602 - 1.1605	1.2102 - 1.2105	+0.0125	Y7 - G1
		1.1577 - 1.1580	1.2077 - 1.2080	+0.010	Y2 - G1
		1.1552 - 1.1555	1.2052 - 1.2055	+0.0075	Y6 - G1
		1.1527 - 1.1530	1.2027 - 1.2030	+0.005	Y1 - G2
Y4	+0.020	1.1627 - 1.1630	1.2127 - 1.2130	+0.015	Y3 - G1
		1.1602 - 1.1605	1.2102 - 1.2105	+0.0125	Y3 - G1
		1.1577 - 1.1580	1.2077 - 1.2080	+0.010	Y2 - G2

h. Reidentify the reground pins by rubber stamping the new Y number, or Standard and G1 or G2, whichever applies, on the end of the pin.

NOTE

G1 indicates that further regrinds are permissible. G2 indicates that no further grinding can be done.

6-389. PISTON AND KNUCKLE PIN BUSHING REPLACEMENT. (See tool groups 77 and 97.)

NOTE

It is extremely difficult to maintain the required parallelism tolerance between the knuckle pin and piston pin bushings when an attempt is made to replace and remachine either one separately. It is recommended therefore, that when either bushing requires replacement, the other bushing be replaced at the same time. However, if the articulated rod is inspected for twist and parallelism and found acceptable, it is permissible to replace only the knuckle pin bushing. Reboring of used knuckle pin bushings to fit oversize knuckle pins is not permitted.

6-390. Inspect Bushings and Rods.

a. Inspect articulated rod piston and knuckle pin bushings and master rod piston pin bushings for wear in accordance with paragraphs 6-94 and 6-99.

b. If bushings are worn sufficiently to require replacement proceed as instructed in paragraph 6-391.

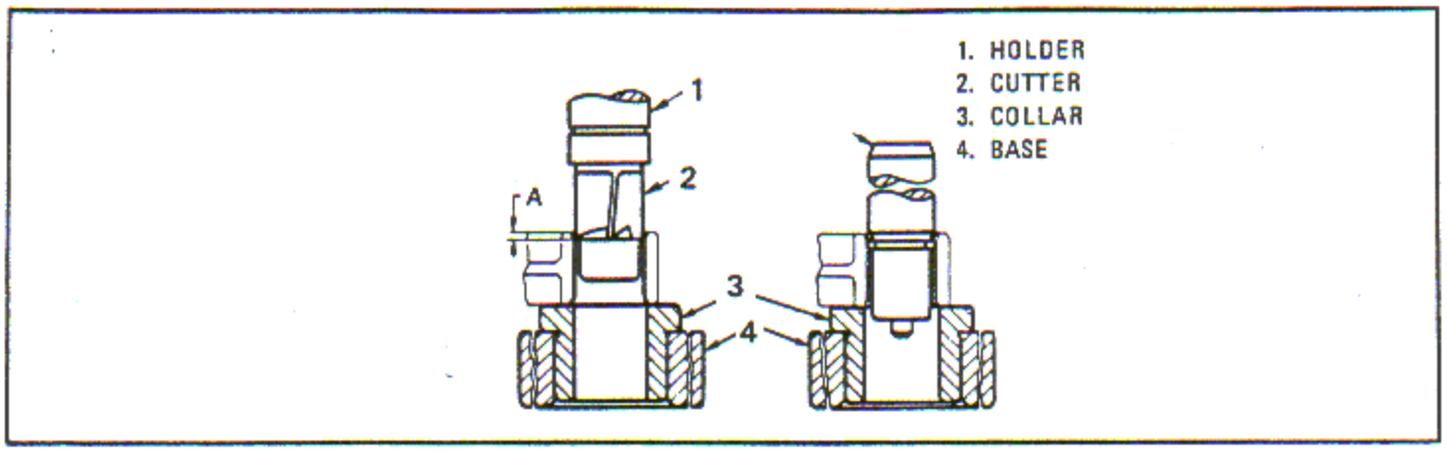

Figure 6-111. Removing Bushings

c. If bushings are within service limits and appear satisfactory for use, the rod must be inspected for parallelism, vertical and horizontal alignment and must meet all requirements as stated in paragraphs 6-88 and 6-97.

d. If rod assemblies are satisfactory when inspected, the assemblies may be placed into service.

6-391. Remove Piston and Knuckle Pin Bushings.

NOTE

In order to maintain required parallelism between the master rod piston pin bushing and the knuckle pin holes it is recommended that knuckle pin holes be reconditioned in accordance with paragraph 6-383 concurrently with the piston pin reconditioning.

a. Place base (4, figure 6-111) and collar (3) on the table of a suitable radial drill press. Support the piston pin end of the rod on the collar and clamp in position.

b. Using holder (Eclipse Counterbore Co., Detroit, Michigan, Cat. No. 2H-173, or equivalent), cutter and pilot, bore bushing to approximately 0.125 inch depth (A). Pick off spun end of bushing and press out the remainder on a suitable press using plug.

c. The articulated rod knuckle pin bushing is removed in the same manner using cutter (2), plug and collar (3).

d. Polish bores using suitable crocus cloth to remove minor scratches, nicks and burrs. Do not attempt to remove heavy indications, score marks or residual peening indications.

6-392. INSPECT MASTER/ARTICULATED ROD. (See tool groups 77 and 97.)

a. Inspect the detail rod for parallelism, vertical and horizontal alignment and visually inspect bores to determine if the surface is satisfactory for reassembly of new bushings. Surface finish of bores may be to a maximum of 250 microinches rms due to residual peening marks.

b. Rods must meet all requirements as stated in paragraphs 6-88 and 6-97. If rod bores are satisfactory, proceed as instructed in paragraph 6-395. If bores require oversizing proceed as instructed in paragraph 6-393.

6-393. Grind to Accommodate Oversize Bushings.

a. Lightly stone the flat surfaces on both sides of the piston and knuckle pin holes to remove minor nicks, burrs or scratches using a suitable flat honing stone.

b. Clamp the rod, supported by parallel blocks or rings, to the table of a suitable jig grinder. Indicate the piston pin and the knuckle pin/master rod bearing bore to run true within 0.002 inch in three inchess and clamp the rod tight. If necessary favor the master rod bearing bore.

c. Grind master rod piston pin bores and articulated rod/knuckle pin bores to applicable oversizes

indicated in the following list. Restore the chamfer and tag the rod to ensure installation of the proper size bushing at assembly.

d. The limits and criteria for use of oversize OD articulated rod bushings are as follows:

Piston Pin Bushing Bore

Rod Bore Limits	Instructions
1.6260 in. dia max. - Std 1.6280 in. dia max. - +0.002 in. OS 1.6310 in. dia max. - +0.005 in. OS 1.6360 in. dia max. - +0.010 in. OS Out-of-round: 0.001 in. max. - All sizes	Use same oversize as previously installed.
Over 0.001 in. but within 0.003 in. out-of-round	Rework rod for next oversize bushing.
Over 0.003 in. out-of-round	Scrap rod

NOTE

The limits shown also apply to the piston pin bore of master rods.

Knuckle Pin Bushing Bore

Rod Bore Limits	Instructions
1.2950 in. dia max. 1.3000 in. dia max. - +0.005 in. OS Out-of-round: 0.001 in. max. - All sizes	Use same size as previously installed.
Over 0.001 in. but within 0.003 in. out-of-round	Rework rod for next oversize bushing.
Over 0.003 in. out-of-round	Scrap bushing.

e. Surface finish of bores, except 0.002 inch oversize, must be 50 microinches rms or better. Chamfer finish must be 80 microinches rms or better. Piston pin and knuckle pin bores/master rod bearing bore must be parallel within 0.002 inch in three inches. Flat ends must be parallel to each other and square with the bore within 0.005 inch full indicator reading.

f. Break sharp edges 0.010 - 0.020 inch approximate radius.

g. Check bore with appropriate plug gage.

h. Inspect rods for parallelism, vertical and horizontal alignment. Magnetic particle inspect for cracks in accordance with paragraph 6-26.

6-394. Shot Peen Bores.

NOTE

Holes oversized to +0.002 inch need not be shot peened since the stock removal does not exceed the effective depth of peening.

a. Shot peen bores per AMS 2430 to an intensity of 10A1 as instructed in paragraph 6-385.

b. Surface finish of shot peened holes must be 100 - 250 microinches rms.

c. The intensity of shot peening is optional between broken line as shown in figure 6-112.

6-395. Install New Bushing.

a. Place base (4, figure 6-113) and collar (3) on the bed of a suitable arbor press.

b. Determine the applicable piston pin bushing to be installed from the tag attached to the rod. Refer to paragraph 6-393. Assemble bushing on plug (2) and screw cap (1) tight.

c. Support the piston pin end of the rod on the collar (3) and base (4). Insert the plug through the collar locating the split in the bushing at a 45 degree angle and press in the bushing until the cap (1) contacts the rod. The bushing should extend equally on both sides of the rod after assembly.

d. Install the knuckle pin bushing in the articulated rod in the same manner supporting rod on plug and collar.

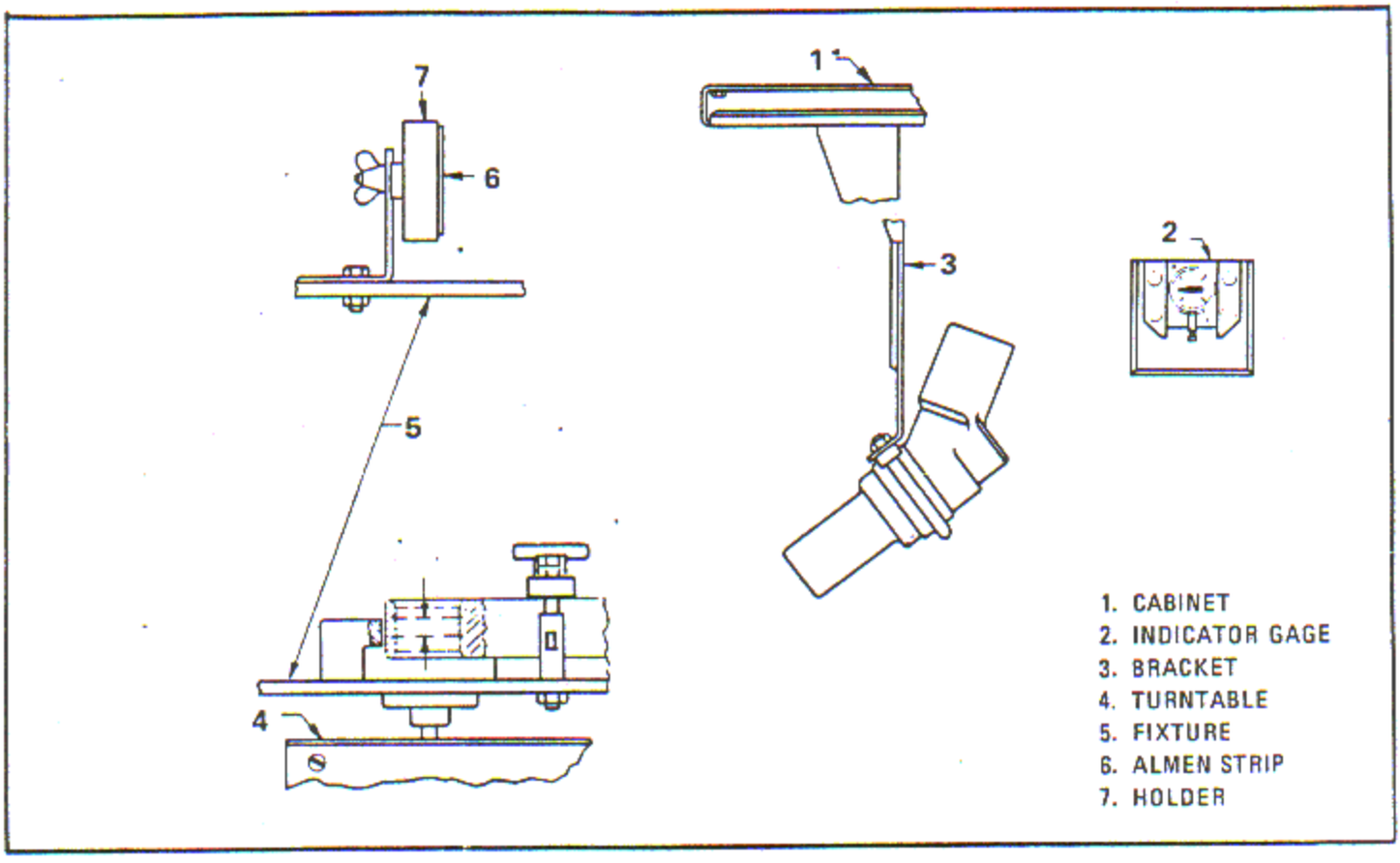

Figure 6-112. Shot Peening Knuckle/Piston Pin Holes

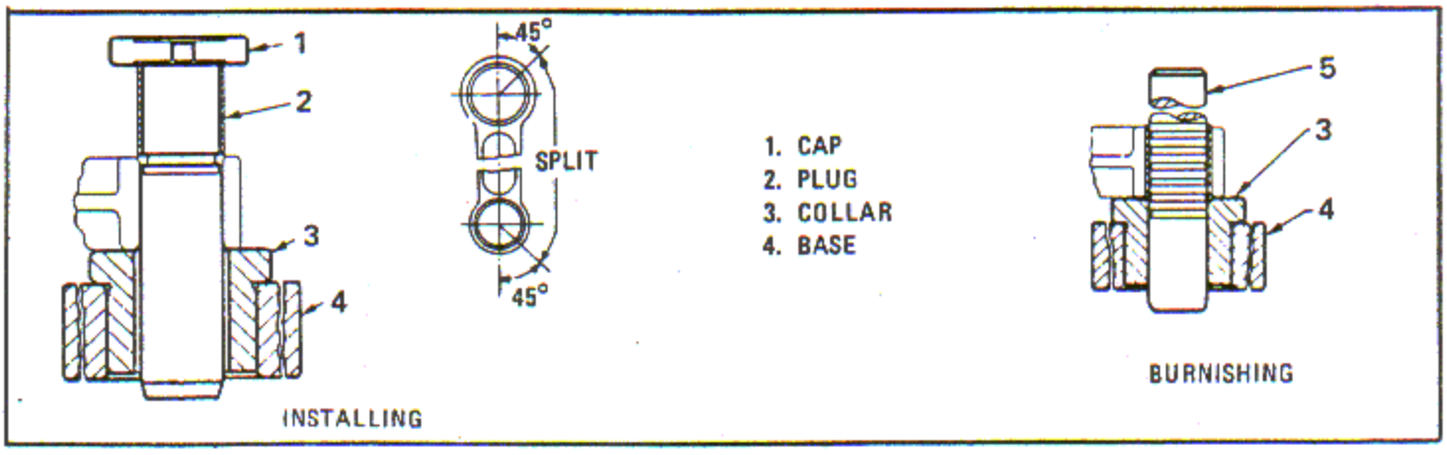

Figure 6-113. Install and Burnish New Bushing

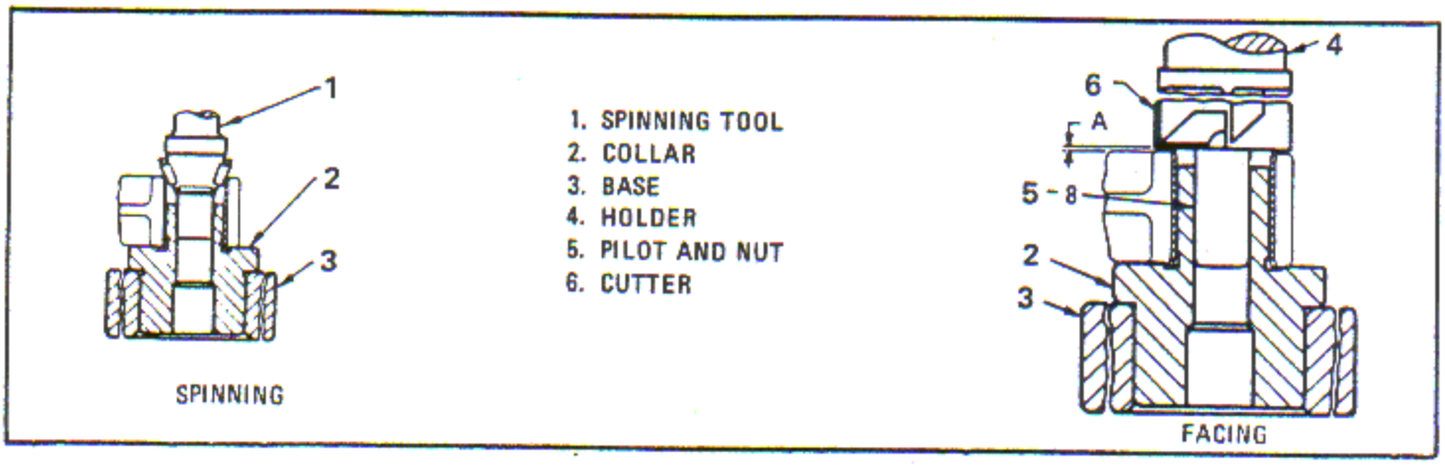

Figure 6-114. Spinning and Facing Bushing

e. Bushings are provided in the following oversizes.

Piston Pin Bushing

Oversize	Outside Diameter (Inches)
Standard	1.630 - 1.631
0.002	1.632 - 1.633
0.005	1.635 - 1.636
0.010	1.640 - 1.641

Knuckle Pin Bushing

Oversize	Outside Diameter (Inches)
Standard	1.299 - 1.300
0.005	1.304 - 1.305

NOTE

The dimensions given in previous list apply when split is closed and are included for reference only.

6-396. Burnish Bushing.

a. Place the base (4, figure 6-113) and collar (3) on the bed of a suitable hydraulic press and support the rod on the collar as shown. Provide sufficient clearance below for the broach.

b. Insert the radius end of the broach into the piston pin bushing and burnish through at a minimum load pressure of 6600 pounds. Lubricate the broach with white lead, Federal Specification TT-W-261 and caster oil, Federal Specification JJJ-C-86.

c. Repeat the operation for the knuckle pin end of the articulated rod using collar and broach. Burnish through at a minimum load pressure of 4000 pounds.

6-397. Spin Bushing.

a. Place base (3, figure 6-114) and collar (2) on the work table of a suitable radial drill press and support the rod on the collar as shown.

b. Insert spinning tool (1) in the machine spindle and align pilot in collar (2) as shown.

c. Using white lead, Federal Specification TT-W-261 and caster oil, Federal Specification JJJ-C-86 as a lubricant, spin the bushing end until firmly seated. Invert the rod and spin the opposite end of the bushing.

d. Remove the beads created by spinning using a suitable hand reamer or scraper.

e. Repeat the operation for the knuckle pin end of the articulated rod using proper collar (2) and spinning tool (1).

NOTE

The maximum chamfer permitted after finish machining of bushing is 0.060 inch.

6-398. Face Bushing.

a. Place base (3, figure 6-114) and collar (2) on the table of a suitable drill press and support the rod on the collar as shown.

b. Insert cutter (6) and holder (4, Eclipse Counterbore Co., Detroit, Michigan, Catalog No. EC-296 and 2H-M3, or equivalent) in the machine spindle and align cutter pilot in the collar.

c. Face bushing end to 0.000 - 0.002 inch above flush. Invert rod and face opposite side of bushing in the same manner.

d. Polish bushing end faces flush with rod faces using a suitable honing stone or fine emery cloth fastened to a wood block. Do not remove stock from the rod faces.

e. Surface finish of faces is to be 80 microinches rms or better.

f. Repeat the operation of the knuckle pin end of the articulated rod using the proper collar (2) and pilot (5).

NOTE

Both sides of the articulated rod must be parallel to each other within 0.005 inch at both ends.

6-399. Finish Bore Bushings.

a. Finish bore the inside diameter of bushings using Wadell Rod Boring Equipment, Wadell Equipment Co., 159 Terminal Ave., Clark, N.J.

b. Bore the piston pin bushings to a diameter of 1.5005 - 1.5015 inches. Bore the knuckle pin bushing to a diameter of 1.1915 - 1.1920 inches. Check bores with proper gage.

c. Break sharp edges 0.005 - 0.015 inch approximate radius.

d. Surface finish of bored holes must be 13 microinches rms or better.

e. Bores must be square with the end faces within 0.003 inch full indicator reading and both bores must be parallel in all planes within 0.002 inch in three inches.

f. A maximum spun chamfer of 0.060 inch is permitted when bushing is finish machined.

g. Maintain a bearing center to bushing center distance of 13.7475 - 13.7525 on master rods and a bushing center to center distance of 10.8095 - 10.8145 on articulated rods.

NOTE

In the event that difficulty is encountered in obtaining proper surface finish in the bushing bores, a finish hone after boring operation may be utilized by leaving approximately 0.002 inch of stock for final sizing.

6-400. Final Inspect Master/Articulated Rod.

a. Inspect the finished machined rod bores for parallelism and vertical and horizontal alignment in accordance with paragraphs 6-88 and 6-97.

b. Lead in the bronze alloys used for the bushings has a tendency under certain conditions to segregate from the bronze. This lead may be smeared or strung out in the manufacturing process forming lines of a bright silver or in time a gray matte color. Lead stringers may appear either as longitudinal or circumferential indications and are acceptable within the following limits.

c. Disregard stringers that are less than 1/64 inch in length.

d. Maximum length of any stringer shall not exceed 3/8 inch in length or 0.010 inch in width.

NOTE

The total length (sum) of all stringers shall not exceed 1-1/2 inches in length and no stringer shall break over the edge of the bushing.

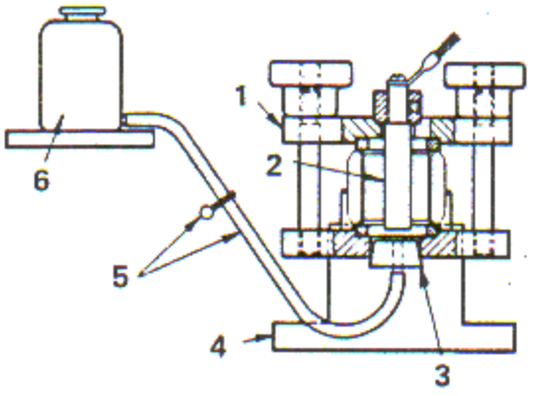

1. FIXTURE
2. ANODE
3. RUBBER PLUG
4. WOOD SUPPORT
5. RUBBER HOSE AND PINCH CLAMP
6. LEVELING BOTTLE ONE LITER CAPACITY

Figure 6-115. Lead-Tin Plating ID of Bushing

e. Minimum separation between parallel stringers shall be 1/8 inch.

f. Minimum separation between two in-line stringers shall be equal to the length of the shortest stringer.

NOTE

This limit is to be disregarded if the overall length of the two stringers is less than the maximum length permitted. In this case the two in-line stringers shall be considered as one stringer.

g. Porous bushings or bushings which are not satisfactory in accordance with the above limits should be replaced.

6-401. Lead-Tin Plate ID of Bushing.

a. Clamp knuckle pin end of the connecting rod in fixture (1, figure 6-115), resting the H section of the rod on a wooden support (4) as shown.

b. Insert anode (2). The lower end of the anode must extend 0.125 inch below the rod.

c. Release pinch clamp (5) and allow fluid to flow until bushing is completely covered. Pinch hose with the clamp.

d. After plating, release pinch clamp and lower bottle (6) until all the fluid is drained from the bushing.

NOTE

Refer to paragraph 6-862 for plating procedure. Plate to obtain a thickness of 0.0002 - 0.0004 inch.

e. Wash, inspect and slush in a suitable slushing oil immediately after plating.

6-402. MASTER ROD BEARING BORE, OVERSIZE HONING. (See tool group 88.)

a. Assemble the spacer (8, figure 6-116) to the fixture (7) with fixture screws (6).

b. Clamp the master rod securely on the spacer (8) using fixture nuts (11) and clamp ring (13). Centrally locate the master rod using locating plug (12) on the fixture guide.

NOTE

Ensure there is no binding at the side of plug.

c. Indicate the fixture guide at location A to run true with the honing machine spindle within 0.003 inch full indicator reading. Clamp the fixture to the machine table and remove the guide and the locating plug.

d. Assemble the hone body (3), the stone holder (4), and the stone and shell assembly (5) to the hone head (2) and brake (1), and attach to the machine spindle.

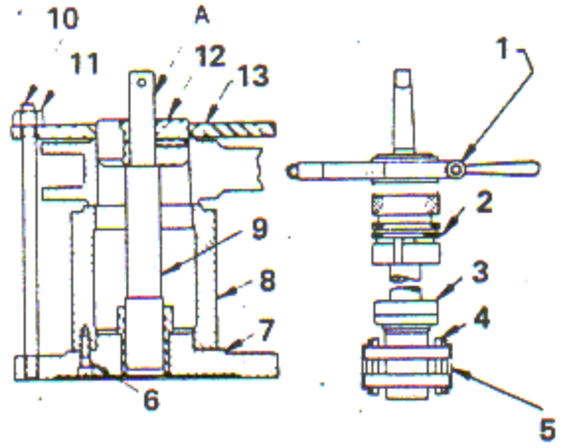

1. HONE BRAKE
2. HONE HEAD
3. HONE BODY
4. HOLDER
5. STONE AND SHELL
6. FIXTURE SCREWS
7. FIXTURE
8. SPACER
9. GUIDE
10. FIXTURE STUD
11. FIXTURE NUT
12. LOCATING PLUG
13. CLAMP RING

Figure 6-116. Honing Master Rod Bore for Oversize Bearing

e. Set the spindle for 170 rpm and 80 strokes a minute. Hone the master rod bore to obtain a finish of 20 microinches rms and the required diameter. For a 0.005 inch oversize bearing, hone to 3.477 - 3.478 inches diameter. For a 0.010 inch oversize bearing, hone to a diameter of 3.482 - 3.483 inches.

f. Restore the 0.073 - 0.083 inch radius at the forward end of the bore and break sharp edges at the aft end of the bore with 0.04 - 0.06 inch approximate radius. The finished bore shall be circular, parallel and straight within 0.0003 inch.

g. Select a new master rod bearing that will provide the fit required in reference 212, Table of Limits, Section IX.

6-403. MASTER ROD HUB OUTSIDE DIAMETER RECONDITIONING.

6-404. Outside Diameter Grinding (Prior to Plating).

a. Place heavy paper between the clamps (3, figure 6-117) and the master rod and clamp to the grinding machine faceplate (2, Springfield Vertical Universal Grinder, Model 3TR, the Springfield Machine Tool Co., Yellow Springs and Southern Aves., Springfield, Ohio, or equivalent).

b. Indicate A surfaces to run true within 0.001 inch full indicator reading. Clamp the rod securely.

NOTE

Use three clamps around the knuckle pin location and one clamp at the piston pin location.

c. Use a generous flow of coolant, specified in paragraph 6-197, a work speed of 250 rpm and a wheel speed of 3800 - 4000 rpm. Grind sufficient material from the outside diameter B to clean up wear marks, but, do not exceed the minimum dimension of 4.024 inches. Using grinding wheel, (Type 6, No. BA46-J8V9, Fuller Merriam Co., West Haven, Conn., or equivalent) grind to blend radius C as shown to 0.140 - 0.180 inch.

NOTE

Grind only the locking plate side of the rod at this time.

d. Restore the 0.040 - 0.060 inch hub end radius D. Obtain a surface finish of 32 microinches rms or better on the hub OD as shown.

e. Magnetic particle inspect the rod. Refer to paragraph 6-26.

6-405. Chrome Plate Hub Diameter (Locking Plate Side). Measure the OD of the reground hub to determine the amount of chrome plate required to restore the hub to the standard size of 4.044 - 4.045 inches. Add 0.010 inch to the figure obtained for machining purposes. Chrome plate the hub. Refer to paragraph 6-865 for chrome plating procedure.

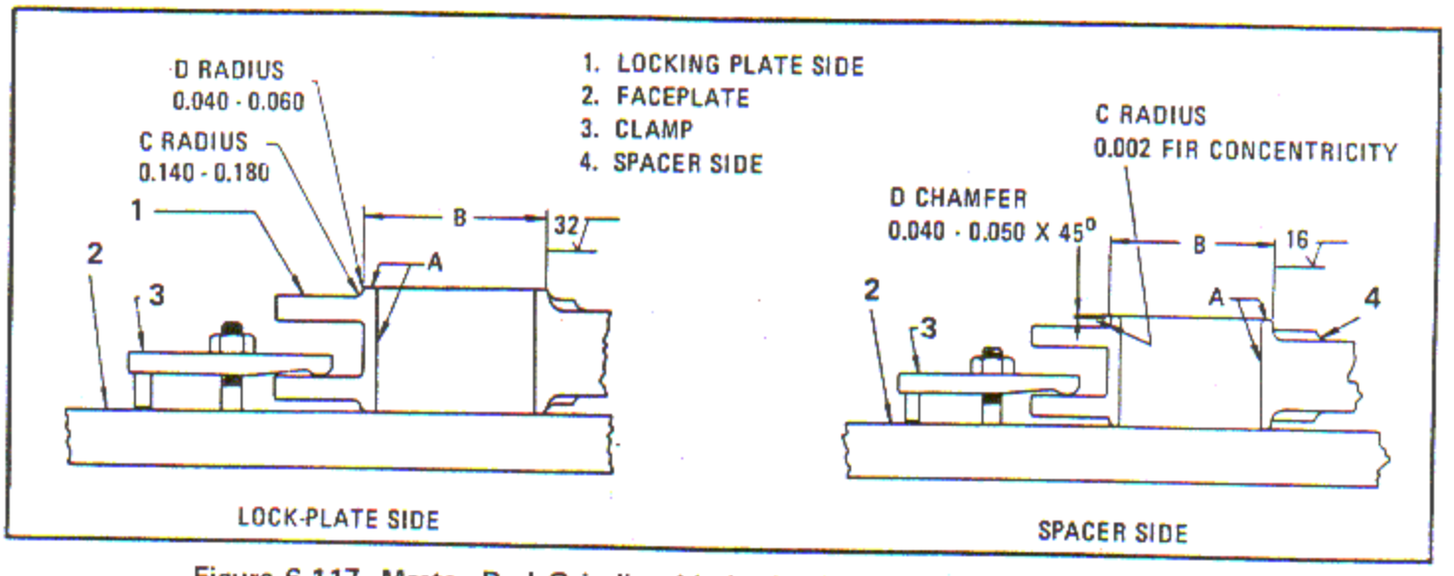

Figure 6-117. Master Rod Grinding Limits Locking Plate Side and Spacer Side

6-406. Grind Hub Diameter to Finish Size (Locking Plate Side).

a. Using the procedure specified in paragraph 6-404, grind the outside diameter B to 4.044 - 4.045 inches. Blend radius C to 0.140 - 0.180 inch as shown. Concentricity of diameter B must be within 0.002 inch FIR of inside diameter. See figure 6-117.

NOTE

Chrome plate thickness is not to exceed 0.010 inch after finish grinding.

b. Restore the hub end radius to 0.040 - 0.060 inch.

NOTE

Obtain a surface finish of 32 microinches rms or better on the hub OD.

6-407. Grind Hub Diameter (Spacer Side). Master rod hubs shall be reground on the spacer side to eliminate the wear step and to accommodate the ID of undersize master rod spacers as follows:

a. Follow the procedures specified in paragraph 6-404. See figures 6-117 and 6-118.

b. Clamp the master rod to the faceplate.

NOTE

Ensure that the spacer side is facing up.

c. Indicate the hub as specified and clamp the rod tightly in position.

d. Grind the hub O.D., removing the minimum amount of material necessary to eliminate the wear step for the length and radius indicated on figure 6-118. Blend diameter B with radius C and restore the 0.040 - 0.050 inch x 45 degree corner chamfer D if necessary. Obtain a surface finish of 16 microinches rms or better on the ground surface.

e. Magnetic particle inspect the master rod as instructed in paragraph 6-26.

6-408. MASTER ROD ANTI-PROPELLER (SPACER) HUB JOURNAL AND END FACE RECONDITIONING.

6-408A. Inspect the anti-propeller (spacer) end of the master rod for scoring and surface irregularities. In the event scoring or surface irregularities are encountered, clean up any unsatisfactory surface condition in accordance with the following paragraph.

6-409. Reconditioning. Recondition the affected master rods by grinding up to 0.010 inch of stock from the hub face in accordance with figure 6-118. Machine the dimensional limits as shown. A surface finish of six microinches rms, or better, is required.

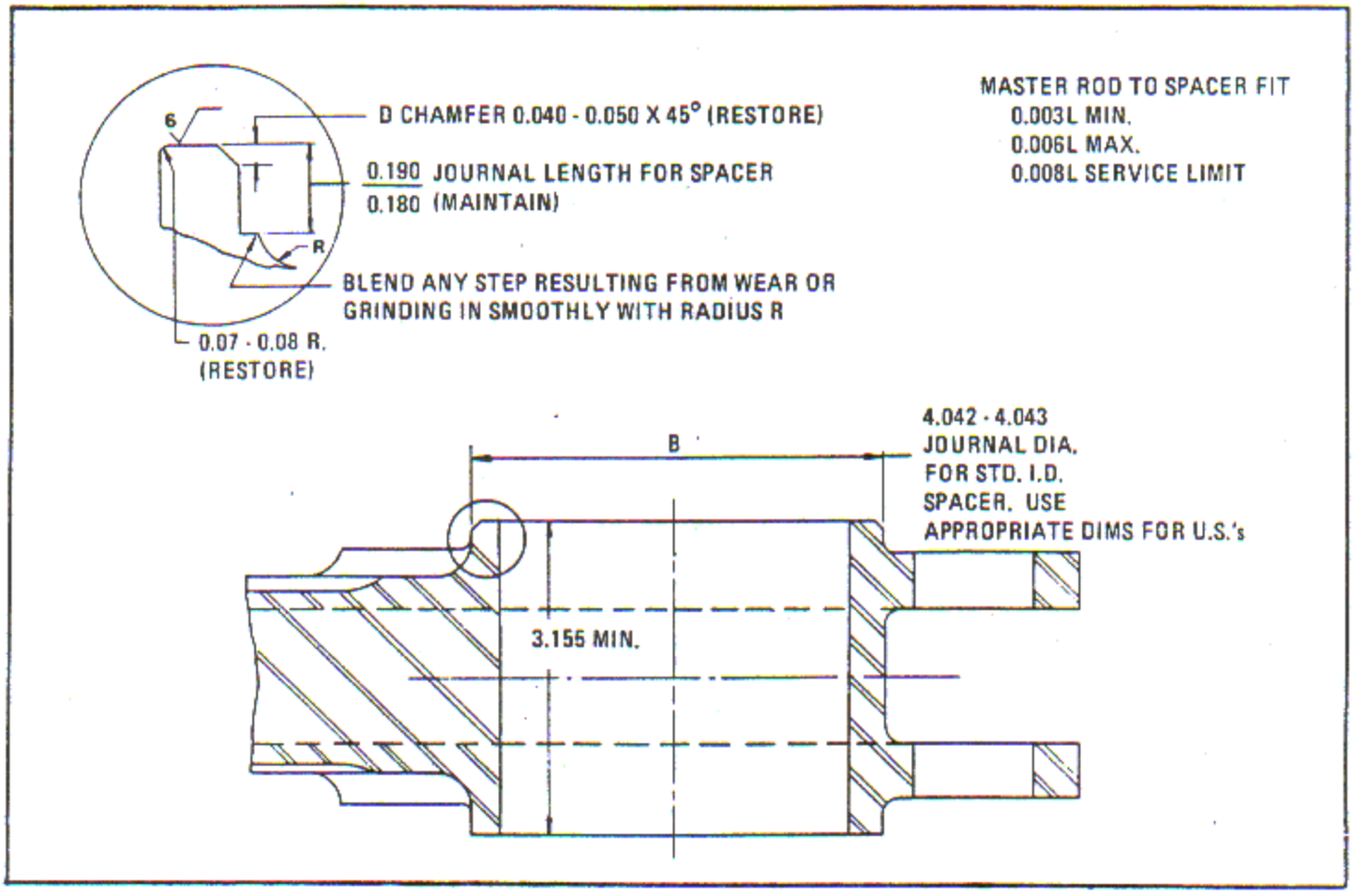

Figure 6-118. Grinding Master Rod Hub Journal and End Face

6-410. MASTER ROD OIL SEAL DISC, REWORK (R1820-76C, -76D, -80A, -80B, -86A, -86B).

6-410A. Master rod oil seal discs that have excessive wear on the silver plated outside diameter may be required as outlined in the following instructions.

a. Strip the lead-tin plate from the disc as outlined in paragraph 6-863.

b. Use a scrap 147848 or 148393 knuckle pin locking plate or equivalent, for mounting the disc during all machining operations in order to provide support at the disc slots.

c. Mount the disc in a suitable lathe or grinder. Indicate the 4.519 - 4.523 inch diameter to run true within 0.001 inch full indicator reading. See figure 6-119.

d. Machine diameter H as required to clean and true up the worn surface. Reject disc if machining below 4.618 inches is required.

e. Mask off all areas except the surface being reconditioned, and silver plate this surface over the old silver plate in accordance with paragraph 6-857, as required to obtain a finish diameter of 4.6387 - 4.6398, 4.6437 - 4.6448 or 4.6487 - 4.6498 inches as applicable after machining.

f. Indicate the 4.519 - 4.523 inches diameter to run true within 0.001 inch full indicator reading and machine the plated surface to the required diameter. Chamfer the edges as shown.

g. Lead-tin plate all over 0.0004 - 0.0006 inch thick in accordance with paragraph 6-864.

h. After lead-tin plating, confirm that over plating diametrical dimensions shown are maintained.

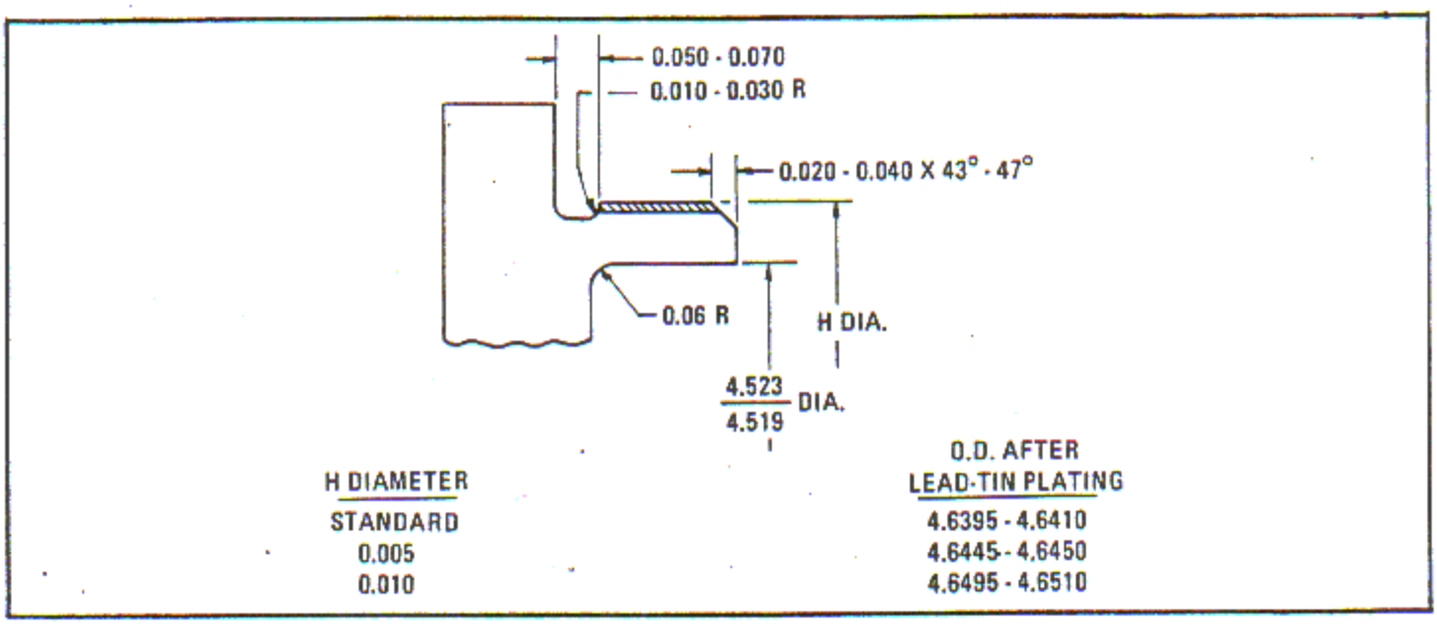

Figure 6-119. Master Rod Oil Seal Disc Reconditioning

6-411. PISTON PIN INSIDE DIAMETER RECONDITIONING.

6-411A. If the piston pin is tapered more than 0.0005 inch at the piston pin plug location, the ID may be honed or ground as necessary to remove the taper.

a. Remove only the minimum amount of material necessary to correct the defect. Reject pins that require enlargements to a diameter in excess of 0.992 inch. A surface finish of 32 microinches rms or better is required.

6-412. CYLINDER HOLD-DOWN FLANGE RECONDITIONING.

6-413. RADIAL CRACKS IN BOTTOM OF FLANGE.

a. Magnetic particle inspect the bottom surface of cylinder hold-down flanges for cracks which start at cap screw holes and radiate outward toward, or to, the flange OD.

b. Eliminate cracks anywhere within the shaded areas A or B of figure 6-120, by cutting one narrow round bottom groove within the following limits.

c. The groove width shall be as narrow as possible, with a maximum width of 0.100 inch, as shown in view A of figure 6-121.

d. The groove depth will not exceed 0.060 inch as shown in view B.

e. All edges are to be broken 0.020 - 0.040 inch approximate radius.

f. Magnetic particle inspect all reworked cylinders to ensure such cracks have been completely eliminated.

NOTE

No more than one such repair is permissible on any one cylinder. These instructions do not apply to cracks starting in any other location on the flange or cracks that progress in any other direction. There is no restriction as to the number of such repaired cylinders on one engine.

6-414. CYLINDER HOLD-DOWN FLANGE FACE LAPPING. (See tool group 33.)

a. Lap or grind the cylinder flange face, if required.

b. The following equipment, available from the Crane Packing Company, Lapmaster Division, 6403 Oakton St., Morton Grove, Illinois, is required to lap the cylinder barrel flange; however, equivalent equipment may be utilized.

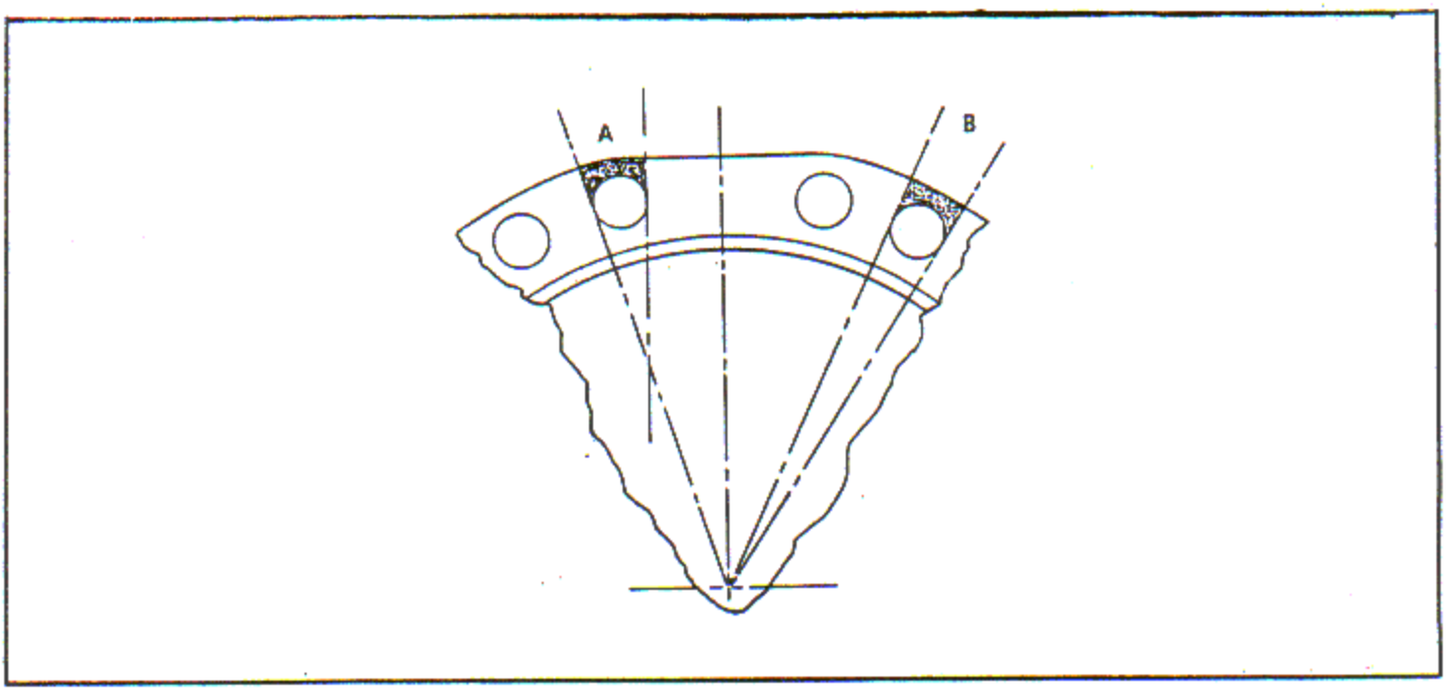

Figure 6-120. Crack Inspection Area

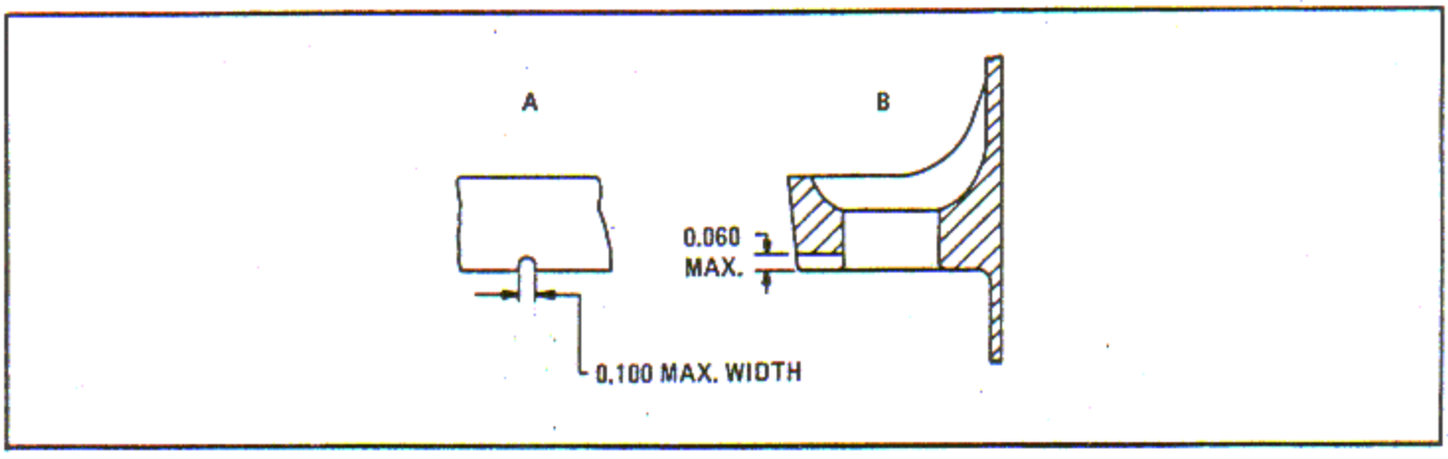

Figure 6-121. Cylinder Flange Reconditioning Limits

Lapmaster Machine, 24 inch, Drawing No. D-24-79
Drive Shaft, Drawing No. D-24-80
Drive Gear, Drawing No. D-24-81
Ring Gear, Drawing No. D-24-82, two required
Retaining Arms, Drawing No. D-24-83, two required
Spacers, Drawing No. D-24-84, four required
Springs, Drawing No. D-24-85, two required
Riser Blocks, Drawing No. D-24-86, two required
Lapping Plate Rings, twin surface reversible for 6-9/32 inches outside diameter of cylinder flange, Drawing No. D-24-87, two required
Cap Screws, socket head 5/16 - 18 x 3-1/2 inches long, standard, six required
Set Screw, cup point socket 5/16 - 18 x 1/2 inch long
Set Screws, cup point socket 3/16 - 32 x 1/2 inch long, eight required
Lapping Compound, No. 2400 (silicon carbide)
Carrier Vehicle No. 3

6-415. Preparation of Lapping Machine.

a. Remove all standard conditioning rings from the 24 inch Lapmaster machine.

b. Thoroughly clean the machine and its parts and assemble all D-24 component tools as required.

c. Pour a mixture of Crane lapping compound No. 2400 and carrier vehicle No. 3 into the agitator tank of the machine. The mixture should be 6 ounces of lapping compound to a gallon of carrier vehicle No. 3. Turn the agitator switch to ON position and allow the agitator to run for 5 minutes to thoroughly mix the lapping compound and the carrier vehicle.

d. Turn the lapping plate switch and the compound valve to the ON position. Set the timer for 5 minutes and allow the compound to flow down the feed wire to the lapping plate to form an even distribution without a workload. Turn the switch OFF when the compound is evenly distributed.

e. Place a smooth even coating of lapping compound No. 2400 over the lapping surfaces of the reversible lapping plate rings.

6-416. Lap Cylinder Hold-Down Flange.

a. Thoroughly clean the cylinder flange and skirt. Measure and record the flange thickness and the skirt length.

b. Place the cylinder in position on the special lapping plate. Attach one of the machine retaining arms to one cap screw hole in the cylinder flange. The machine is capable of lapping the flanges of two cylinders at the same time.

NOTE

It will be necessary for the operator to determine the exact amount of time necessary to lap the cylinder flanges. As a start the timer should be set for 10 minutes.

c. Turn the lapping plate switch and the compound feed valve to ON and allow the cylinders to lap until the machine shuts off.

d. Remove the cylinder from the lapping plate, clean the flange and inspect to determine if further lapping is required.

NOTE

A maximum of 0.010 inch may be removed from the flange face. Reconditioned surfaces should run square to the barrel bore within 0.002 inch full indicator reading and be flat within 0.002 inch. A 50 microinch rms surface finish is required on the lapped surface.

e. If further lapping is required, invert the flange lapping plate to permit truing up of the used side. Place the cylinder back on the lapping plates. Attach the retaining arm and set the timer as required to complete the lapping operation.

NOTE

If more than 10 minutes are required, invert the lapping plates at 10 minute intervals to maintain a flat lapping surface.

f. When finished lapping, measure the flange thickness and subtract it from the measurement recorded in step a above. Die-stamp the difference

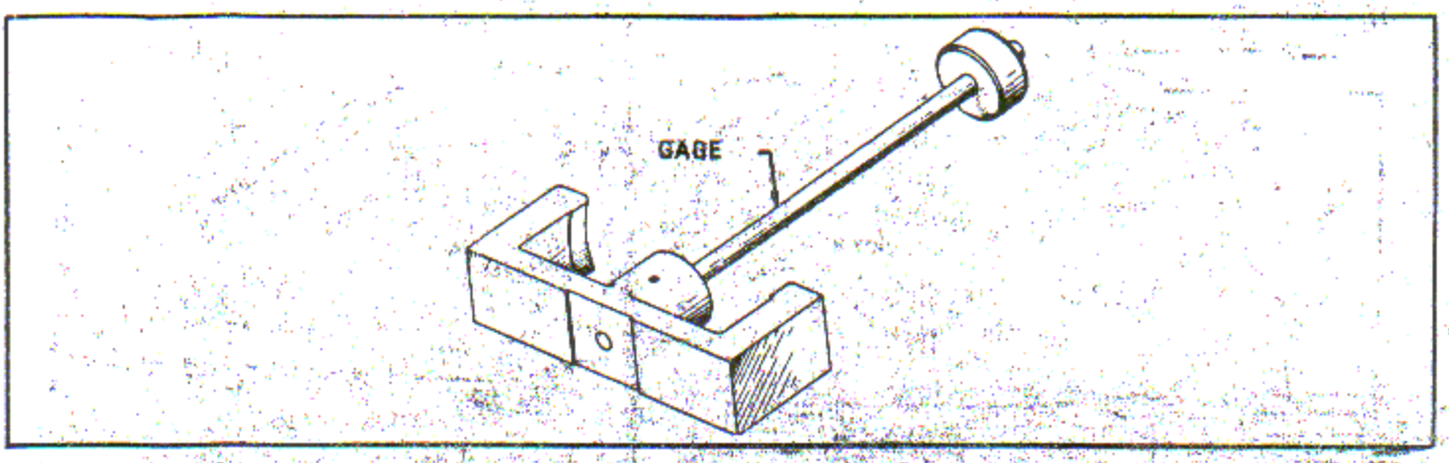

Figure 6-122. Cylinder Barrel Flange to Dome Flush Pin Gage

(the amount of material removed) on the barrel flange adjacent to the cylinder part number.

g. Restore the correct radius between the flange and skirt (0.060 ± 0.010 inch) and restore the 0.010 - 0.030 inch radius breakedge at the flange OD and at the hold-down screw holes.

h. Check the flange to dome dimension with flush pin gage. See figure 6-122.

i. To ensure that a 0.030 inch clearance will exist between the cylinder barrel, skirt and counterweight, it may be necessary to lap material from the end face of the skirt. Measure the distance from the cylinder flange face to the end of the skirt. If 2.225 inches or less, no further rework is required. If over 2.225 inches, lap to obtain a flange to skirt distance of 2.215 to 2.225 inches.

j. The lapping can be done on any standard general purpose lapping table. Use a figure eight hand controlled action.

k. If required after lapping, restore the 30 degree chamfer at the skirt ID to 6.146 to 6.166 inches diameter. Blend all sharp edges to approximately 0.020 inch radius.

l. Degrease and wash the cylinder to remove all traces of lapping compound and foreign matter.

6-417. CYLINDER BORE RECONDITIONING. (See tool group 33.)

6-417A. Study each cylinder bore and determine the amount of reconditioning necessary to obtain a satisfactory bore surface. Hone any bore with excessive corrosive pitting, out-of-round, blended score marks, or definite ring steps. Lap all cylinder bores. Remove the minimum amount of material necessary to obtain a surface suitable for the optimum piston ring performance. Do not exceed a maximum diameter of 6.136 inches in the straight portion of the bore. Bores must be round within 0.005 inch, and the choke must be at least 0.005, measured 0.250 inch from the top of the barrel. See figure 6-123.

NOTE

In lieu of the lapping operation currently used to provide the final surface finish of cylinder barrel bores, a final honing operation shall be used. The surface finish and pattern required from the honing operation shall be the same as that currently required of the lapping operation.

6-418. Hone and Lap Cylinder Bore.

a. Using honing fixture, hone driver and hone assembly, group 33, hone the cylinder bore to a maximum surface finish of 10 microinches rms with a criss-cross pattern of 75 - 130 degrees included vertical angle. See figures 2-10 and 6-123.

NOTE

This surface finish applies after brush cleaning of the cylinder bore.

b. Lap all cylinder bores after honing, using lapping head, with 12 P/N 68498 rings reworked as shown in figure 6-124. Use a suitable lapping

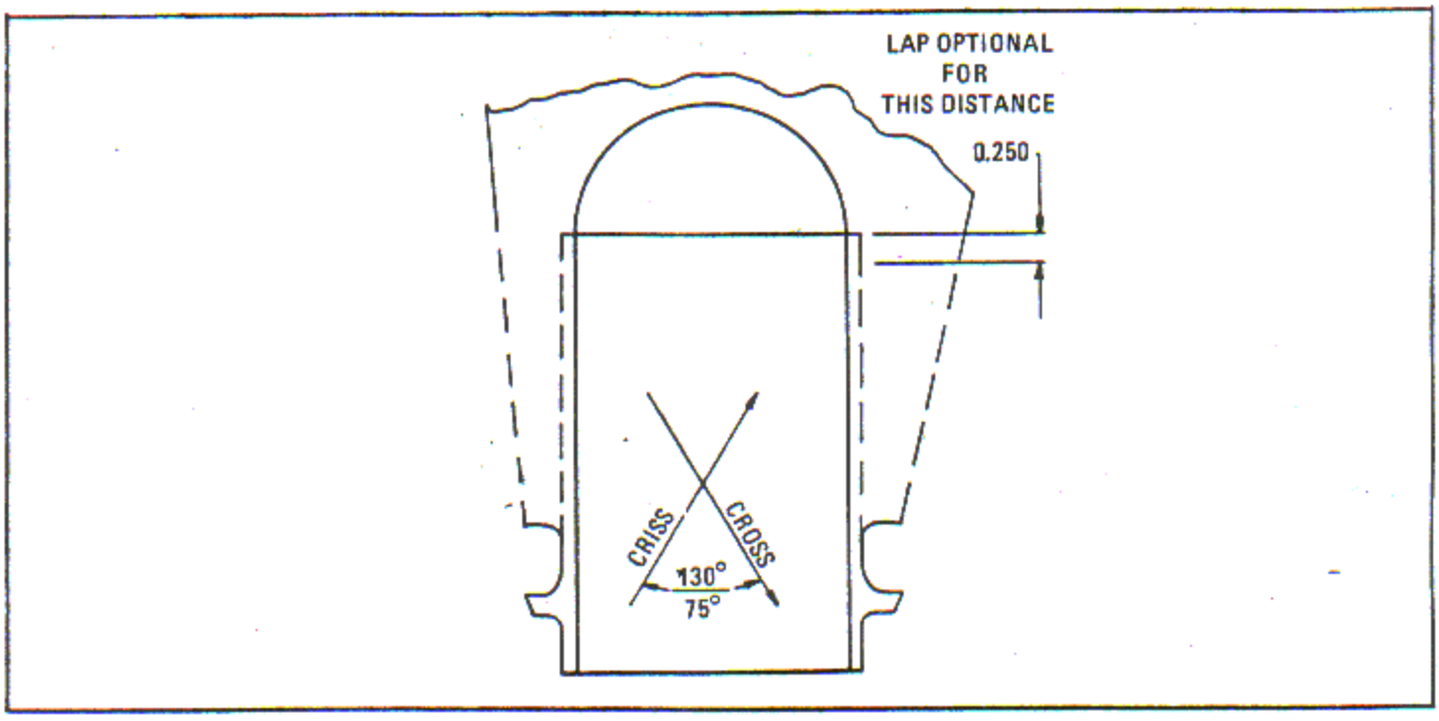

Figure 6-123. Cylinder Bore Honing and Lapping Pattern

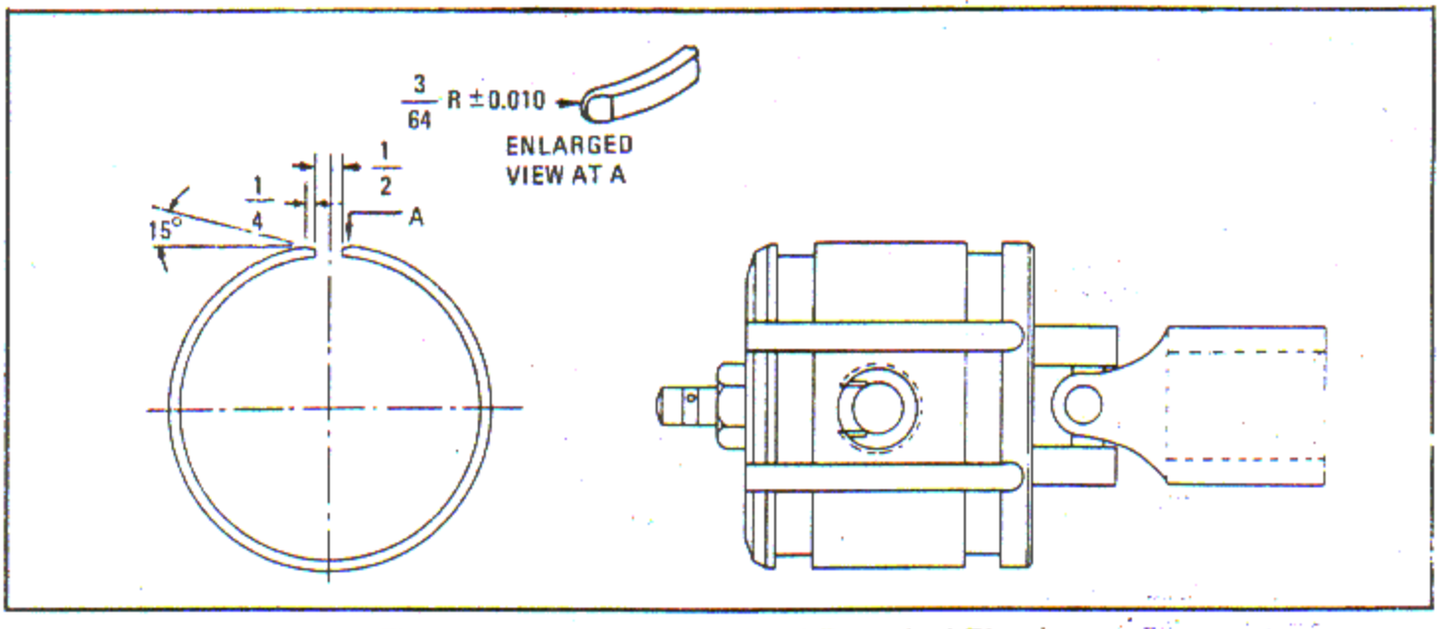

Figure 6-124. Lapping Head and Reworked Rings

machine (Model PRL, Barnes Drill Co., 814 Chestnut St., Rockford, Ill., or equivalent), which will give the required criss-cross pattern by rotating the lapping head at approximately 54 rpm using a stroke rate of approximately 75 cycles per minute.

CAUTION

Do not use aluminum oxide abrasive compound.

c. Apply silicon carbide abrasive lapping compound (Grade B, 240 grit, or Grade E, 120 grit, Clover Manufacturing Co., Norwalk, Conn., or equivalent) in the cylinder bore with a suitable brush.

d. Install the cylinder on the lapping machine. Depending upon the machine and condition of the barrel, lap the barrel between 25 and 40 cycles to obtain the required surface finish of 12 - 20 microinches rms and criss-cross pattern of 75 - 130 degrees included vertical angle. Reapplication of lapping compound may be necessary after 20 strokes to obtain a uniform surface finish.

NOTE

While a surface finish of 12 - 20 microinches rms is specified, a finish of 14 - 20 microinches rms is desired for cylinders to be used with chrome plated compression rings. This finish applies after brush cleaning the barrel.

e. The need for replacing the lapping rings is determined by the overall finish obtained and the number of strokes required to obtain it. Lapping of the top 0.250 inch of the cylinder barrel is optional.

6-419. Lap Cylinder Bore.

CAUTION

Do not use aluminum oxide abrasive compound.

a. Use the same equipment as described in paragraph 6-418, step b. Charge the cylinder bore with silicon carbide abrasive lapping compound (Grade E, 120 grit, Clover Manufacturing Co., Norwalk, Conn., or equivalent) with a suitable brush.

NOTE

This instruction applies only if the bore does not require honing.

b. Install the cylinder on the lapping machine. Depending upon the machine and the condition of the barrel, lap the barrel a minimum of 100 cycles to obtain the required surface finish of 12 - 20 microinches rms and criss-cross pattern of 75 - 130 degrees included vertical angle. Reapplication of lapping compound may be necessary during the last 25 cycles to obtain a uniform surface finish.

NOTE

While a surface finish of 12 - 20 microinches rms is specified, a finish of 14 - 20 microinches rms is desired for cylinders to be used with chrome plated compression rings. This finish applies after brush cleaning the barrel.

c. The need for replacing the lapping rings is determined by the overall finish obtained and the number of strokes required to obtain it. Lapping of the top 0.250 inch of the cylinder barrel is optional.

6-420. Cylinder Bore Cleaning. (See tool group 36.)

NOTE

After finish honing, cylinders shall be brush cleaned followed by steam cleaning to remove all abrasive materials.

a. After lapping, wash the cylinders using semi-automatic cylinder washing machine with machine brush and pallet to provide consistent and complete cleaning of the cylinder bore.

b. Make periodic checks on the efficiency of the cylinder barrel cleaning procedures and equipment in accordance with paragraph 6-107.

6-421. CYLINDER HEAD OR CYLINDER BARREL REPLACEMENT (TIMED).

6-421A. When reconditioning cylinder assemblies it is recommended that the valve guides, valve seats, rocker arm shaft bushings and intake and exhaust

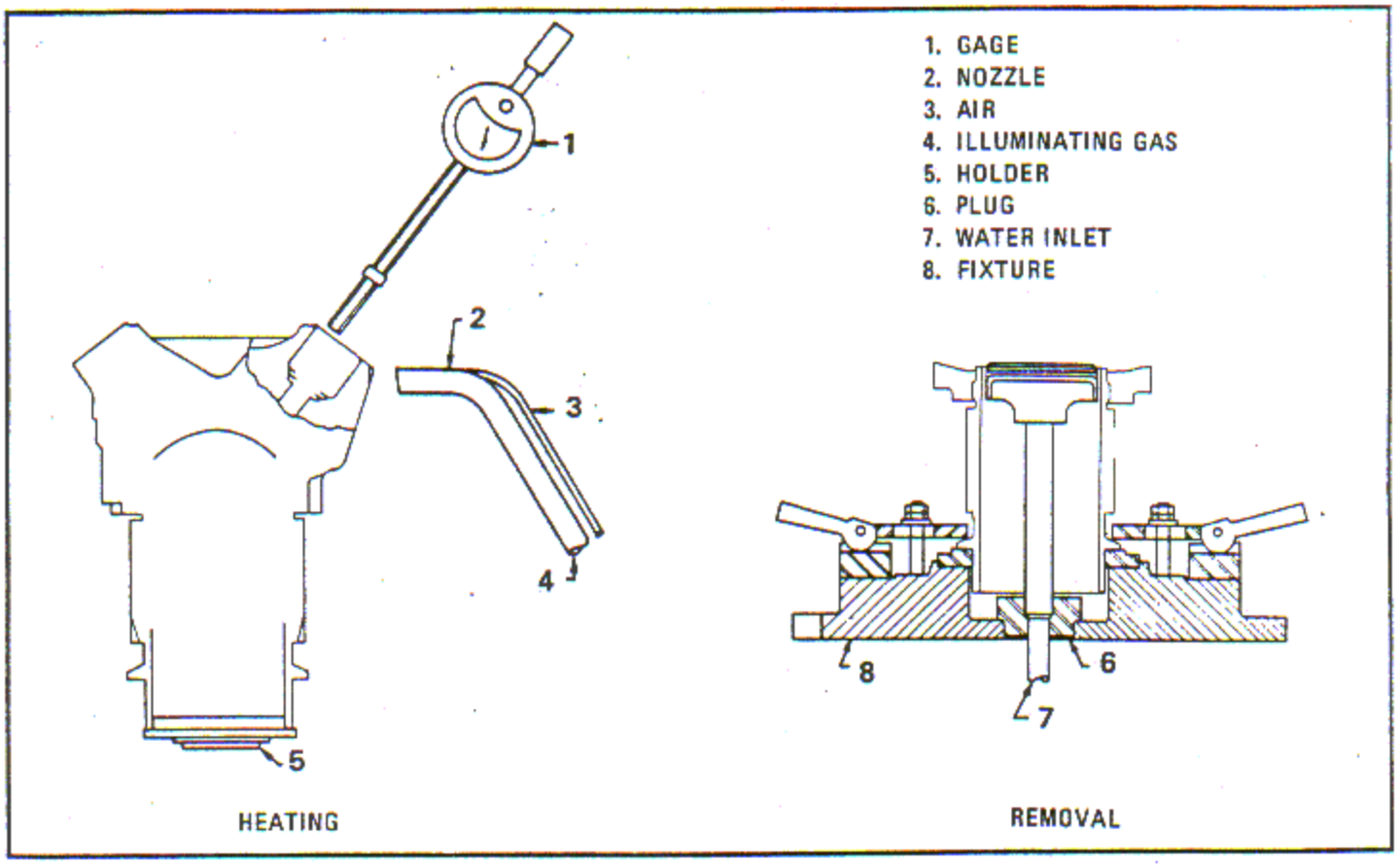

Figure 6-125. Cylinder Head Heating and Removal

connectors or sleeves be replaced in accordance with applicable instructions.

a. Degrease the cylinder assemblies in a suitable degreasing tank using a copious flow of degreasing fluid.

b. Allow cylinder to drain, then blow dry with air blast.

6-422. CYLINDER DISASSEMBLY.

a. Place cylinder assembly on holder (5, figure 6-125) locating on the cylinder skirt diameter and against the flange face.

b. Using nozzle (2), heat the cylinder head assembly by applying the flame through the exhaust port and to the cylinder dome and surrounding area. Move the nozzle at frequent intervals to prevent overheating and subsequent damage.

c. Maintain a temperature of 316°C (600°F) for several minutes to equalize the temperature around the cylinder head and threaded area. Check the cylinder head temperature at frequent intervals using a pyrometer gage and thermocouple (Cat. No. 1645-8, Alnor Pyro Point plus No. 1310 thermocouple, Illinois Testing Laboratories, Chicago, Illinois, or equivalent).

NOTE

A suitable oven incorporating temperature control may also be used for heating the cylinder.

d. Remove nozzle (2) from head and quickly transfer the cylinder assembly to water cooling fixture (8). Locate the cylinder on the skirt diameter and against the flange face. Clamp in position.

e. Apply water through the cylinder plug of water cooling fixture and to the ID of the cylinder barrel, for approximately 10 seconds.

f. Using a counterclockwise motion, unscrew the cylinder head from the barrel.

NOTE

If the cylinder head cannot be removed, repeat the removal procedures.

6-423. RECONDITIONING CYLINDER HEADS AND BARRELS. Degrease all cylinder heads and barrels. Inspect each to determine which are suitable for reuse. Discard all unsuitable parts. Refer to paragraphs 6-103 and 6-108.

a. Soft grit blast the cylinder heads to remove carbon deposits and baked-on varnish deposits. Refer to paragraph 5-31. If necessary, a five inch diameter Tampico brush (Cat. No. 5305, 3/8 inch arbor hole, Hanson Van Winkle-Munning Co., 100 Church St., Matawan, N.J., or equivalent) driven by a suitable air gun (Model No. 7319, Type 22BF, ARO Equipment Corp., Bryan, Ohio) may be used.

b. Cylinder barrels found to have excess carbon deposits may be soaked in a carbon remover solution for approximately one hour and Tampico brushed internally and externally to remove the carbon. Refer to paragraph 5-19 for carbon removing procedures.

c. Rewash cylinder head and barrel to remove foreign substances.

d. Reinspect the cylinder barrel, thread and pilot diameters and magnetic particle inspect cylinder barrels for heat checks, cracks or inclusions. Demagnetize and rewash after inspection.

e. Reinspect cylinder head thread and pilot diameters. Measure the pilot diameter using a suitable ID micrometer to ensure it is not in excess of 6.343 inches maximum blueprint diameter.

NOTE

Pilot diameters in excess of 6.343 inches may not provide the proper cylinder barrel choke when assembled.

f. New replacement cylinder barrels and fin assembly dimensions are shown in the following list and are to be used when cylinder head pilot diameters are found to be oversize. Barrels are provided in standard and oversize thread and pilot diameters.

Designation	OS (Inch)	Maximum Shot Peened Pilot Diameter (Inches)	Maximum Shot Peened Thread PD (Inches)
Standard	Std	6.365	6.623
Y1	+0.003	6.368	6.626
Y2	+0.005	6.370	6.628

g. The following list provides the cylinder head dimensions and is given for reference only.

Designation	Head Pilot Diameter (Inches)	Thread Pitch Diameter (Inches)
Standard	6.343 - 6.341	6.604 - 6.602

h. New cylinder barrels may be assembled in the same manner as specified for the assembly of used barrels. This configuration will provide a tighter fit.

i. When new barrels are used, silastic fin braces must be installed after assembly of the barrel to the cylinder head.

NOTE

In the event a new cylinder barrel is installed comply with the provisions of paragraph 6-427, steps f and g. Steps a and e, however, may be accomplished if desired. If an old cylinder barrel is installed comply with paragraph 6-427 in its entirety.

6-424. CYLINDER HEAD INSPECTION (NON-TIMED THREAD). (See tool group 33.)

6-424A. A new timed thread cylinder barrel may be assembled to a non-timed cylinder head provided the cylinder head threads are within the limits established in this paragraph and the cylinder head is satisfactory for reuse. Proceed as follows.

a. Place the non-timed thread cylinder head on a locally fabricated work bench holding block (3, figure 6-126) with the threaded side up. Insert thread timing gage into the cylinder head with the gage threads fully contracted and using proper gage blocks (2).

b. With the gage target arm 90 - 180 degrees past the cylinder head target slot, expand the gage threads into the cylinder head threads.

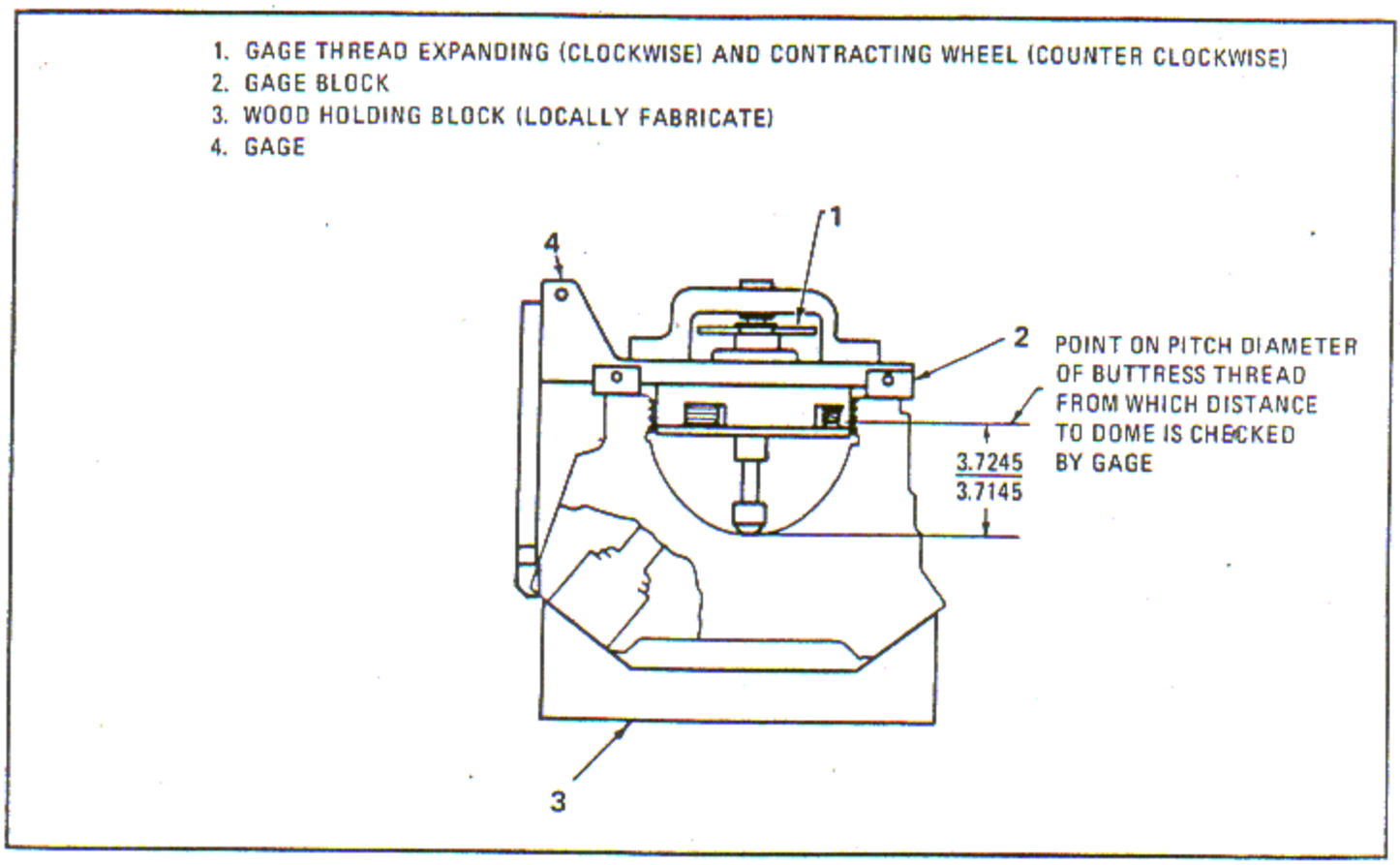

Figure 6-126. Cylinder Head Inspection

c. Rotate the thread gage counterclockwise and set the gage targeting arm into the cylinder head targeting arm into the cylinder head targeting slot in the rocker box side. Complete expanding the gage threads in the cylinder head threads and tighten snugly in position. See figure 6-126.

d. Check the 3.7245 - 3.7145 inch thread gage point to dome dimension using the gage flush pin. If the dimension is satisfactory, the cylinder head may be used for assembly with a new timed thread cylinder barrel.

e. Fully contract the gage threads counterclockwise before removing the gage from the cylinder head.

6-425. CYLINDER HEAD GAGE INSPECTION. The master gage body and the cylinder thread timing gage and details should be inspected periodically for accuracy.

a. When checking the master gage body, figure 6-127, the top of the master gage center pin and master gage plug (2) must be flush within 0.0002 inch as checked by the master gage dial indicator (1) when the master gage locator (5) contacts rear side of master gage locator stop block (4).

b. Remove gage block (4) and locator (5) on bottom of leaf (12) from the thread timing gage (8). Replace the locator with stop plate (10). Screw threaded timing gage (8) into the master gage body (11) until bottom of thread timing gage flush pin (7) contacts master gage bottom and the flush pin stays within its limits. The thread timing gage stop plate must contact rear side of the master gage locator stop block.

6-426. CYLINDER HEAD AND BARREL REASSEMBLY.

a. Attach protectors (3, figure 6-128) to the cylinder head using the engine rocker box cover nuts.

b. Heat the cylinder as previously outlined in paragraph 6-422, checking the indicated temperature at frequent intervals.

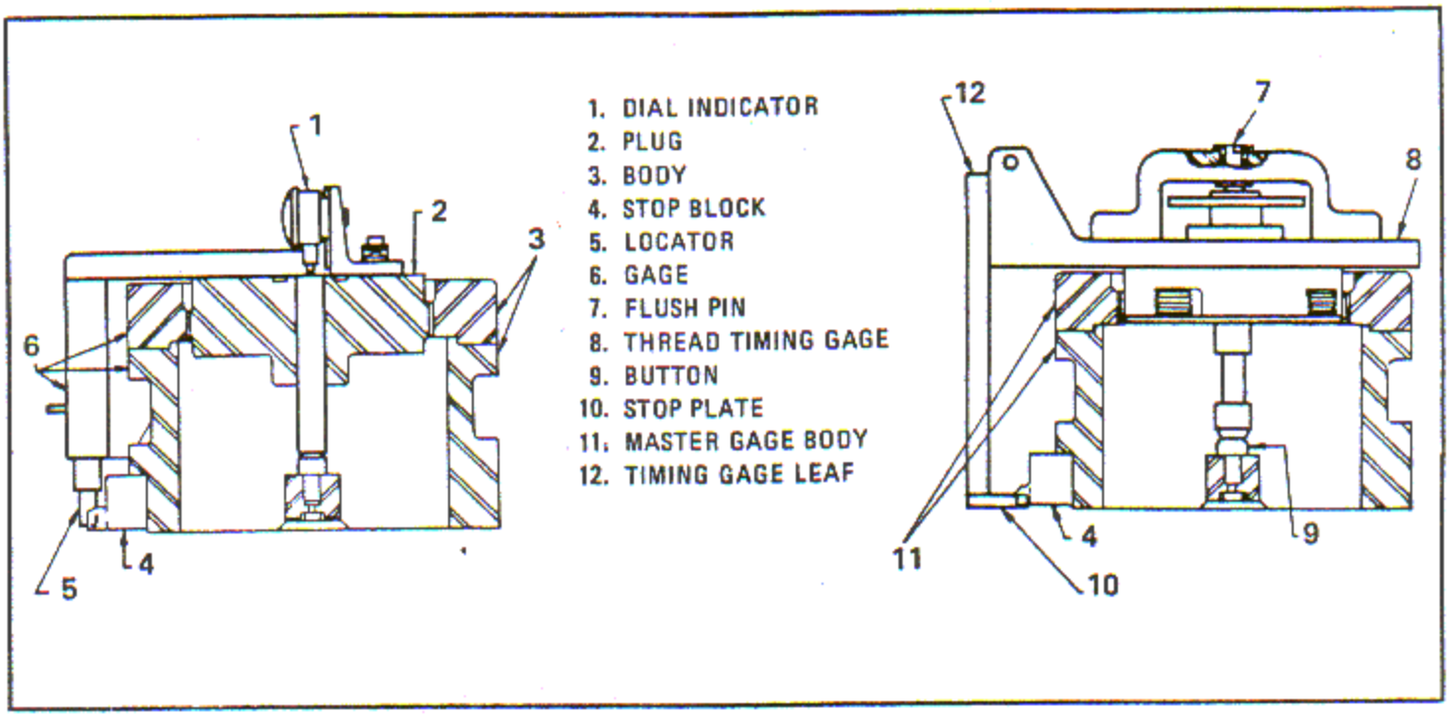

Figure 6-127. Checking Master Gage Body and Cylinder Thread Timing Gage

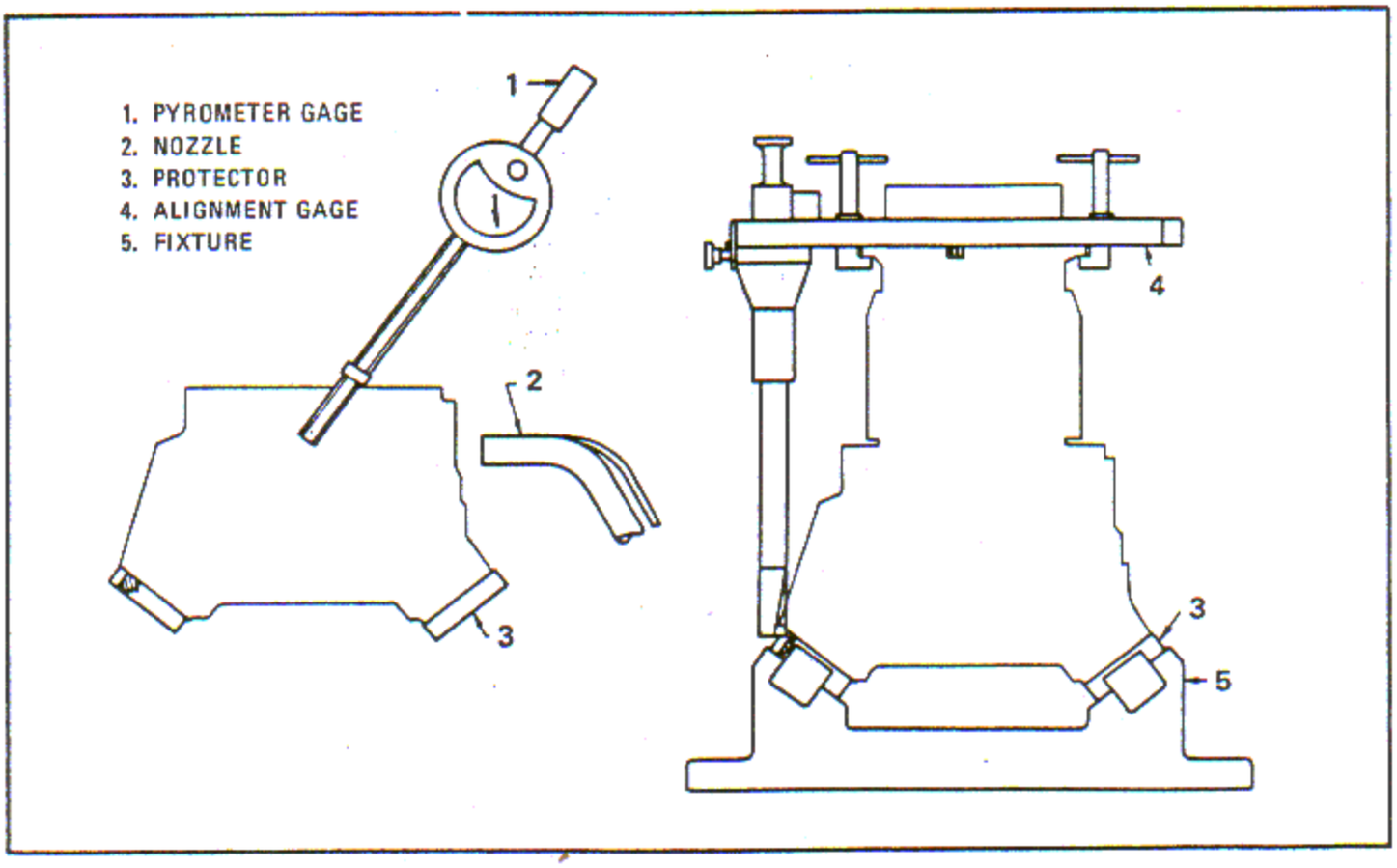

Figure 6-128. Assembling Cylinder Head and Barrel

CAUTION

Do not apply compound within an area one-half inch from the pilot end.

c. While the cylinder heads are being heated, prepare several cylinder barrel and fin assemblies by applying a liberal coating of No-Lok (Goger, Inc., 144 Cuyahoga St., P.O. Box 991, Akron, Ohio) or Sauereisen 66 cement (Sauereisen Cement Co., 3389 Sharpsburg Station, Pittsburg, Pa.) to the threads and pilot diameters.

d. Assemble the target aligning gage (4, figure 6-128) to the cylinder barrel. Match the stamped S mark on the gage with stamped S mark on the barrel. Locate the three gage pins in the capscrew holes and clamp in position as shown.

e. Place the cylinder barrel assembly, with the assembled alignment gage (4), into a suitable pan approximately 10 x 10 x 3 inches containing a sufficient quantity of dry ice and alcohol to cover the threads. Allow cylinder barrel to chill while cylinder head is being heated.

f. Place the heated cylinder head into holding fixture (5), as shown, with the rocker boxes down and the intake and exhaust ports facing away from the operator.

g. Remove the cylinder barrel, with the gage (1) attached, from the alcohol and dry ice. Place the barrel in position over the cylinder head with the stamped S marks away from the operator and with the gage targeting arm to the right of the operator.

h. Using a clockwise motion, screw the barrel and fin assembly into the cylinder head for 5.5 or 7.5 turns, as applicable, ending with the gage target arm to the left of the operator. Set the alignment bar down into the targeting slot at the side of the cylinder head rocker box as shown.

NOTE

The turns required to seat the barrel in the head, 5.5 or 7.5, is dependent upon the number of threads incorporated in the cylinder head. Cylinder heads incorporating 8 threads require 7.5 turns; 6 threads require 5.5 turns to the targeting position.

i. Allow the complete assembly to cool sufficiently to allow the cylinder head and barrel to seize in the aligned position. Remove the alignment gage.

j. Reassemble the cylinder components in accordance with the procedures contained in this manual.

6-427. INSPECT, POLISH, LAP AND PRESSURE TEST CYLINDER ASSEMBLIES. (See tool group 33.)

NOTE

In the event a new cylinder barrel is installed comply with provisions of steps f. and g. below. Steps a. and e. may be accomplished if desired.

a. Check the dimension from the cylinder flange face to the dome. Use flush pin gage. See figure 6-129.

NOTE

Ensure cylinder assembly has cooled to room temperature before taking dimensional measurements.

b. Inspect all spherical radii on the cylinder barrel flange. Remove score marks by polishing. Use a short pneumatic grinder (Model No. 7179, Type 22-BGS, ARO Equipment Corp., Bryan, Ohio, or equivalent) incorporating a locally fabricated 3/16 inch diameter spindle to hold a 1 x 3/16 inch disc having six slots and a grit size No. 240J (Three-M-Ite Cloth Discs, Minnesota Mining and Manufacturing Co., St. Paul, Minnesota, or equivalent).

c. Lap the cylinder hold-down flange face. Refer to paragraph 6-414.

d. Thoroughly wash the cylinder assembly to remove all traces of lapping compounds or foreign substances. Refer to paragraph 6-415.

e. Inspect the cylinder barrel choke limits. Refer to paragraph 6-104.

f. Using suitable equipment, perform hydraulic pressure leakage tests on all completed cylinder

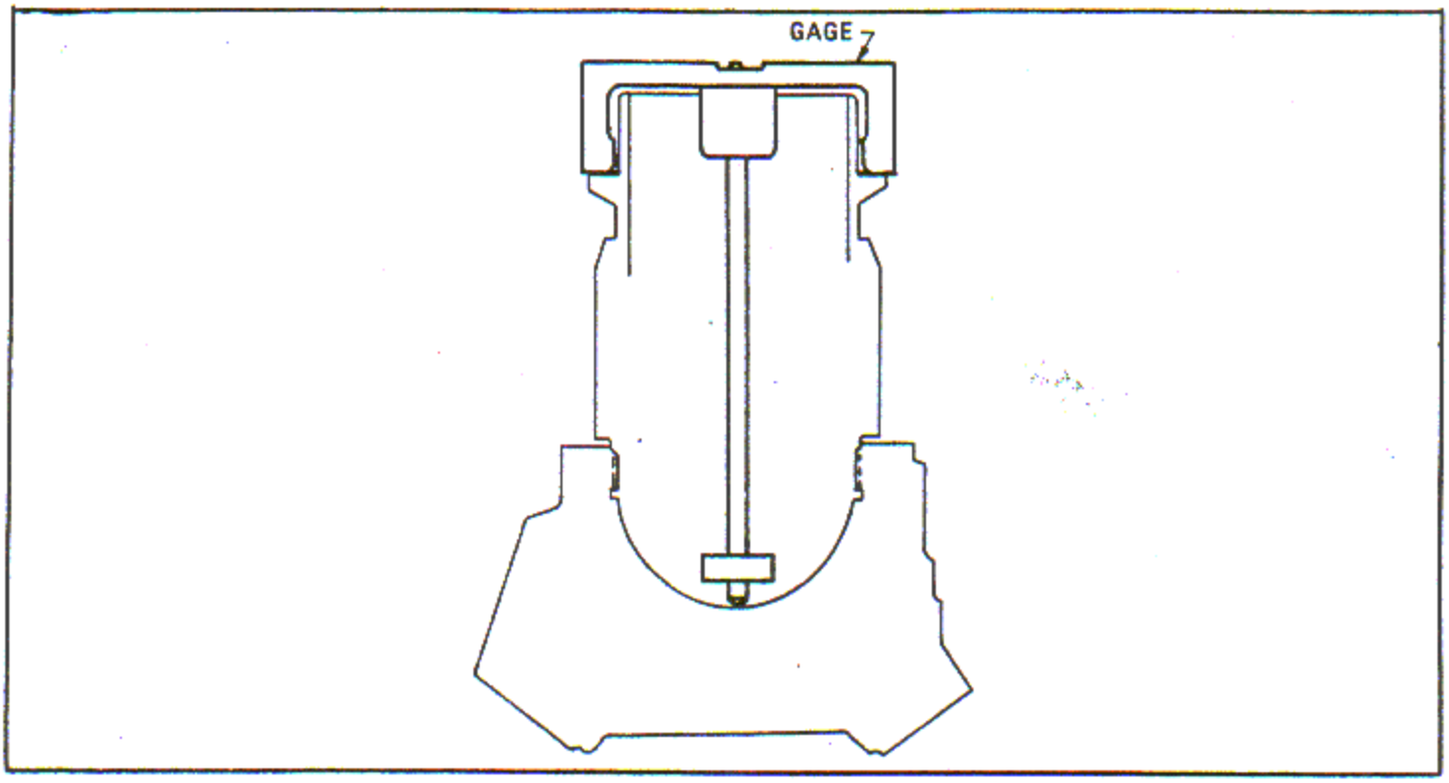

Figure 6-129. Checking Cylinder Barrel Flange Face to Cylinder Head Dome Dimension

assemblies. Apply 1000 psi hydraulic pressure in the ID of the cylinder for 3 minutes. Blow the exterior of the cylinder dry with an air blast and observe external surfaces at cylinder head to barrel location and around valve seat and spark plug location.

NOTE

No leakage is permitted during the 3 minute interval.

g. When pressure testing is completed, thoroughly wash the cylinder in a suitable varsol spray booth.

NOTE

All rebarreled cylinders shall be stamped with a die, imprinting letters RB 1/4 inch high on the outboard side of the intake rocker box.

6-428. SPARK PLUG INSERT REPLACEMENT. (See tool group 123.)

6-428A. Level and Secure Cylinder in Fixture.

a. Place cylinder in fixture on drill press table. Index fixture to proper position.

b. Screw leveling gage (1, figure 6-130) hand tight into the insert. Place a machinist level on the leveling gage and rotate the cylinder in the fixture and/or turn the fixture jackscrew until the end face of the leveling gage is square with the drill press spindle.

c. Clamp the cylinder securely in the fixture and remove the leveling gage.

6-429. Remove Insert.

a. Assemble pilot A (3, figure 6-130) to cutter A (2) and install assembly in drill press spindle. Carefully align spark plug insert with cutter pilot and clamp fixture to drill press table.

b. Bore insert to dimension A, which is 0.468 - 0.500 inch from top of insert. Pick out top of insert and remove lock pins.

c. Place cutter (2) and pilot (3) in the remainder of the insert and by applying force, spin out the insert through the cylinder head.

1. LEVELING GAGE
2. CUTTER
3. PILOT
4. CENTER
5. TAP
6. INSTALLING TOOL
7. GAGE
8. BUSHING
9. PILOT AND NUT
10. HOLDER
11. HOLDER
12. PILOT AND BUSHING
13. CUTTER
14. WRENCH
15. DRILL
16. JIG
17. CUTTER
18. PILOT
19. RING GAGE
20. BUSHING
21. CHECK NUT
22. SET SCREW
23. CENTER
24. TAP
25. THREAD CAGE

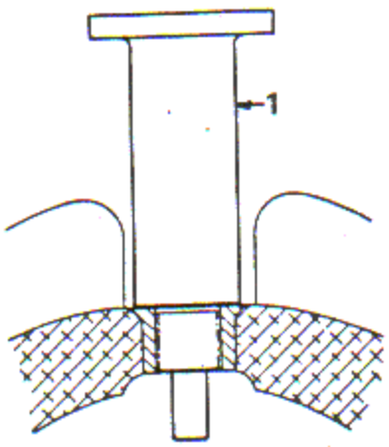

LEVELING

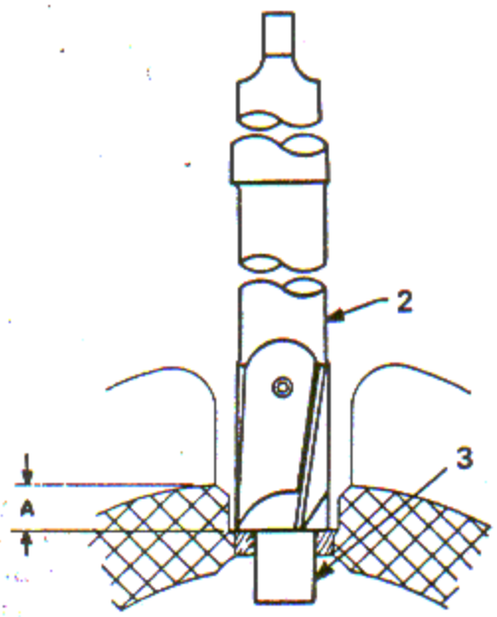

REMOVING

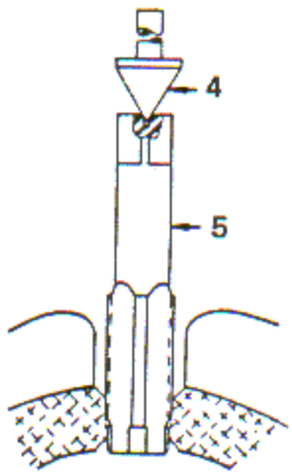

TAPPING

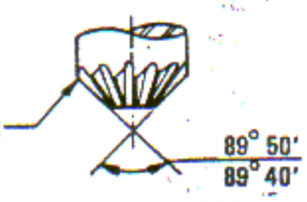

DIMENSIONS FOR REGRINDING CUTTER

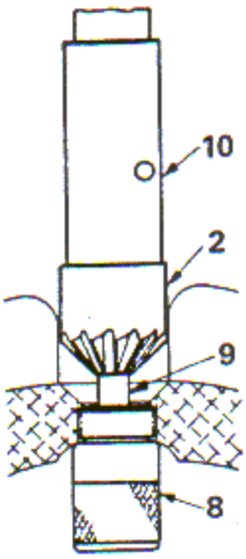

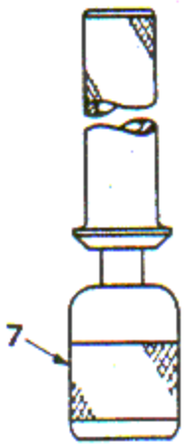

CLEANING

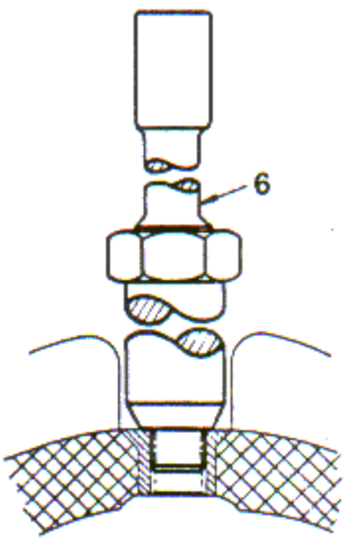

INSTALLING

Figure 6-130. Spark Plug Insert Replacement (Sheet 1 of 2)

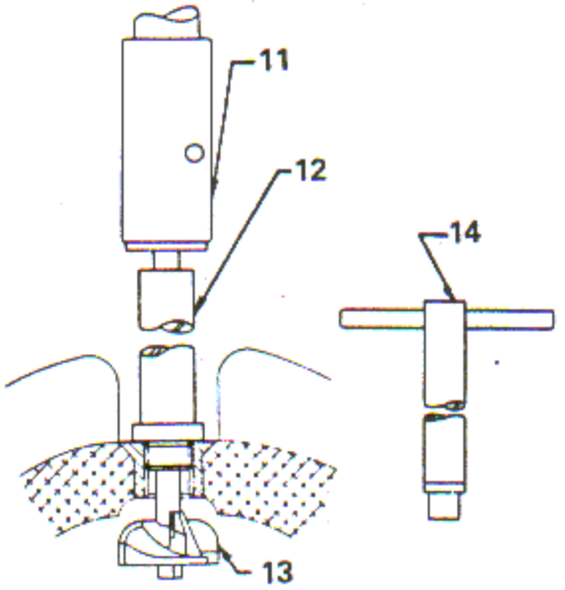

BACK-SPOTFACING

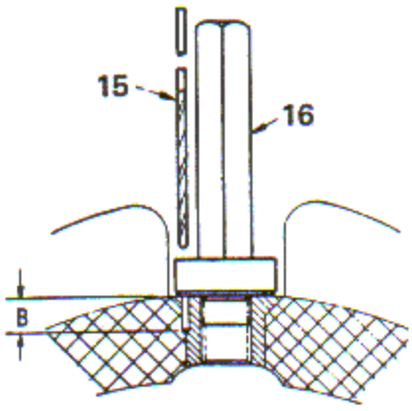

DRILL HOLE AND INSTALL NEW LOCK PIN

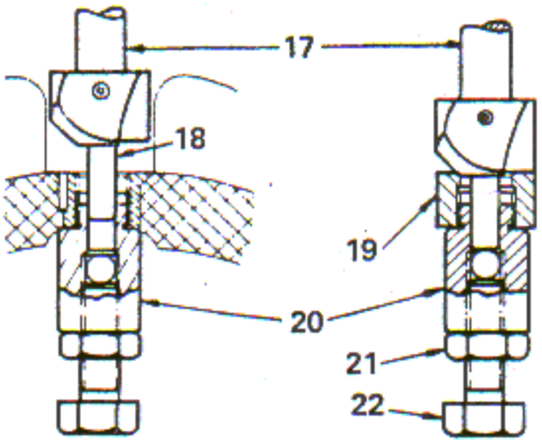

VIEW A VIEW B

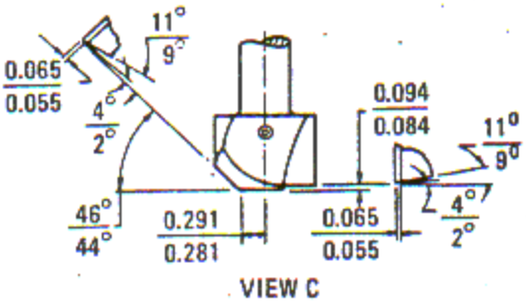

VIEW C

SPOT-FACE AND COUNTERSINK

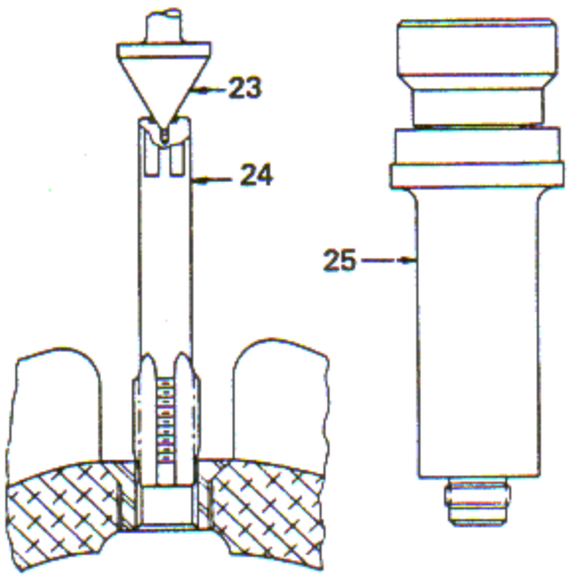

TAP INSERT HOLE

Figure 6-130. Spark Plug Insert Replacement (Sheet 2 of 2)

6-430. Tap Insert Hole in Cylinder Head.

a. With cylinder still in the fixture align drill press spindle with insert hole. Install appropriate reamer, A through D, and ream tapped hole prior to using next oversize tap.

b. Install a suitable center (4, figure 6-130) in drill press spindle as shown. Tap hole using appropriate tap, A through D (5), and suitable wrench.

c. Use center in spindle to guide tap squarely through hole. Check tappet hole with appropriate gage, B through E.

6-431. Redress Insert Cylinder Hole Chamfer.

a. With cylinder still installed in the fixture, install appropriate size bushing in spark plug insert cylinder hole as shown. Tighten bushing with wrench B.

b. Insert leveling gage into bushing ID; level the cylinder as instructed in paragraph 6-428, step b.

c. Assemble pilot and nut to cutter B and holder. Install the assembly in drill press spindle. Remove only enough material to clean up the chamfered surface. Check thickness of cylinder head dome at insert location with gage F.

NOTE

If the pin in the gage is above flush, the thickness of dome at this location is below the allowable limits and the cylinder is no longer serviceable.

6-432. Install New Insert.

NOTE

These holes shall be located approximately 45 degrees from the old lock pin location.

a. Utilizing fixture to support cylinder, mark location for two new lock pin holes.

b. Wash insert thoroughly in solvent and screw insert on installing tool (6, figure 6-130). Apply a coating of Turbo-R Joint Dressing and Sealer compound to the threads of the cylinder head and to the threads and angular seat of the insert.

NOTE

Since an interference fit exists between the head and insert, an average 200-500 inch-pounds is normal driving torque.

c. Drive insert into cylinder head, both at room temperature, using torque wrench, and noting driving torque value. A minimum driving torque of 200 inch-pounds is required at the fourth turn.

d. The total driving and seating torque shall be 2400-2500 inch-pounds.

6-433. Back-Spotface Insert.

a. With cylinder in fixture, install pilot and bushing (12, figure 6-130) in the spark plug insert, as shown, and tighten with wrench B.

b. Attach cutter C (13) to the pilot; install holder in drill press spindle and the pilot in holder.

CAUTION

Avoid cutting into cylinder head material when blending end of insert.

c. Back-spotface and chamfer dome side of insert a sufficient amount to blend end of insert with radius of dome

6-434. Drill Holes and Install Two New Lock Pins.

a. Utilizing fixture to support cylinder, screw drill jig (16, figure 6-130) into spark plug insert, aligning pilot hole with mark made in paragraph 6-432, step a.

b. Drill hole to dimension B which is 0.468 - 0.500 inch, using a No. 31, 0.120 inch diameter, five inch long drill (15). Remove drill jig, blow

chips from hole and drive pin into place. Pin must bottom in hole and be flush with, or extend above surface of insert flange.

c. Drill second hole and install lock pin in accordance with steps a and b.

6-435. Spotface and Countersink Insert Flange.

a. With cylinder in fixture, assemble cutter D (13, figure 6-130), pilot B (18), gage G (19) and bushing E (20).

b. Adjust bushing set screw (22) until the ball contacts end of pilot (18) as shown. Lock set screw with check nut (21).

c. Disassemble and screw the bushing (20) into spark plug insert from inside cylinder head. Tighten bushing securely with wrench B to preclude bushing backing out due to rotation of the cutter.

d. Spotface and countersink insert flange as shown. Check length of insert with gage H.

6-436. Tap Spark Plug Insert Hole.

a. Utilizing fixture to support the cylinder, install a suitable center in drill press spindle as shown. See figure 6-130. Run a tap through the spark plug hole using a suitable tap wrench. The insert surface and the pitch diameter of the spark plug threads must be square within 0.005 inch full indicator reading. Use center in spindle to guide tap through insert. Remove tap and blow chips from insert.

b. Check tapped hole with spark plug hole thread gage. Check squareness relationship of insert flange to thread pitch diameter using gage I. Screw gage into insert and tighten finger tight.

NOTE

An out of square condition is indicated when the top and bottom halves of the gage are eccentric to each other beyond the point of being flush.

6-437. Pressure Test Cylinder Assembly.

a. Pressure test the cylinder assembly using suitable hydraulic pressure testing equipment and standard shop practices.

b. Apply 1000 pounds per square inch pressure into the cylinder head. Hold the pressure for three minutes and observe for leaks. Blow the exterior of the cylinder dry with air blast. No leakage is permissible.

c. With the cylinder set up in the valve seat air pressure test configuration, and with internal pressure at 80 psi, spray leak detector (MIL-L-25567C or equivalent) on and around each spark plug insert to check for leaks. No leakage is permissible.

NOTE

This check shall be performed after all oven heating and cylinder head machining rework has been completed.

6-438. CYLINDER HEAD THERMOCOUPLE (BAYONET TYPE) HOLE ADAPTER, REPLACEMENT. (See tool group 139.)

a. Remove the damaged adapter from the cylinder head using adapter lug wrench and a suitable 3/8 inch driver.

b. Clean the cylinder head thermocouple hole threads by rechasing with a standard 0.375-24 tap having a pitch diameter 0.3479-0.3503 inches.

c. Air blast to remove all loosened particles and visually inspect to ensure cleanliness of holes and threads.

6-439. Install New Adapter.

a. Apply a thin coat of anti-seize compound to the threads of a new adapter. Assemble the adapter in the cylinder head using lug wrench. Torque to 20 - 50 inch-pounds using a torque wrench (Cat. No. F100-1, P.A. Sturtevant Co., Addison, Illinois, or equivalent). See figure 6-131.

NOTE

Use an anti-seize composition with the following proportions by weight.

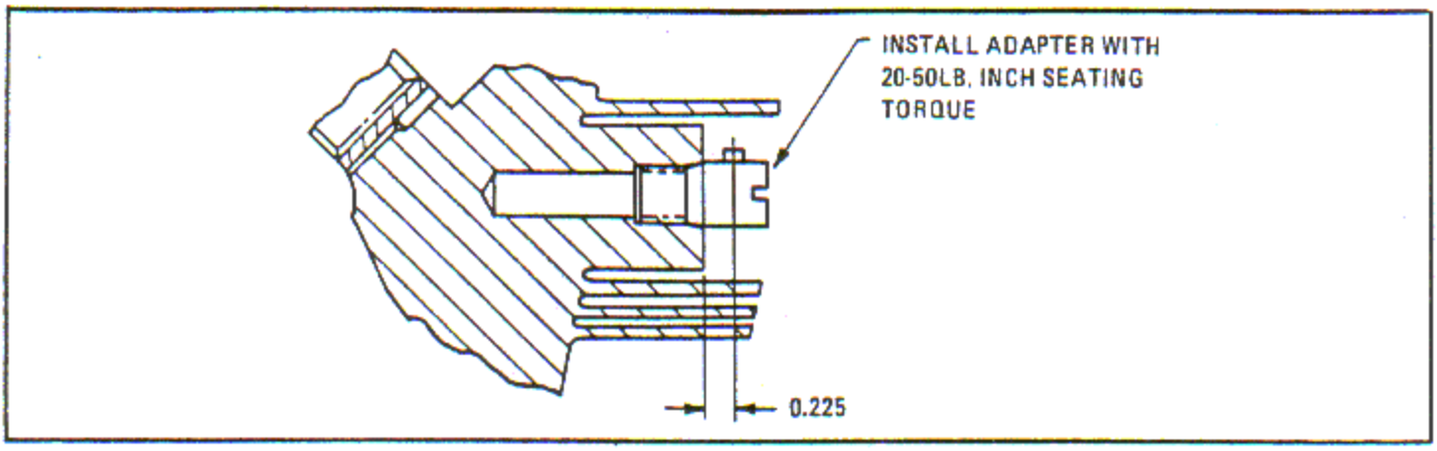

Figure 6-131. Installing Cylinder Head Thermocouple Adapter

Petrolatum Melting point 120 - 140°F (49 - 60°C)	75%
Graphite Non-abrasive powdered flake	25%

b. After assembling the adapter, check to ensure the distance between the center of the lock pin on the adapter and the cylinder head surface does not go below a minimum of 0.225 inch to ensure proper thermocouple locking clearances.

6-440. OUTER PUSH ROD HOUSING CONNECTION REPLACEMENT. (See tool group 108.)

6-441. Remove and Install Connection.

a. Place the cylinder in fixture (not shown).

b. Insert jig (2, figure 6-132) through the rocker box opening into push rod housing connection. Place jig washer (3) over screw and clamp the jig in place.

c. Drill through the connection using drill (1). Remove the jig (2).

d. Collapse the connection with a punch and remove from cylinder.

e. Place a new connection on driver (4) using nut (5). Apply cylinder head thread compound, Gasoila (Federal Process Co., Cleveland, Ohio) or equivalent, to the threads of the connection and to the connection bore.

f. Install connection in the cylinder head and torque to a value of 1100 - 1400 inch-pounds using torque wrench and extension.

6-442. CYLINDER HEAD SALVAGE REWORK FOR CRACKS AT TARGET HOLE LOCATION.

a. Inspect the affected cylinder head at the exhaust target hole for cracks. The cracking is fatigue in nature, progressing radially outward to the head flange OD and radially inward to the barrel threads ID. Use acid etch or fluorescent penetrant inspection.

b. In the event cracking is present, rework cracked heads in accordance with figure 6-133.

6-443. CYLINDER HEAD SALVAGE REWORK FOR CRACKS IN THE SPARK PLUG BOSS AREA. Cracks in the spark plug boss area can be reworked as follows:

a. If cylinder head crack is small and is confined to that area of the spark plug boss which can be machined in accordance with PPC 51, rework is feasible.

b. Process the head by incorporating the provisions of PPC 51.

c. Inspect cylinders by the eddy current method in the area reworked by PPC 51.

d. If no crack indications are present, cylinder head is acceptable.

e. If crack indications are present mark head with "ESB".

f. Visually inspect area in which eddy current examination indicated a crack.

g. Removal of the crack may be attempted by reworking the area with a .125 inch minimum

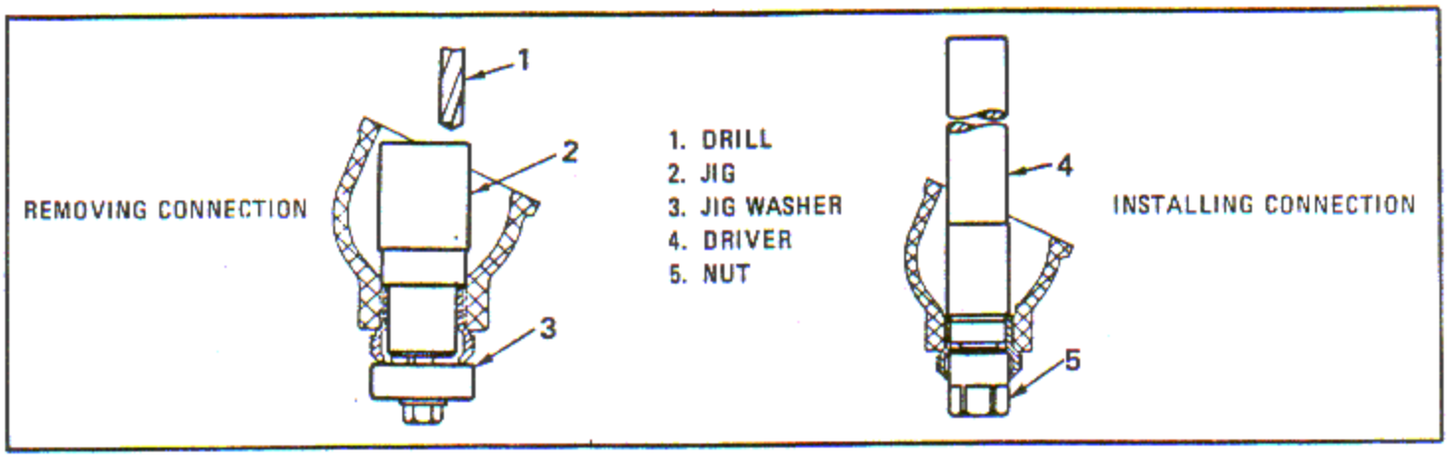

Figure 6-132. Removing and Installing Upper Push Rod Housing Connection

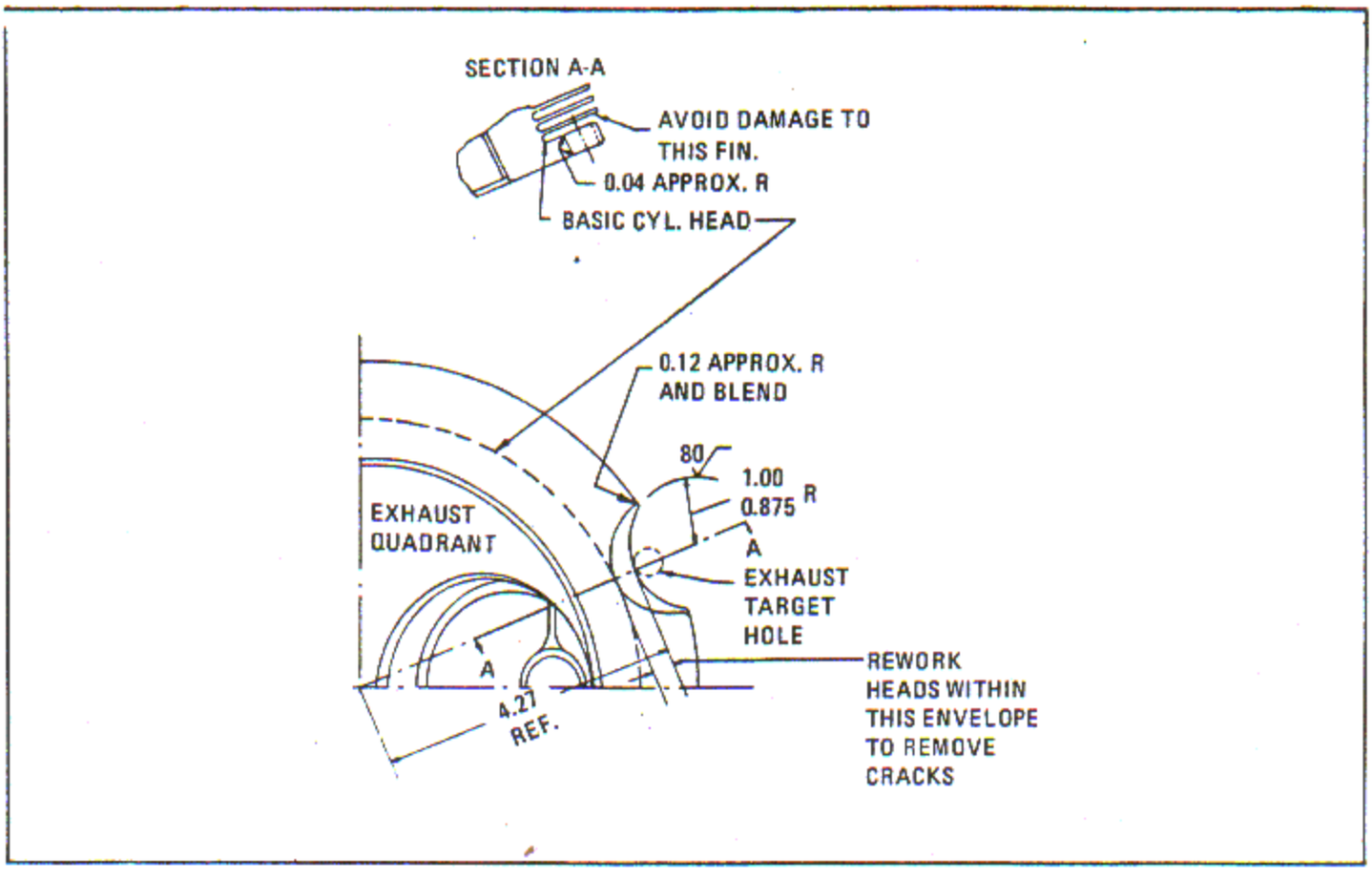

Figure 6-133. Reworking Cracked Cylinder Heads at Target Hole Location

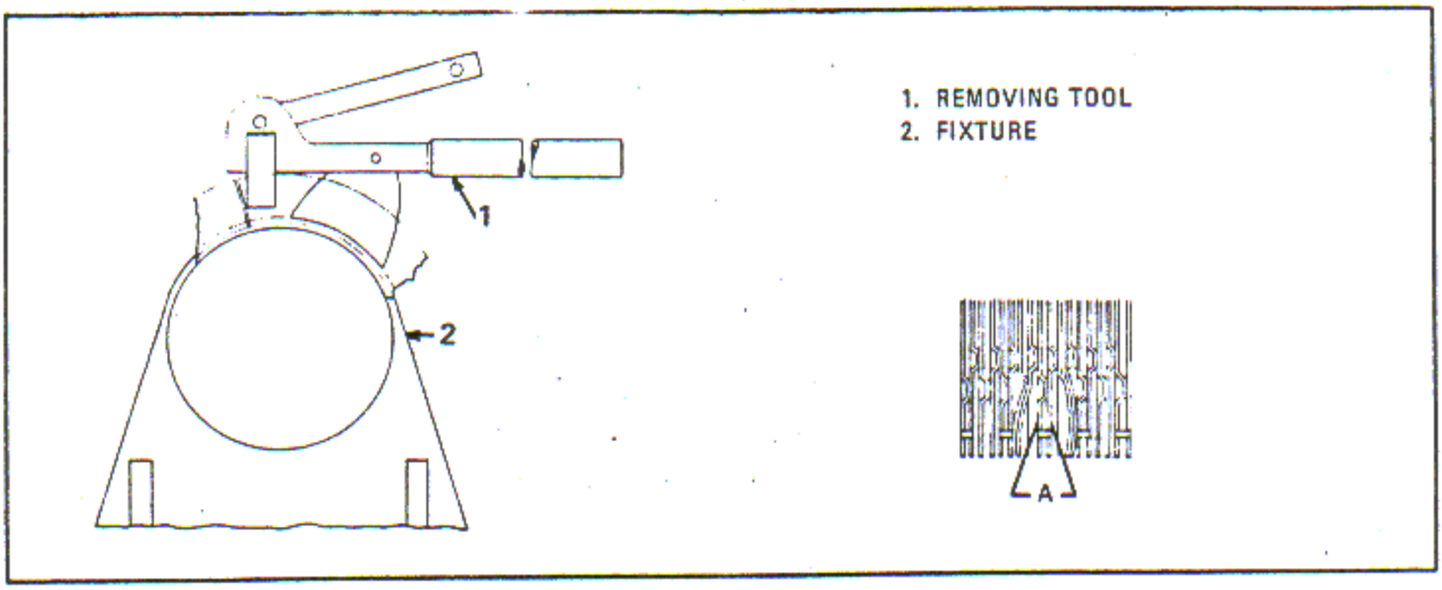

Figure 6-134. Removing Damaged Cylinder Barrel Fin

spherical radius burr or similar tool. It is permissible to remove .010 inch of metal below the fin roots and to undercut the fins 1/8 inch.

h. Reinspect the cylinders using the eddy current method.

i. If the crack indication is still present, the cylinder shall be rejected.

j. If the indications are no longer apparent, the reworked area shall be grit blasted to remove all sharp edges and corners. The cylinder is now eligible for further processing.

6-444. CYLINDER BARREL COOLING FINS, REPLACEMENT. (See tool group 36.)

6-445. Remove Damaged Cooling Fin.

a. Place the cylinder on fixture (2, figure 6-134) as shown.

b. Carefully bend the adjoining fins away from the damaged fin, as shown at A, using caulking tool.

c. Insert the flat swivel fulcrum of removing tool (1) between the blades of the fin to be removed. Grip the end of one fin blade with the plier jaws of the removing tool.

d. Start the fin blade out of its slot by pressing down on the tool handle. Exercise care to prevent excessive bending of the fin blade. Move the tool frequently and pull approximately one inch of the blade from its groove per grip until the blade has been completely removed. The remaining blade and caulking wire can then be easily removed with duck bill pliers.

e. In cases where fin blades are broken off flush or nearly flush with the cylinder barrel, use chisel to start the fin portion or caulking wire out of the fin slot in the barrel.

f. Place the chisel on the caulking wire approximately 1/4 inch from the wire end and centered over the fin slot. Tip the chisel toward the near end of the wire to about a 20 degree angle to the fin groove tangent. Tap the chisel with a lightweight hammer to cause the caulking wire to double up and coil out of the groove. When enough wire is exposed, discontinue chiseling. Pull out the remaining fin and wire with duck bill pliers.

g. Carefully inspect to ensure that the general area where the fin has been removed is free of nicks and burrs.

h. Vapor blast the fin groove.

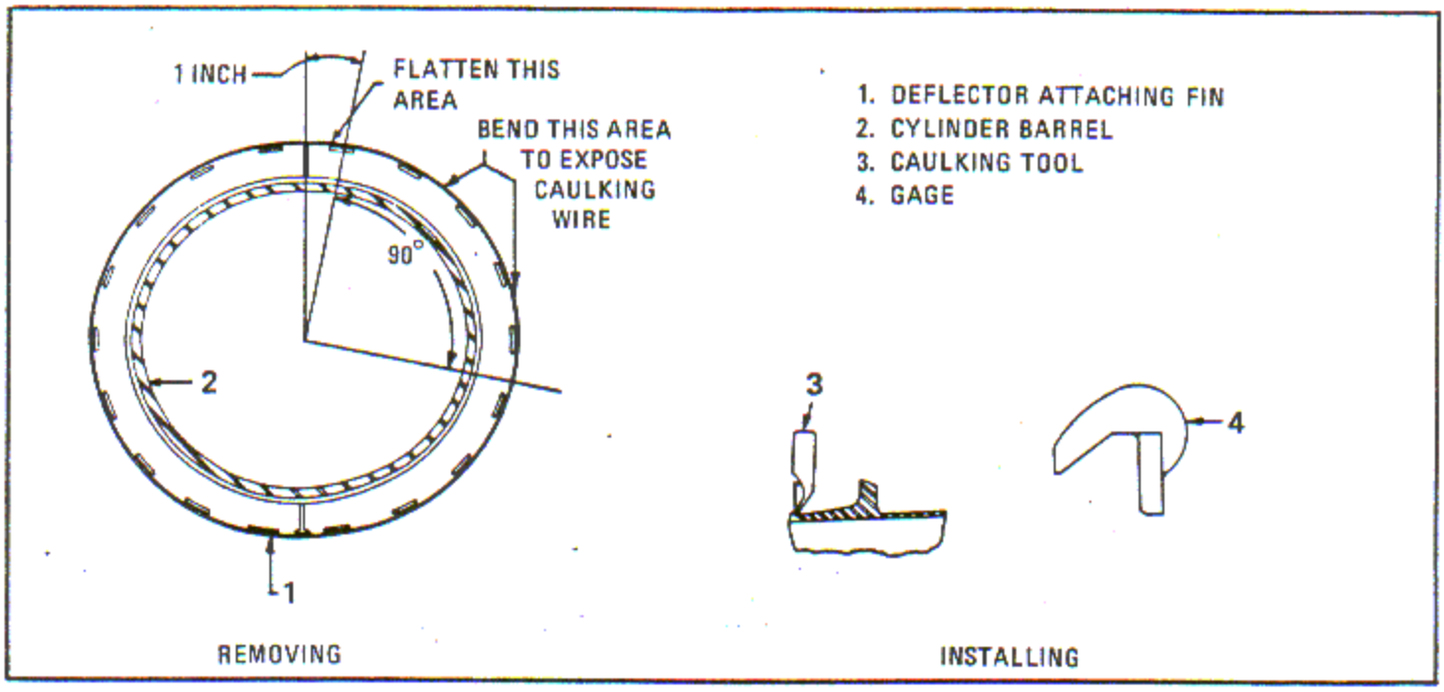

Figure 6-135. Removing and Installing Cylinder Barrel Deflector Attaching Fin

i. Apply aluminum paint to the groove.

NOTE

A mixture of 16 ounces of aluminum paint pigment, Specification TT-A-468A, Type II, Class A (AMS 3128) and one gallon of varnish, Specification MIL-V-6894A (AMS 3130) shall be used for this purpose.

6-446. Install New Cooling Fin.

a. Insert a new fin in the groove. Bottom it by tapping the outer edges lightly with a fiber mallet. Using an adjacent fin as a guide, scribe its contour on the new fin.

b. Lift out the new fin and cut off the excess with tin shears. Reinsert the fin, bottoming it again by tapping the outer edges lightly with a fiber mallet.

c. Insert caulking tool between the blades of the new fin. Caulk the fin in its slot by tapping the edge of the tool moderately with a lightweight hammer. Ensure that the caulking is uniform and complete for the full length of the fin.

d. Magnetic particle inspect the cylinder inside and out for cracks when no more fins are to be installed.

6-447. Crimp New Cooling Fin.

a. Straighten the adjacent fins with caulking tool and dress the new fin with a file to conform to the profile of the adjacent fins. See figure 2-11.

b. Crimp the fin to the correct pattern using crimping tool and a lightweight hammer.

c. Whenever four or more adjacent fins are to be crimped, use crimping tool.

6-448. Remove Cylinder Barrel Deflector Attaching Fin.

a. Straighten and flatten the flange at one end of the fin (1, figure 6-135) for approximately one inch from the gap as shown, using suitable pliers. For about 90 degrees further, straighten the flange enough to expose the fin caulking wire so the removing tool fulcrum can rest on it.

b. Grip the end of the fin with the jaws of removing tool. Rest the tool fulcrum on the caulking wire. Start removing the fin from the groove

by hand bumping down on the tool handle. The caulking wire will lift out of the groove and snap.

c. Remove the remaining portion of the caulking wire with duck bill pliers. Remove the fin from the groove.

d. Carefully inspect to ensure that the general area where the fin has been removed is free of nicks and burrs.

e. Vapor blast fin groove.

f. Apply aluminum paint to the fin groove.

NOTE

A mixture of 16 ounces of aluminum paint pigment, Specification TT-A-468A, Type II, Class A (AMS 3128) and one gallon of varnish, Specification MIL-V-6894A (AMS 3130) shall be used for this purpose.

6-449. Install Cylinder Barrel Deflector Attaching Fin.

a. Spread the new fin (1, figure 6-135) sufficiently to place it around the cylinder and in the groove.

b. Rotate the fin in the groove until the fin gap is on the cylinder front center line midway between the two front cap screw holes.

c. Install the caulking wire and stake in several places with caulking tool (3), as shown. Tap the tool moderately with a light fiber mallet.

d. Ensure that the fin gap is still on the cylinder front center line. Completely caulk the wire uniformly for the 360 degrees around the cylinder.

e. Using gage (4), check the fin completely around the cylinder to ensure it is perpendicular to the cylinder and not bent. Straighten the fin as necessary by bending with duck bill pliers or by tapping with a lightweight fiber mallet.

f. Magnetic particle inspect the cylinder, inside and out for cracks.

6-450. No. 5 and No. 6 Cylinder Air Deflector Crack Rework. Cracks up to 3/8 inch long which extend inward from the edges of the part may be blended out. Maintain 1/4 inch minimum edge distance from grommet holes and provide 1/8 inch minimum radius where metal is removed. Last 3-1/2 inches of bent up edge which lies near intake pipe may be trimmed off when cracked providing above edge distance and radius can be maintained.

6-451. CYLINDER HEAD FIN PROFILING LIMITS. (See tool group 36.)

6-451A. To determine the amount of material which may be removed from a cylinder head, consider the cylinder head as being divided into quadrants with one line through the center vertical fin from the front to rear of the cylinder and the other through the cylinder head deflector bosses from side to side across the head. See figure 6-136. Remove up to ten inches of vertical fin and nine inches of horizontal fin from each quadrant. Measure along periphery of fin; do not include the radius on the fin ends. Remove cracked portions of cylinder head fins as follows:

a. Place jig on the damaged fin so that the drill will be as nearly perpendicular to the cylinder head as practical and will meet the end of crack in the fin. See figure 6-137.

b. Using a 1/8 inch diameter drill, drill down through fin to the crack. Remove the damaged fin section.

c. Remove all sharp edges and blend smoothly.

6-452. CYLINDER HEAD DAMAGE, WELD REPAIR. Cylinder heads, damaged in the area of the forward stud on the exhaust rocker box, may be weld repaired. The maximum size of the repaired area is 1 1/2 inches, measured lineally along the rocker box cover mating surface. Repair as follows:

a. Remove the damaged section.

b. Weld the area to restore the metal removed. Weld by the heli-arc process using AMS 4190 welding wire or equivalent.

c. Machine the reworked section to restore cylinder head drawing dimensional and surface finish integrity.

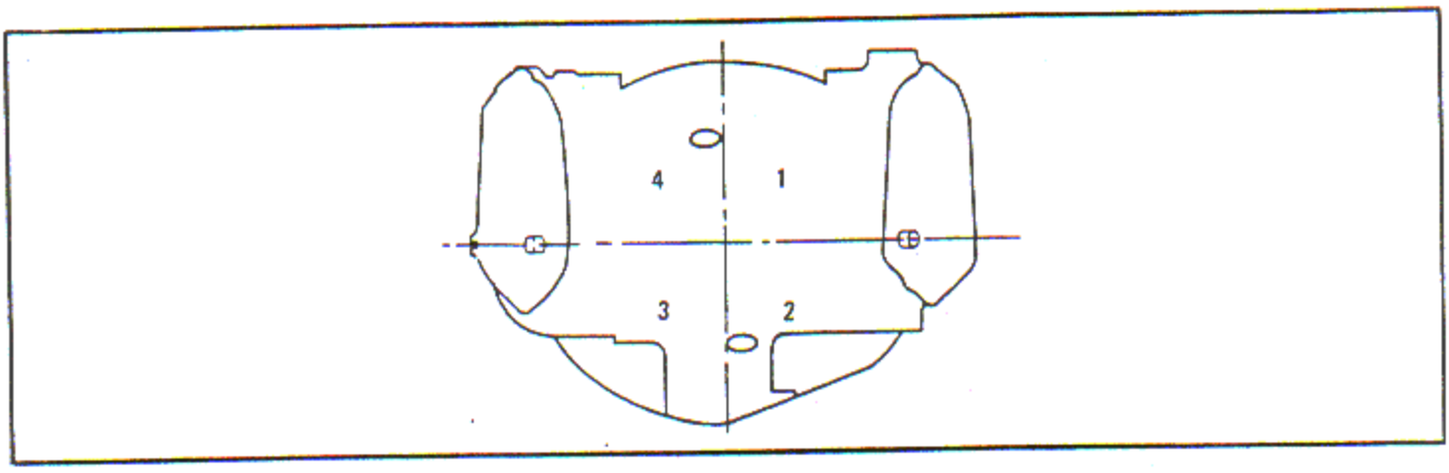

Figure 6-136. Cylinder Head Quadrants

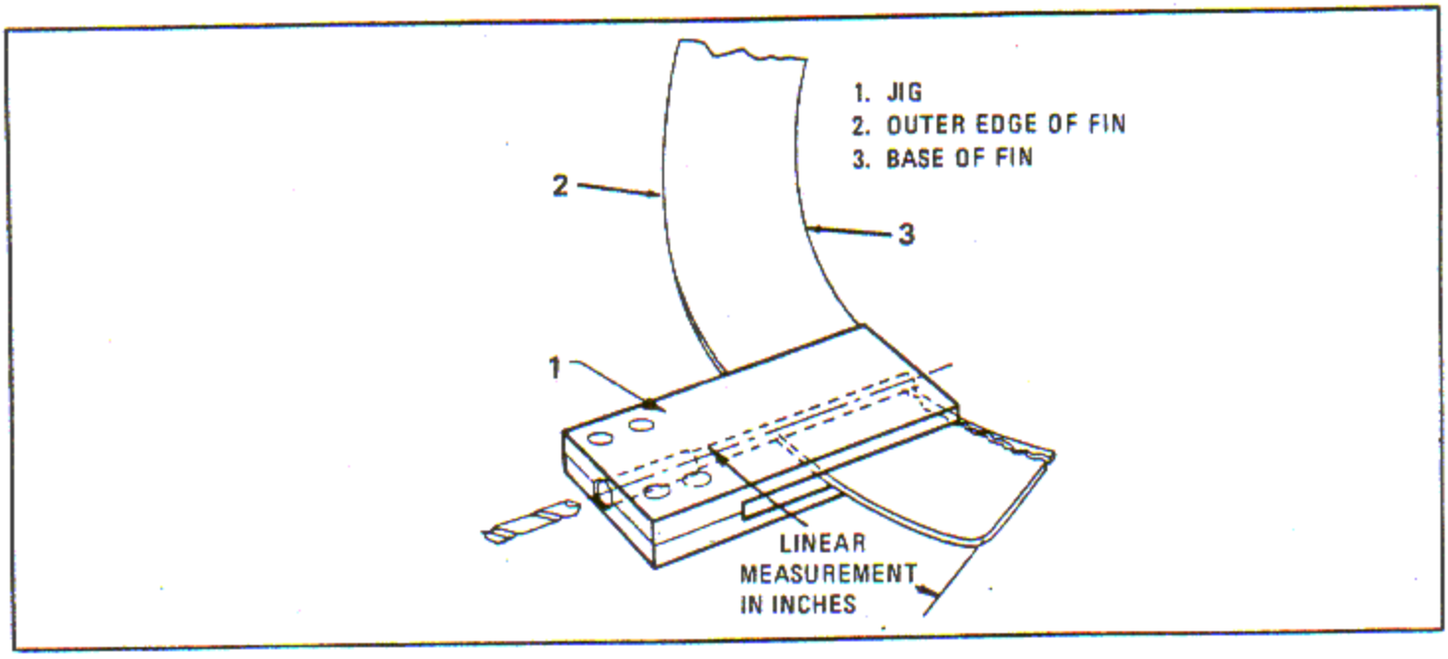

Figure 6-137. Removing Damaged Cylinder Head Fin

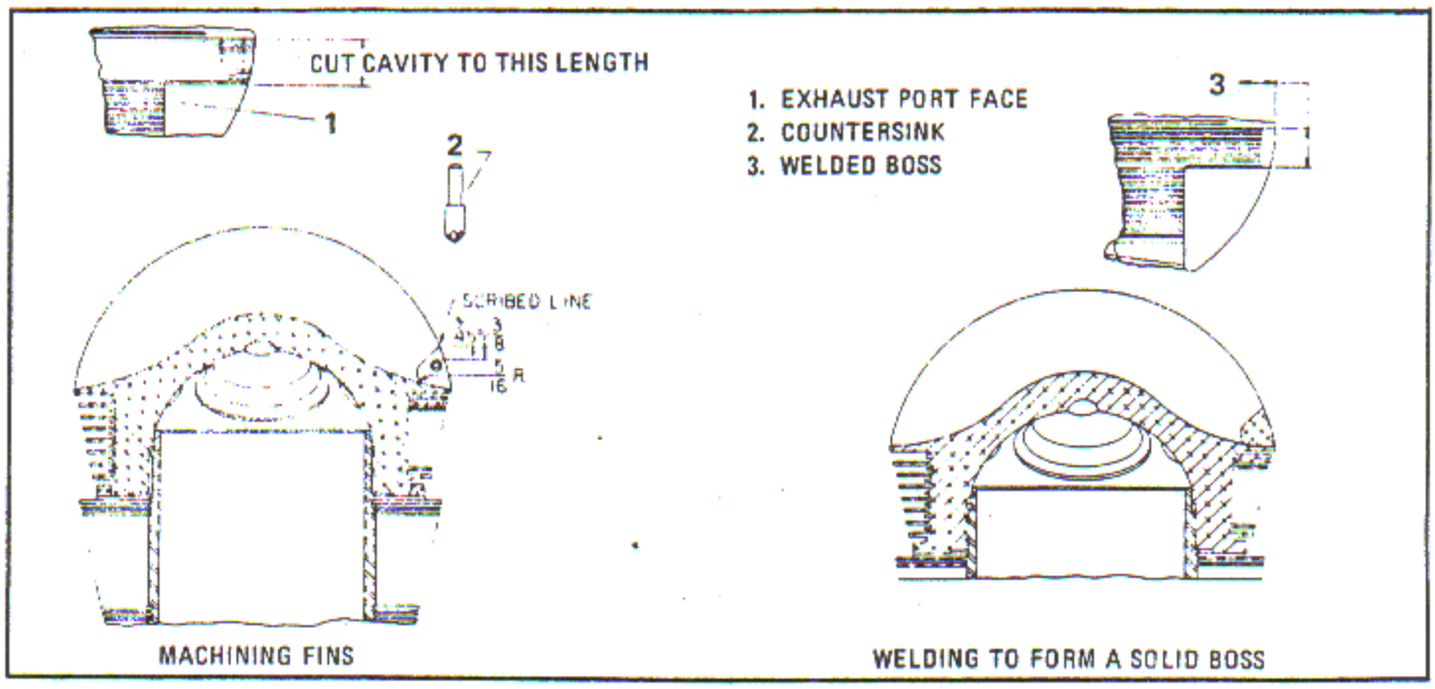

Figure 6-138. Machine Fins and Weld to Form a Solid Boss

d. Drill, tap and reinstall the rocker box to cover stud in accordance with the cylinder head drawing.

e. Insert a rocker arm hub bolt through the rocker arm bushings. If any binding occurs, the rocker box has been distorted and the cylinder head shall be rejected.

f. Check the welded area by the penetrant inspection method. No cracks are permitted.

6-453. CYLINDER HEAD VERTICAL FINS BAFFLE ATTACHING BOLT SPACES SOLID BOSS SALVAGE. (See tool group 36.)

6-454. Machine Fins.

NOTE

Use the proper coolants, as indicated in paragraph 6-197 in this and following operations.

a. Scribe a line approximately 3/8 inch above the bushing spacer and parallel to it on the radius formed by the rear vertical fin surface curvature as shown. See figure 6-138.

b. Using a suitable countersink (2), remove sufficient material from the flared end of the spacer to permit removal of the spacer with a knockout bar.

c. Inspect the baffle attaching bolt area to determine the existing spotface dimension, the spacer to be used and the position of the flange in the assembly. Record this information for use in re-establishing the dimensions after welding.

d. Use standard shop practices to remove the fin surfaces below the scribed line, forming a V shaped cavity with an approximate 45 degree angle and a 5/16 inch radius.

e. Remove the fins flush with the solid portion of the cylinder head, but do not undercut.

f. Break or blend all sharp corners and remove chips and any foreign material with an air blast.

6-455. Weld to Form Solid Boss.

a. Degrease the cavity and surrounding area thoroughly. See figure 6-138.

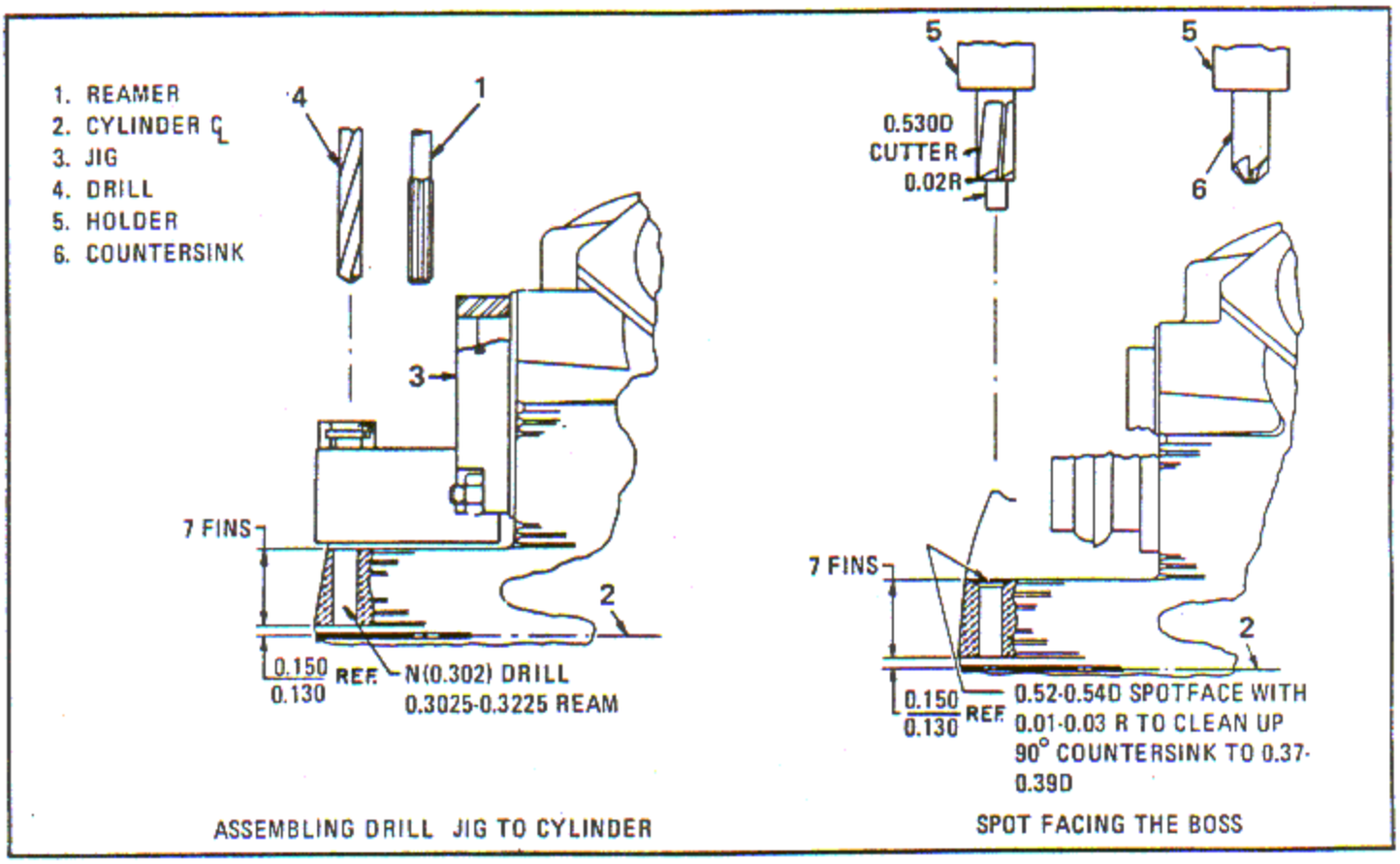

Figure 6-139. Remachine the Spacer Hole

b. Preheat the area to be welded to 149 - 204°C (300 - 400° F).

CAUTION

Care must be used when welding to avoid damage to the thermocouple area.

c. Weld the machined area by the heli-arc process using AC high frequency equipment, to form a solid boss connecting all fins and the machined area as shown. Use filler wire AMS 4190 or equivalent for the welding operation.

d. After welding, inspect the welded area using the dye penetrant method. No cracks are permitted.

6-456. Remachine the Spacer Hole.

a. Blend the outside surfaces of the vertical fins on the exhaust port and spark plug sides to the original configuration and then polish.

b. Place fixture on the table of a radial drill press and secure with clamps.

c. Assemble the cylinder to the fixture locating on the skirt diameter OD and against the flange face. Clamp in position hand tight.

d. Assemble jig B for R1820-76 Series engines, and jig C for R1820-86B, to the exhaust port flange and insert the drill bushing.

e. Insert a standard letter N drill in the drill press spindle, and align with the bushing in the drill jig. Tighten the cylinder in the holding fixture and drill through, using a spindle speed of 350 - 450 rpm and a copious flow of coolant, blend 61.

f. Replace the drill with a standard 5/16 inch reamer and the proper bushing. Ream through using a spindle speed of 550 - 650 rpm and a copious flow of coolant, blend 61.

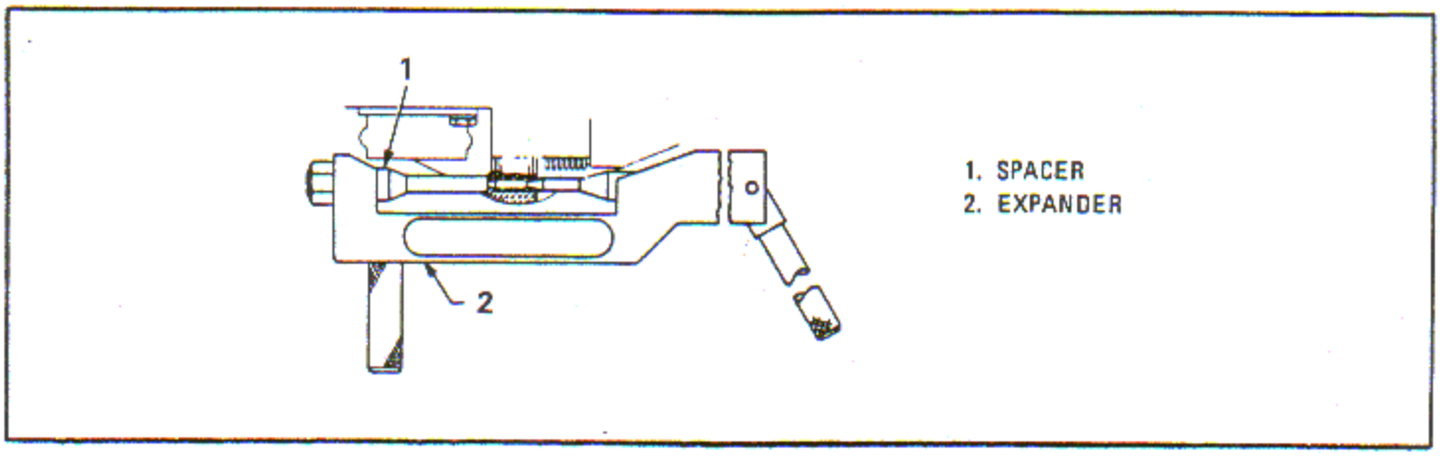

Figure 6-140. Installing Thermocouple and Deflector Spacer

g. Remove the drill jig from the cylinder and replace the reamer with the proper diameter spotface piloted cutter as predetermined from the dimensions recorded prior to welding. Spotface as shown in figure 6-139, using a spindle speed of 300 - 350 rpm and a copious flow of coolant, blend 61.

h. Replace the spotface cutter with a suitable 90 degree included angle countersink, and countersink as shown.

i. Check all the dimensions using standard inspection equipment.

6-457. Reform the Fillet Radii and Grit Blast.

a. Reform and blend the fin space fillet radii using suitable scrapers. Fillet radii are to be an approximate radius of 1/16 inch.

b. Install a suitable plug to mask off the cylinder fin spacer mounting hole, and grit blast the reconditioned area in accordance with standard procedure.

c. Check the grit blasted area using the dye penetrant method. Remove the masking plug.

6-458. Install Deflector Spacer.

a. Install a deflector spacer (1, figure 6-140) with its flange in the proper position in the boss hole.

b. Flare the small end of the spacer diameter sufficiently to prevent slipping. Use expander (2) and spacer (1) as shown.

6-459. CYLINDER BARREL FIN AND HEAD FIN SILASTIC FIN BRACES - REPLACEMENT.

6-460. Remove Silastic Braces.

a. Remove old or damaged portions of fin silastic braces.

b. Replace all loose or rotated cylinder barrel fins as instructed in paragraph 6-444. Repair head fins in accordance with paragraph 6-451.

CAUTION

Do not attempt to recaulk loose fins.

c. Degrease fins.

6-461. Install Cylinder Barrel Fin Silastic Braces.

a. Ensure cylinder barrel fins are thoroughly dry, free of dirt and dust, and at room temperature.

b. Using an extruder (Wadell Silastic Dough Extruder, Model SDE, Series No. 4010, Wadell Equipment Co., 159 Terminal Ave., Clark, N. J.) or equivalent, extrude continuous strips of silastic

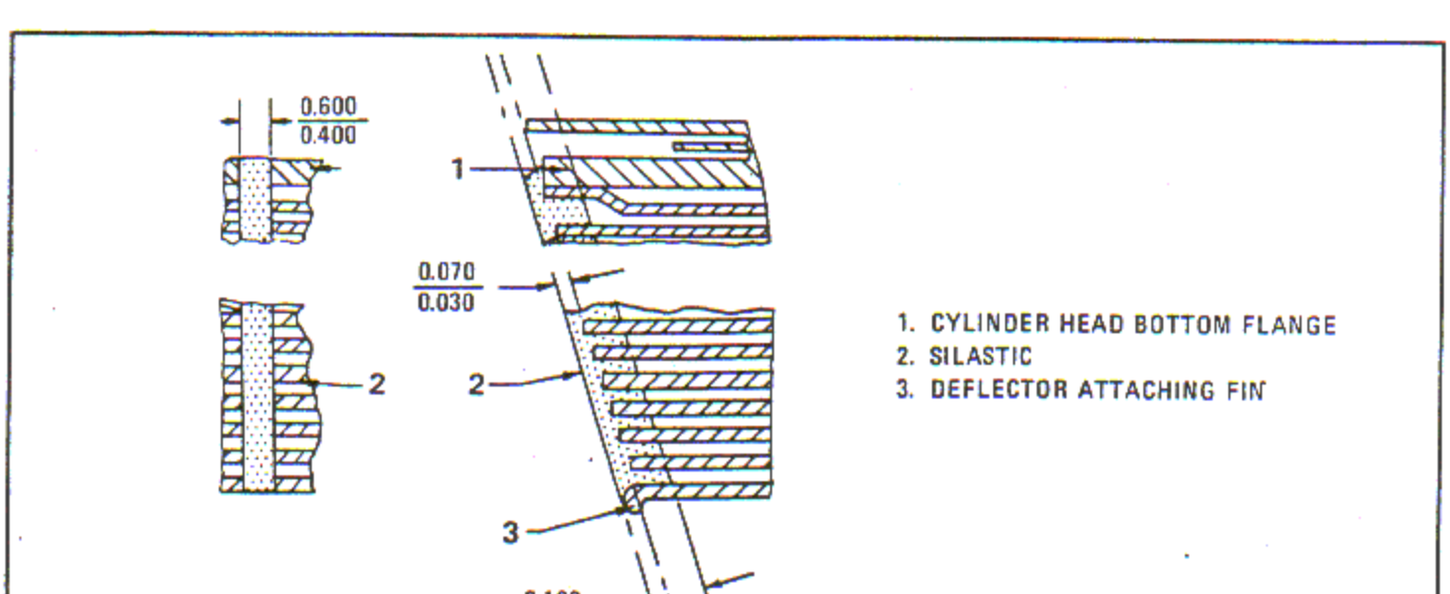

Figure 6-141. Silastic Cylinder Barrel Fin Braces

S-1774 compound (Dow-Corning Corp., 401 Sylvan Ave., Engelwood Cliffs, N. J.) or equivalent or custom compound No. CE-4512 (General Electric Co., Silicone Products Dept., Waterford, N. Y.) or equivalent in an equilateral triangular section approximately 0.300 inch on a side with 0.020 inch radius at the corners or in a circular cross section approximately 0.250 inch in diameter. Extrude the compound on heavyweight wax paper tape to facilitate handling.

NOTE

Prepare the extruded strips for storage before issue or use by placing between pieces of waxed paper in a rigid fiberboard container to prevent sagging. Store at temperatures below 15°C (60° F).

c. Cut the extruded strips into the desired lengths using a suitable knife.

CAUTION

Avoid direct contact with bare hands of the silastic compound. Any perspiration, oil or grease of any kind will affect the adhesive qualities of the compound.

d. Cylinder barrels require six silastic braces spaced approximately 60 degrees apart. One brace is located at 30 degrees either side of the front and rear centerlines. The remaining two are located one on each side of the barrel.

e. Using locally fabricated hand tools, roll or press the compound into the fin grooves to a depth of 0.100 - 0.180 inch and 0.400 - 0.600 inch wide as shown. See figure 6-141. The compound may protrude beyond the fin edges 0.030 - 0.070 inch. Extend the braces from the bottom fin (deflector attaching fin) to the top side of the cylinder head bottom flange. Apply all forming pressure on the wax paper backing. Cut off the surplus ends with a knife.

f. Strip off the wax paper backing. Mould the compound at the cylinder head bottom flange, as required, with a clean knife blade.

6-462. Install Cylinder Head Fin Silastic Brace.

NOTE

Rubber braces may be used in place of silastic compound.

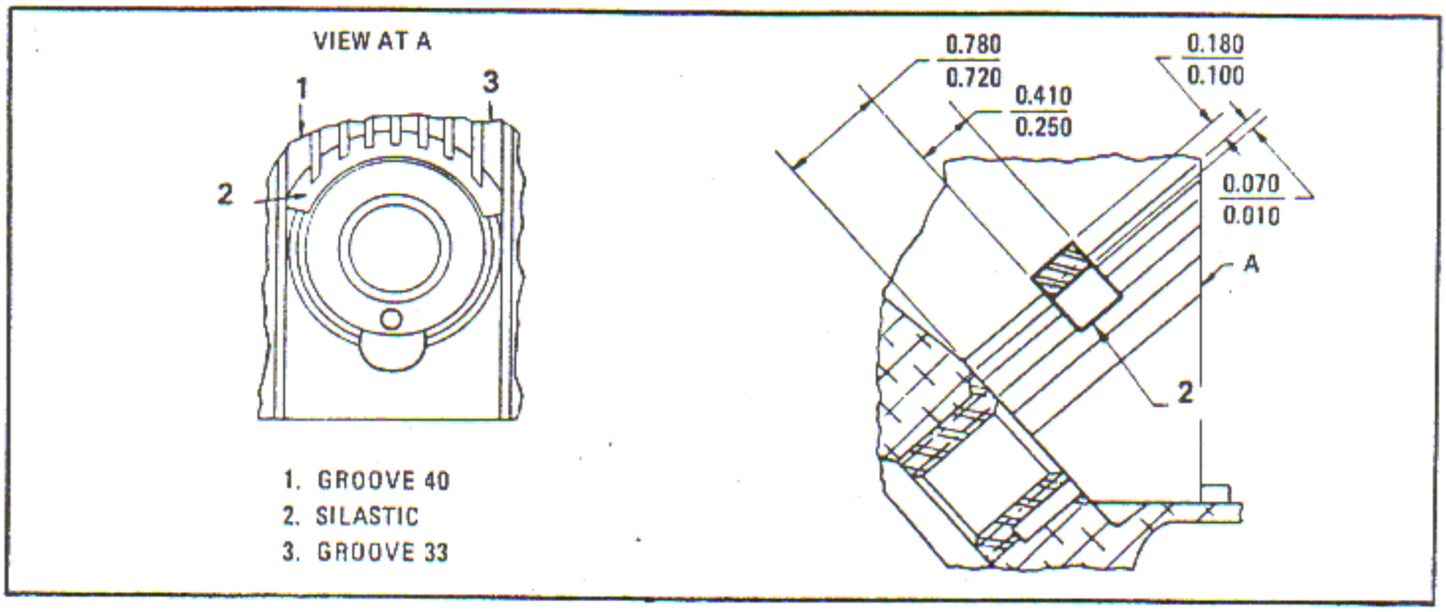

Figure 6-142. Silastic Fin Brace at Rear Spark Plug Location

a. Roll or press a previously prepared strip of silastic compound into fin grooves No. 33 through No. 40 inclusive at the rear spark plug counterbore. The strip is to be 0.350 - 0.410 inch wide, located 0.720 - 0.780 inch from the spark plug insert. Obtain a depth penetration of 0.100 - 0.180 inch into the fin grooves. The compound may protrude beyond the fin edges 0.010 - 0.070 inch. Apply all forming pressure on the wax paper backing. Cut off any surplus compound with a knife. See Figure 6-142.

b. Remove the wax paper backing.

6-463. Cure Fin Silastic Braces.

a. Cure silastic braces by oven heat as instructed in step b.

b. Place the cylinder in a suitable flameless oven heated to 157 - 162°C (315 - 325°F) for a minimum of 20 minutes to oven cure the silastic compound.

CAUTION

Exercise close control of the oven temperatures to prevent movement of cylinder valve seats or guides.

c. The cured compound should cover the designated areas and be continuous, uniform and free of imperfections. Cured test pieces of the compound should show no tendency to disintegrate when placed in varsol or trichlorethylene for five minutes. Slight swelling shall be considered normal.

NOTE

Carefully follow the manufacturer's instructions for storage temperature and shelf life of silastic S-1774 compound or custom compound No. CE-4512.

6-464. INTAKE VALVE SEAT AND GUIDE REPLACEMENT. (See tool groups 74 and 75.)

NOTE

To obtain the proper seat and guide concentricity, it is mandatory that the valve guide be replaced whenever a valve seat is replaced. If the valve seat is to be replaced, follow instructions in paragraph 6-465 through 6-472. If the valve guide only is to be replaced refer to paragraphs 6-465, 6-468 and 6-470, steps b through j; 6-471, step a only, and 6-472.

6-465. Remove Valve Guide.

a. Place cylinder in fixture (3, figure 6-143) on a drill press table as shown.

b. Level the top of the guide using a machinist's level. Rotate cylinder in the fixture or adjust fixture jackscrew (4) until top of the guide is accurately square with drill press spindle. Clamp cylinder securely to the fixture.

c. Align valve guide hole with the pilot of drill (1) and clamp the fixture securely to the drill press table.

NOTE

Whenever leveling is required in this and all following steps, it is imperative that the same level be obtained, the cylinder be placed in the same position and the reading be identical at all times.

d. Drill guide to a depth of 1.875 inches.

NOTE

In this and all succeeding paragraphs where coolant is specified, refer to paragraph 6-197 for the proper coolant blend.

e. Drive out the remaining part of the guide with punch (2).

f. Replace drill (1) with cutter (5) and a suitable holder (6). Countersink the top of the guide hole to a dimension of 1.046 inch by 45 degrees as shown.

6-466. Remove the Valve Seat.

a. Place protector in the cylinder barrel and clamp cylinder to stand (13, figure 6-143).

b. Insert drift (11) in the port behind the valve seat.

c. Place guide in valve guide hole as shown. Insert the stand plug through the dummy guide (10) and into socket of the drift (11).

d. Place the stand punch (7) over end of the plug (8) and strike with a hammer until the seat drops out. If seat is too tight to remove in this manner, remove cylinder from the stand and remove protector and drift from the cylinder.

e. Heat cylinder with nozzle (16) or place cylinder in an oven and heat to a temperature of 149 - 177°C (300 - 350°F). Check temperature with a suitable gage.

f. Insert the protector (12) and drift (11) in the cylinder and knock out the seat as outlined in steps b, c, and d.

6-467. Bore Valve Seat Recess.

a. Insert a dummy guide (20, figure 6-143) in the cylinder guide hole and place the cylinder in fixture on a drill press table. Level cylinder as outlined in paragraph 6-465, steps a, b, and c, and clamp the fixture to the table.

b. Attach proper cutter A, B, C or D (21) to bar (23), and pass the bar up through the dummy guide (20). Attach the top of bar in holder (18), placing the holder spring between the collar and body of the holder as shown. Secure the taper shank of holder directly in the drill press spindle.

c. Bore the recess using a spindle speed of 30 rpm, a feed of 0.006 inch per revolution and sufficient flow of coolant directed through the port against the cutter (21). A light skimming cut from the bottom of the recess may be necessary to clean and true up the recess. The finish at the bottom of the valve seat recess should be 40 microinches rms or better.

NOTE

The recess shall be bored oversize sufficiently to clean up its full length to ensure satisfactory retention of its seat.

d. Remove cylinder from fixture and check diameter of the recess with an inside micrometer set with an outside micrometer.

e. Check maximum removal of metal at the bottom of the valve seat recess with gage A. If any clearance is indicated between the gage and the bottom of the recess, the cylinder is no longer suitable for further service.

CAUTION

The radius formed by the cutter at the bottom of the valve seat recess must not exceed 0.090 inch to ensure proper seating of the valve seat in subsequent operations. Check with gage B.

f. Cylinders having a valve seat backing shoulder of 1/64 inch or less after reconditioning should be rejected.

6-468. Bore Valve Guide Hole.

a. Inspect valve guide hole for scoring or damage. The cylinder guide boss hole may not have been damaged when the guide was removed and in this case a new guide of the same size may be installed.

b. Check hole with the proper gage C, D, E, F or G to establish size. If the relative NO-GO gage does not enter the hole, omit this operation.

c. If the gage enters the valve guide hole, bore to the next oversize. Use a cylinder boss boring machine (Wadell Equipment Company, 159 Terminal Avenue, Clark, New Jersey) or equivalent, and refer to instructions supplied by the manufacturer. Bore the valve guide hole to obtain a surface finish of 32 microinches rms or better.

NOTE

The valve guide boss shall be bored oversize sufficiently to clean up 100 per cent for its full length to obtain optimum retention of the replacement guide.

d. Recheck with the proper gage C, D, E, F or G.

6-469. Check Valve Seat Recess and Cylinder Guide Hole for Squareness and Concentricity. Check concentricity of the recess using the proper gage H or I and squareness at the bottom of the recess, relative to the valve guide hole using the proper gage J or K at four equally spaced locations.

NOTE

All readings shall be taken with hands off the gage. The maximum permissible amount of eccentricity is 0.004 inch full indicator reading and out-of-squareness is 0.002 inch full indicator reading.

6-470. Install Valve Guide and Seat.

a. Check the backing face of the valve seat with gage B to ensure that radius is not less than 0.100 - 0.110 inch and that the radius is blended smoothly into adjoining surfaces.

b. Check the end of the guide, which will protrude into the rocker box, to ensure the OD is concentric with the guide bore within 0.002 inch full indicator reading. If it is not concentric, machine a 0.020 - 0.040 inch by 45 degree chamfer at the end of the OD of the guide, holding concentricity to 0.002 inch full indicator reading.

c. Assemble guide on installing arbor (25, figure 6-143) and the seat on installing tool (26). Chill both the guide and seat in accordance with standard procedures for 10 minutes.

d. Place cylinder on holder (18), which is supported on a bench top heavily insulated with asbestos. The bench top should be provided with a three sided shield made of sheet metal.

CAUTION

Keep the flame moving at all times, directing it evenly around the fins and inside the ports for not less than two minutes.

e. Heat cylinder with nozzle.

f. Check at intervals with a suitable temperature gage until temperature reaches 288 - 316°C (550 - 600°F). The cylinder may also be heated in a flameless type oven to the same temperature.

NOTE

If only the valve guide is being replaced, heat the cylinder to a temperature of 232 - 260°C (450 - 500°F).

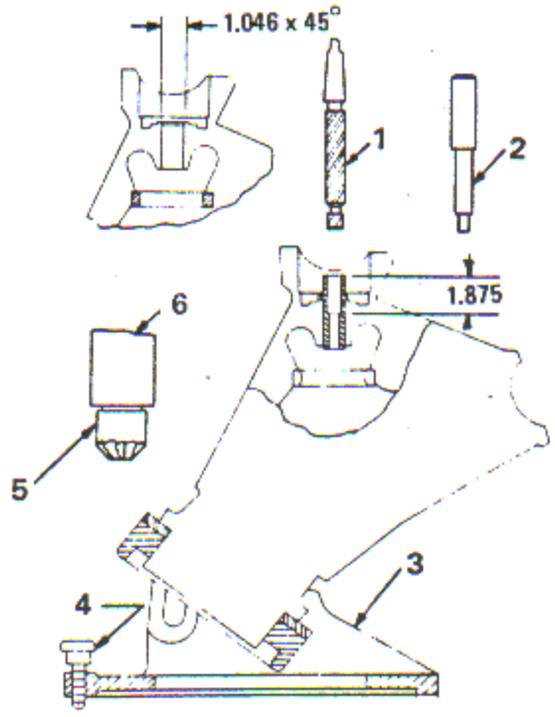

1. DRILL
2. PUNCH
3. FIXTURE
4. FIXTURE JACK SCREW
5. CUTTER
6. HOLDER
7. STAND PUNCH
8. STAND PLUG
9. PILOT BUSHING
10. DUMMY GUIDE
11. DRIFT
12. PROTECTOR
13. STAND
14. ILLUMINATING GAS
15. AIR
16. NOZZLE
17. GAGE
18. HOLDER
19. DEPTH GAGE
20. DUMMY GUIDE
21. CUTTER
22. RADIUS GAGE
23. BAR
24. SPRING HOLDER
25. INSTALLING ARBOR
26. INSTALLING TOOL

REMOVING INTAKE VALVE GUIDE

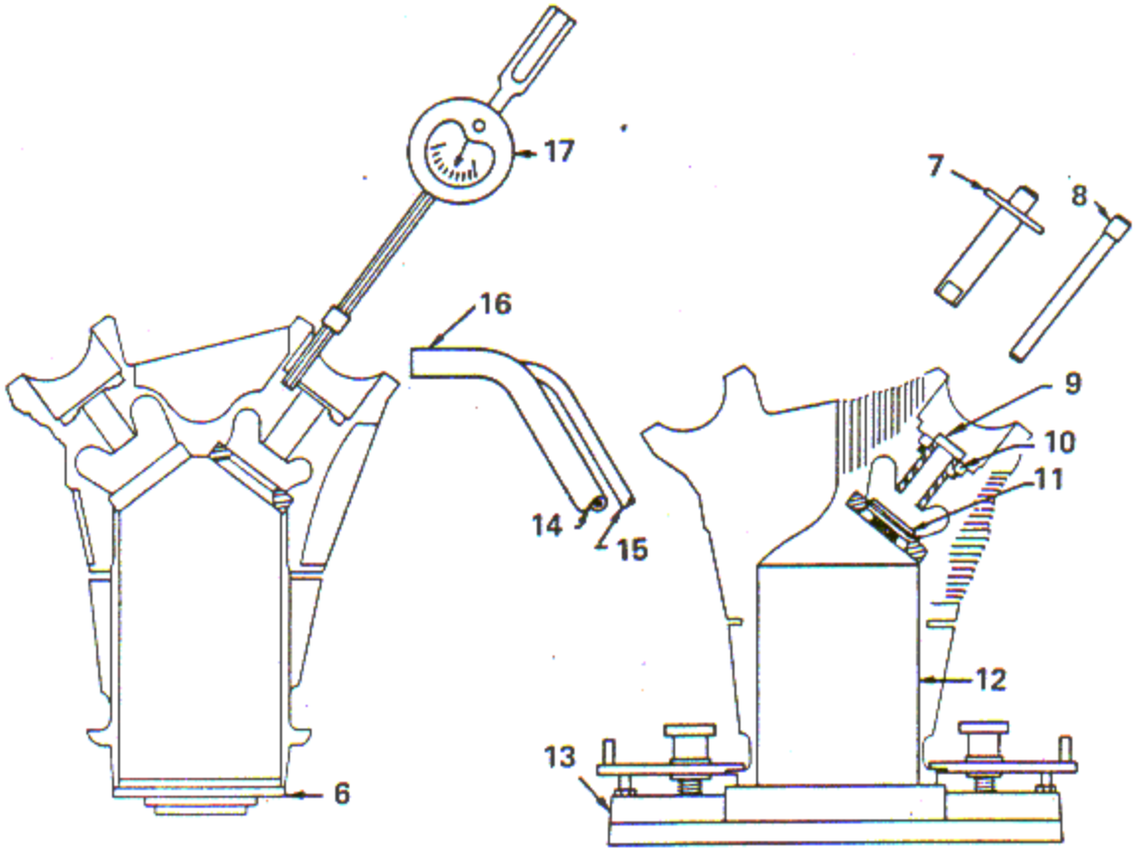

REMOVING INTAKE VALVE SEAT

Figure 6-143. Intake Valve Seat and Guide Replacement (Sheet 1 of 2)

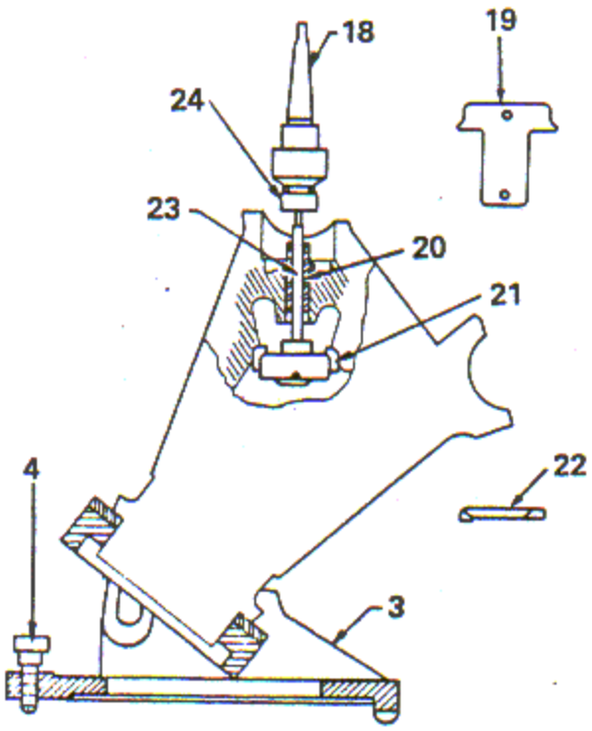

BORING VALVE SEAT RECESS

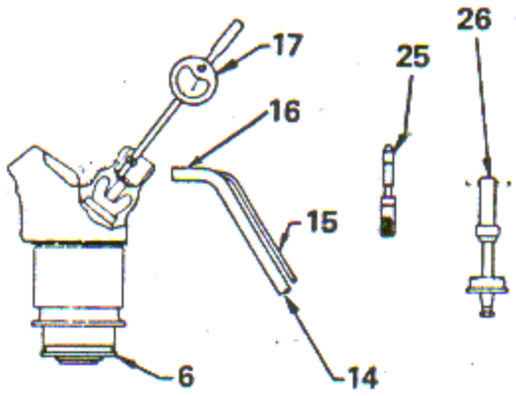

INSTALL VALVE GUIDE AND SEAT

Figure 6-143. Intake Valve Seat and Guide Replacement (Sheet 2 of 2)

g. Remove the cylinder from holder (18, figure 6-143) and place it with skirt down on a bench. Install guide rapidly to provide impact for proper seating. Press against the arbor (25) and hold in this position for approximately 15 seconds. Remove the arbor quickly.

CAUTION

Do not attempt to seat the guide by striking the end of the arbor with a hammer due to the possibility of fracturing the guide flange.

h. Invert cylinder and rest it on the bench at approximately a 45 degree angle. Insert seat with installing tool (26). Tighten securely and leave the tool in the cylinder. Support cylinder, with skirt up, for at least five minutes before removing tool.

i. Check the clearance under the guide after cylinder has cooled. Clearance must not exceed 0.005 inch. If the clearance is greater the guide must be replaced.

j. Check clearance between the seat and the bottom of its recess. If clearance is more than 0.002 inch but not greater than 0.015 inch, reheat the cylinder to 260 - 316°C (500 - 600°F) and drive in seat until clearance does not exceed 0.002 inch. Use a 5/8 inch diameter bar about 15 inches long inserted into cupped end of installing tool. Strike opposite end of the bar with a hammer. If clearance still exceeds 0.015 inch, the seat should be replaced.

6-471. Ream Valve Guide Stem Hole and Grind Seat.

a. Ream valve guide with valve guide reaming machine, (Wadell Equipment Company, 159 Terminal Avenue, Clark, New Jersey) or equivalent, and refer to instructions supplied by the manufacturer. Obtain a surface finish of 25 microinches rms or better.

b. Grind the valve seat using suitable equipment to obtain a surface finish of 32 microinches rms or better.

6-472. Check Reamed Hole and Concentricity with Valve Seat.

a. Check reamed hole with gage L.

b. Check concentricity of the stem hole and valve seat angle with concentricity gage. The reading must be within 0.002 inch full indicator reading. Break the edge at the bottom of the valve guide stem hole to a 0.003 - 0.010 inch radius.

c. Perform a compression test on the cylinder as outlined in paragraph 6-497.

6-472A. EXHAUST VALVE GUIDE REWORK. Clean up the bore of the guide by using a reamer of sufficient size to remove all traces of carbon and corrosion. If, due to flaring, the reamer doesn't clean up the ends of the guide, it is permissible to clean them with crocus cloth to a maximum depth of 3/8 inch. A surface finish of 60 microinches rms or better is required. Assure that maximum allowable bore diameter has not been exceeded by checking with a plug gage as described in paragraph 6-109.

6-473. EXHAUST VALVE SEAT AND GUIDE REPLACEMENT.

6-474. Remove Exhaust Guide Retainer Sleeve. (See tool group 44.)

NOTE

To obtain proper seat and guide concentricity, it is mandatory that the valve guide be replaced whenever a valve seat is replaced. Proceed in accordance with paragraphs 6-474 through 6-485. If the guide only is to be replaced, proceed in accordance with paragraphs 6-486 through 6-495.

a. Place the cylinder with fixture (1, figure 6-144) on a drill press table in the position shown. Level the top of the guide with a machinist's level, rotating the cylinder in the fixture or turning the fixture jackscrew (2) until the top of the guide is accurately square with the drill press spindle. Clamp the cylinder securely to the fixture.

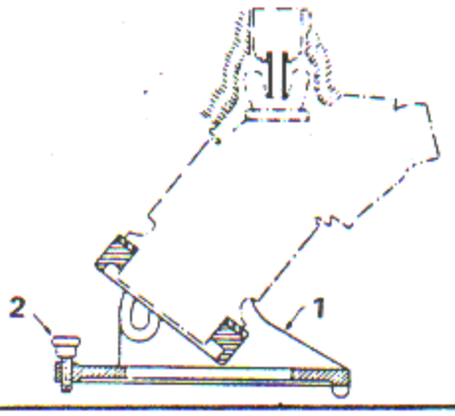

1. FIXTURE
2. FIXTURE SCREW-JACK

Figure 6-144. Remove Exhaust Valve Guide Retainer Sleeve

b. Insert drill into the drill press spindle and align it with the exhaust valve guide hole. Secure the fixture firmly to the drill press table.

c. Drill down approximately one-half inch into the valve guide and sleeve. Use the proper coolant as specified in paragraph 6-197.

d. Remove the retainer sleeve.

6-475. Remove Valve Seat And Guide. (See tool groups 44, 47 and 75.)

a. Degrease the cylinder thoroughly to minimize discoloration during subsequent heating.

b. Assemble holder (2, figure 6-145, view A), with appropriate details, and a locally fabricated spacer in the cylinder head as shown, to deter intake valve seat and guide movement.

c. Install holder (2) between the rocker arm shaft bushings in each rocker box. The holders will deter bushing movement.

d. Place the cylinder on holder, which is supported on a bench top heavily lined with asbestos and shielded on three sides with sheet metal.

NOTE

A thermostatically controlled oven may be used in lieu of the nozzle to facilitate production.

e. Heat the cylinder with nozzle, applying the flame evenly around the fins and inside the exhaust port. Check the head temperature frequently with a temperature gage (Catalog No. 1645-8, Alnor-Pyropoint plus No. 1310 thermocouple, Illinois Testing Laboratories, Inc., Chicago, Ill., or equivalent) until the temperature reaches 288 - 316°C (550 - 600°F).

CAUTION

Ensure that the flange of the remover is tight against the valve seat to minimize water leakage at this point. Expand the remover sufficiently to seal the ID of the seat. Overexpansion of the remover head will not permit sufficient shrinkage of the valve seat for its removal.

f. Remove the cylinder from the holder and quickly install water cooled remover in the valve seat, piloting the shank of the tool in the exhaust valve guide. See figure 6-145, view B. Expand the remover (5) in the valve seat ID by holding the tool head and turning the shank clockwise with the T handle wrench.

g. Chill the valve seat by running cold water through the remover. Allow sufficient time for the seat to shrink before attempting to push it out. If necessary, strike the T handle with a rawhide mallet to remove the seat.

h. If the copper ring (a detail of a copper backseat) does not come out with the seat, place protector (6) in the cylinder barrel. Install remover and tighten the nut to imbed the remover threads in the ID of the copper ring. Insert punch through the exhaust valve guide hole and into the remover hole. Strike the punch until the ring drops out.

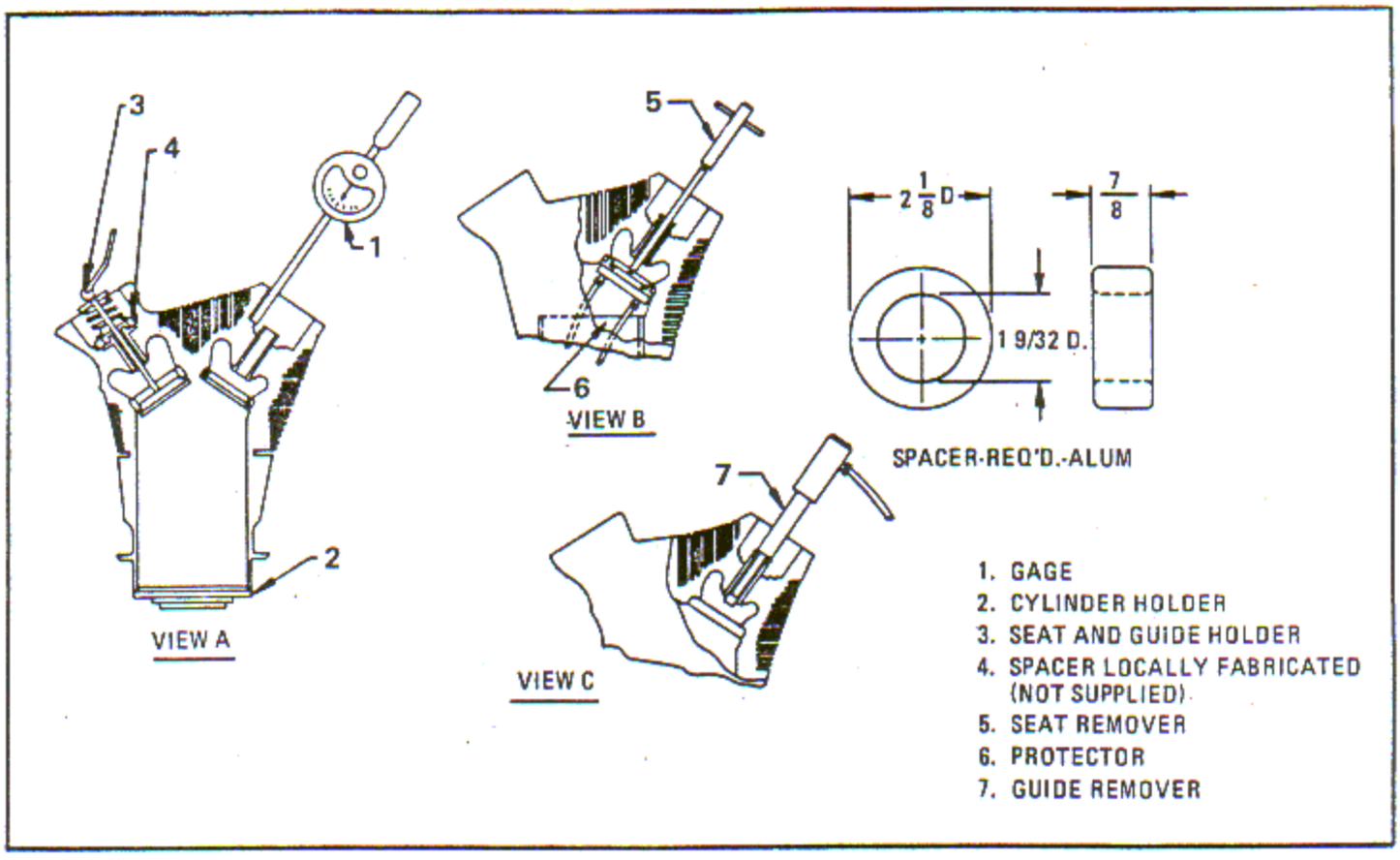

Figure 6-145. Remove Exhaust Valve Seat and Guide

i. Install valve guide water cooled remover (7) in the guide ID as shown in figure 6-145, view C. Chill the guide by running cold water through the remover. Allow sufficient time for the guide to shrink, then push it out.

j. Remove the holders from the intake valve guide and rocker box positions after the cylinder has cooled to room temperature.

6-476. Bore Exhaust Guide Boss Hole for Oversize Guide. (See tool group 44.)

a. Measure the guide boss hole length with a 1.380 inch checking gage, see figure 6-146, view B. If the gage passes over the boss, the cylinder is no longer serviceable. Using a suitable checking gage, measure the minimum thickness between the guide-boss hole and the outer surface of the boss in an eroded area. The cylinder is no longer serviceable if the thickness is less than 0.150 inch.

b. Bore the valve guide boss hole to the first oversize after 100 per cent cleanup, using a cylinder boss boring machine (Model CBG-1, Wadell Equipment Company, 159 Terminal Avenue, Clark, N.J.). Refer to the manufacturer's operating instructions. A surface finish of 32 microinches rms or smoother is desired. However, bands of 45 microinches rms maximum are acceptable over 75% of the bore.

NOTE

The valve guide boss bore shall be bored oversize sufficiently to clean up 100 per cent for its full length to obtain optimum retention of the replacement guide.

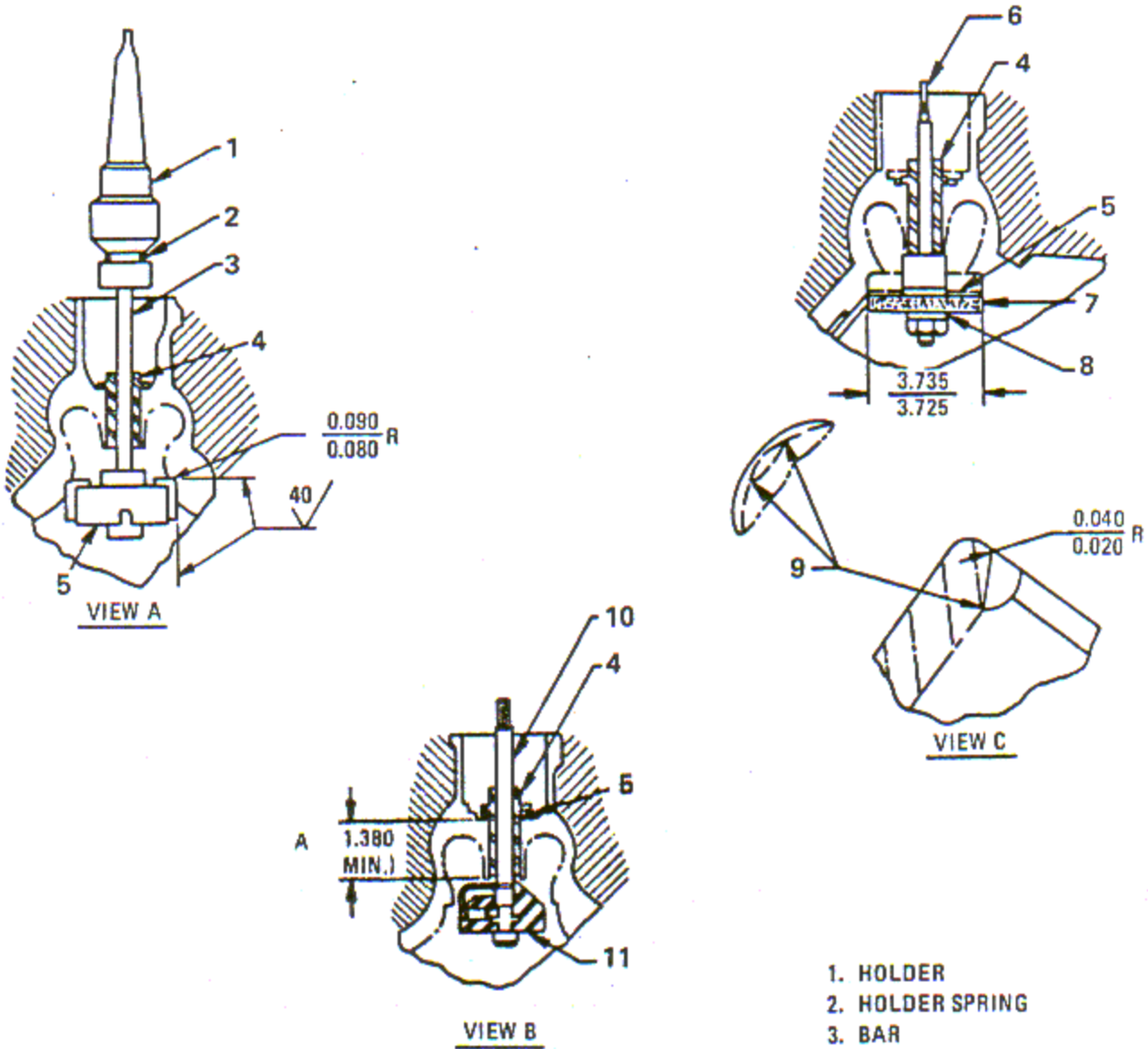

Figure 6-146. Bore Valve Seat Recess Back Spotface and Chamfer Bottom of Valve Guide Boss

c. Check the finished bore with the proper plug gage. Record the oversize in accordance with the following list.

Oversize (Inch)	Bore Diameter (Inches)	Dummy Guide Size (Inches)
0.005	0.972 - 0.973	0.9718
0.010	0.977 - 0.978	0.9768
0.020	0.987 - 0.988	0.9868
0.030	0.997 - 0.998	0.9968
0.040	1.007 - 1.008	1.0068
0.050	1.017 - 1.018	1.0168
0.060	1.027 - 1.028	1.0268
0.070	1.037 - 1.038	1.0368
0.080	1.047 - 1.048	1.0468
0.090	1.057 - 1.058	1.0568
0.100	1.067 - 1.068	1.0668
0.110	1.077 - 1.078	1.0768
0.120	1.087 - 1.088	1.0868
0.130	1.097 - 1.098	1.0968

6-477. Bore Valve Seat Recess, Back Spotface and Chamfer Bottom of Valve Guide Boss. (See tool groups 42, 44 and 47.)

a. Clamp the cylinder loosely in fixture and set the assembly on the table of a suitable drill press.

b. Insert proper size dummy guide into the valve guide hole. Refer to the list following paragraph 6-482.

c. Level the top of the guide as instructed in step a, paragraph 6-474. Ensure that the dummy guide hole is aligned with the drill press spindle and clamp the fixture securely to the drill press table.

d. Insert the tapered shank of valve seat recess counterbore holder into the drill press spindle.

e. Assemble proper size cutter to bar, and pass the bar up through the dummy guide. Attach the end of the bar to the holder, placing the holder spring between the collar and body of the holder. See figure 6-146, view A.

f. Bore the valve seat recess to the first oversize after it cleans up 100 per cent. True up the bottom of the recess with a light skimming cut. Direct a free flow of cutting oil through the port to the cutter blades. Refer to paragraph 6-197. Operate the spindle at 75 to 100 rpm and with a feed of 0.006 to 0.009 inch per revolution. The cutter must be ground to cut an 0.080 to 0.090 inch radius between the side and bottom of the recess. Obtain a 40 microinches rms finish or better. See the following list for recess oversizes.

NOTE

The valve seat recess shall be bored oversize sufficiently to clean up and remove carbon and eroded material to a length of at least 1/16 inch wider than the seat. This will provide sound material for retention of the seat. A clean line of aluminum should be visible above the seat after installation.

Oversize Inch	Recess Diameter (Inches) 45 Degree Seats	38 Degree Seats
0.010	3.621 - 3.623	3.5675 - 3.5695
0.020	3.631 - 3.633	3.5775 - 3.5795
0.040	3.651 - 3.653	3.5975 - 3.5995
0.060	3.671 - 3.673	3.6175 - 3.6195
0.080	3.691 - 3.693	3.6375 - 3.6395
0.100	3.711 - 3.713	3.6575 - 3.6595

g. If interference is encountered between the larger oversize recess cutters and the top of the cylinder barrel, the barrel must be ground in accordance with the following steps. See figure 6-146, view C.

h. Determine the valve guide boss hole length using checking gage. If the boss length is less than 1.480 inches (standard), locally fabricate a spacer to be used with arbor (6) to compensate for the undersize boss length.

i. Assemble the spacer and grinding wheel (Norton 38A80L8VG, Norton Company, Worcester 6, Mass., or equivalent) on the arbor. Dress the wheel to a 3.735 - 3.725 inch diameter.

j. Set up the cylinder for grinding as instructed in steps a through d and install the arbor assembly up through the guide and into the holder.

CAUTION

Ensure that the grinding wheel does not touch the barrel prior to the actual grinding.

k. Grind the barrel using maximum spindle speed (6000 rpm if possible), a light hand feed and a liberal flow of coolant directed through the exhaust port at the area being ground. Refer to paragraph 6-197 for coolant.

l. Remove the arbor assembly and complete steps e and f.

m. Remove the recess cutter assembly from the cylinder and replace the holder in the drill press spindle with a suitable chuck. Install spacer under the dummy guide (4) as shown in figure 6-146, view B.

n. Assemble proper size facing cutter to facing bar, as indicated by the following listed oversizes. Use proper cutter gage if cutter requires regrinding.

Bore Oversize (Inch)	Chamfer Diameter (Inches)
0.010	1.090 - 1.120
0.020	1.100 - 1.130
0.040	1.120 - 1.150
0.060	1.140 - 1.170
0.080	1.160 - 1.190
0.100	1.180 - 1.210

o. Insert the facing bar (10) up through the dummy guide (4) and secure it in the drill press chuck. Back spotface the valve guide boss only enough to clean up and cut a 43 - 47 degree chamfer at the bottom of the guide hole.

p. Remove the facing bar (10), dummy guide (4) and spacer from the cylinder. Check the boss length with checking gage. The gage must pass snugly or not at all over the boss hole ends. If the gage fits loosely over the hole ends, the cylinder is no longer serviceable. Using a suitable checking gage, measure the minimum thickness between the guide-boss hole and the outer surface of the boss in an eroded area. The cylinder is no longer serviceable if the thickness is less than 0.150 inch.

q. Remove the cylinder from the fixture and check the ID of the valve seat recess with an ID micrometer set with an OD micrometer.

r. Reject any cylinder having a valve seat backing shoulder of 1/64 inch or less material after reconditioning.

s. Check the depth of the recess for 38 degree seats with depth gage. If clearance is indicated between the gage and valve seat recess floor, the cylinder is no longer suitable for service use. Check the depth of the recess for 45 degree seats with depth gage. If no clearance is indicated between the gage and valve seat recess floor, install a standard thickness exhaust valve seat. If clearance is indicated, see the next step.

NOTE

Steps t and u apply to 45 degree face angle only.

t. Check the recess depth with gage. If no clearance is noted between the recess floor and gage, install a 0.020 inch oversize thickness valve seat. This seat has oversize outside diameters of 0.040, 0.080 and 0.100 inch. If clearance is indicated, see the next step.

NOTE

Exhaust valve seat and ring assemblies in .003, .005, .010, .030, .050, .070 and .090 oversize OD, nor .040 oversize width will no longer be available after present supply is exhausted.

u. Check the recess depth with gage. If no clearance is noted between the recess floor and gage, install a 0.050 inch oversize thickness valve seat. This seat has oversize outside diameters of 0.040, 0.060, 0.080 and 0.100 inch. If clearance is indicated, the cylinder is no longer suitable for service use.

v. On cylinders where barrel grinding was performed, blend the juncture of the scallop and barrel radius. Reprovide the radius at the top of

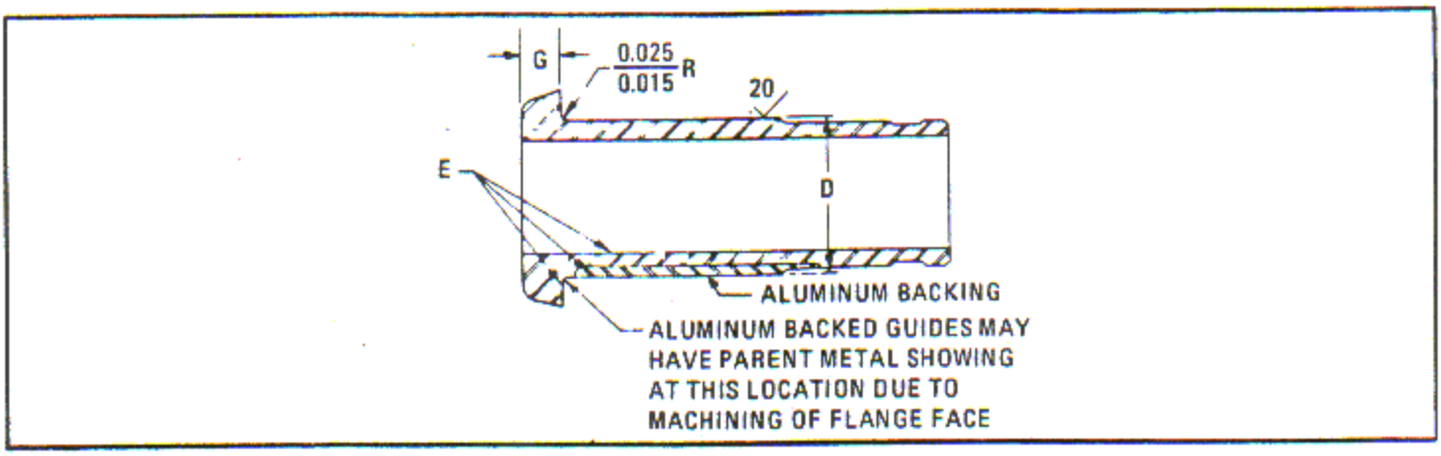

Figure 6-147. Exhaust Guide Machining Dimensions

the scallop as shown in figure 6-146, view C, using a small pneumatic grinder and charged wheel. Break all sharp edges.

6-478. Check Seat Recess and Guide Boss Hole Squareness and Concentricity Relationship. (See tool group 47.)

a. Check the squareness and concentricity relationship of the guide boss hole and the valve seat recess using concentricity gage and squareness gage.

b. Take readings at four equally spaced locations with hands off the gage.

c. The maximum permissible out-of-squareness of the recess floor to the guide hole is 0.002 inch full indicator reading.

d. The maximum permissible eccentricity of the recess diameter to the boss hole is 0.004 inch full indicator reading.

6-479. Machine Guide Prior to Installation.

a. Determine the required valve guide flange thickness (G) by checking the cylinder guide boss hole length with closest fitting length checking gage. See figure 6-147. Refer to the following list for the required flange thickness.

Boss Hole Length After Back Spotfacing (Inches)	Flange Thickness (G) Through Thickest Section (Inch)
1.465 - 1.490	No facing required *
1.435 - 1.465	0.280 - 0.290 **
1.405 - 1.435	0.310 - 0.320 **
1.380 - 1.405	0.335 - 0.345 **

* With Std. and OS, OD and Std. flange thickness.
**With OS, OD and OS flange thickness.

b. Refer to the following list for the required D dimensions to be used for machining the valve guide OD to suit specific guide boss oversizes.

Oversize (Inch)	Diameter D (Inches)
0.005	0.9775 - 0.9770
0.010	0.9825 - 0.9820
0.020	0.9925 - 0.9920
0.030	1.0025 - 1.0020
0.040	1.0125 - 1.0120
0.050	1.0225 - 1.0220
0.060	1.0325 - 1.0320
0.070	1.0425 - 1.0420
0.080	1.0525 - 1.0520
0.090	1.0625 - 1.0620
0.100	1.0725 - 1.0720
0.110	1.0825 - 1.0820
0.120	1.0925 - 1.0920
0.130	1.1025 - 1.1020

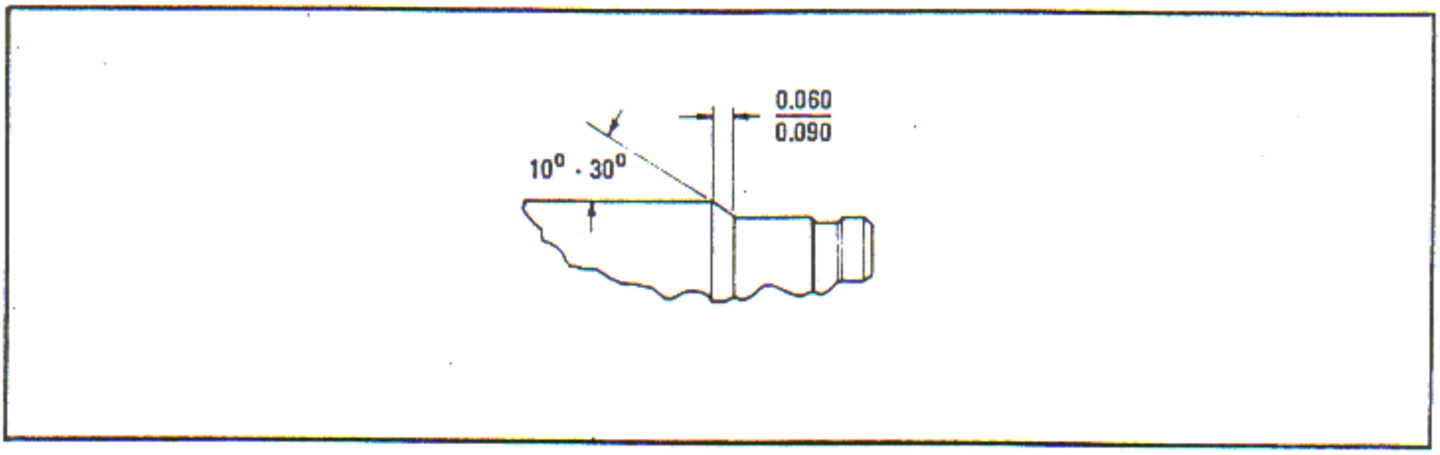

Figure 6-148. Aluminum Backed Exhaust Valve Guide Chamfer Dimensions

c. Employ standard machine shop practice to machine the underside of the guide flange and OD to their respective sizes as determined in steps a and b.

d. All E surfaces constructed around or at right angles to a common axis when part is mounted on surface F must be within 0.001 inch full indicator reading.

NOTE

All flange thicknesses must be held to plus or minus 0.005 inch. Blow holes, chipped or other abnormal surface conditions, unless functionally detrimental, shall be considered acceptable. The required surface finish of the guide OD is 20 microinches rms or better.

e. Break all sharp edges to a 0.015 - 0.030 inch radius.

6-480. EXHAUST VALVE GUIDE, ALUMINUM BACKED, INSTALLATION. If necessary, the following may be used to facilitate installation of the subject guides:

a. Lubricate the guide with hydraulic oil.

b. Taper the anti-flange aluminum edge with abrasive paper or chamfer the edge as shown in figure 6-148.

6-481. Install Exhaust Guide and Seat. (See tool groups 44 and 47.)

a. Assemble the valve guide on arbor and the valve seat on installer. Chill the assemblies using standard procedures.

b. Prepare and heat the cylinder to 288 - 316°C (550 - 600°F). Refer to paragraph 6-475.

c. Remove the cylinder from the holder or oven and place it head down on an asbestos lined bench top.

d. Insert the valve guide with the installing arbor (1) as shown in figure 6-149, view A. Press down against the arbor for a moment to permit the temperatures to equalize.

CAUTION

Do not attempt to seat or reseat the guide by impacting as it may fracture the valve guide flange.

e. Remove the arbor from the guide and quickly install the valve seat and installer as shown in view B. Ensure that the seat has bottomed in its recess, then tighten the overhead portion of the installer securely with the handle. Permit the cylinder to cool for approximately 5 minutes before removing the installer.

f. After the cylinder has cooled to room temperature, check for clearance between the guide flange and the cylinder boss. If the clearance exceeds a maximum of 0.005 inch, remove

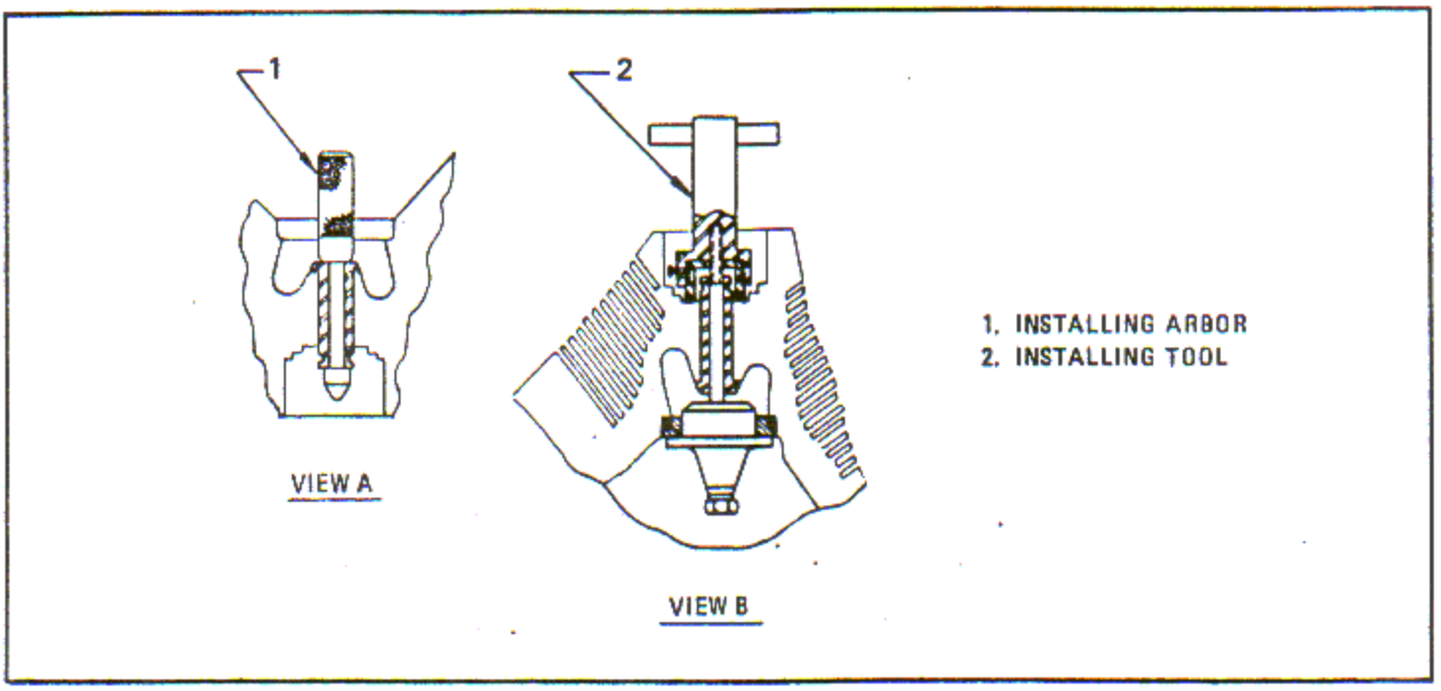

Figure 6-149. Installing Exhaust Valve Guide and Seat

the guide in accordance with paragraph 6-475. Inspect the boss hole and guide for damage. If found satisfactory, reinstall the guide.

g. Check for clearance between the seat and the bottom of the recess using a 0.002 inch feeler gage. If the gage enters, reheat the cylinder and chill the seat in accordance with instructions in paragraph 6-475. When the seat feels loose in the recess, bottom it. Replace the removing tool with an exhaust seat and guide holder.

NOTE

Use a locally made spacer between the holding tool exhaust guide retainer and the guide flange to ensure the guide is held in place.

h. Remove the seat and guide holder after the cylinder has cooled.

i. Recheck the clearance between the valve guide flange and the cylinder boss as in step f.

CAUTION

Under no circumstances is an exhaust valve seat to be seated or reseated by impacting, since the seat relies primarily on its lip for retention. Impacting the seat to bottom it will result in shearing metal from the recess wall. The material builds up under the lip, rendering the lip, ineffective.

6-482. Install Exhaust Valve Guide Retainer Sleeve.

a. Heat the retainer sleeve in a flame or flameless oven to 232 - 260°C (450 - 500°F).

b. Install the retainer sleeve over the valve guide as shown, using installing tool (1, figure 6-150). Hold the retainer sleeve down firmly against the lower valve spring seat until a pinch fit is obtained.

6-483. Install Exhaust Valve Guide Retainer Sleeve by Alternate Method.

a. Heat the retainer sleeve using a gas torch (burner) to a temperature of approximately 343°C (650°F).

b. Install the retainer sleeve over the valve guide as shown in figure 6-150 using a suitable installing tool. Hold the retainer sleeve down firmly against the lower valve spring seat until a pinch fit is obtained.

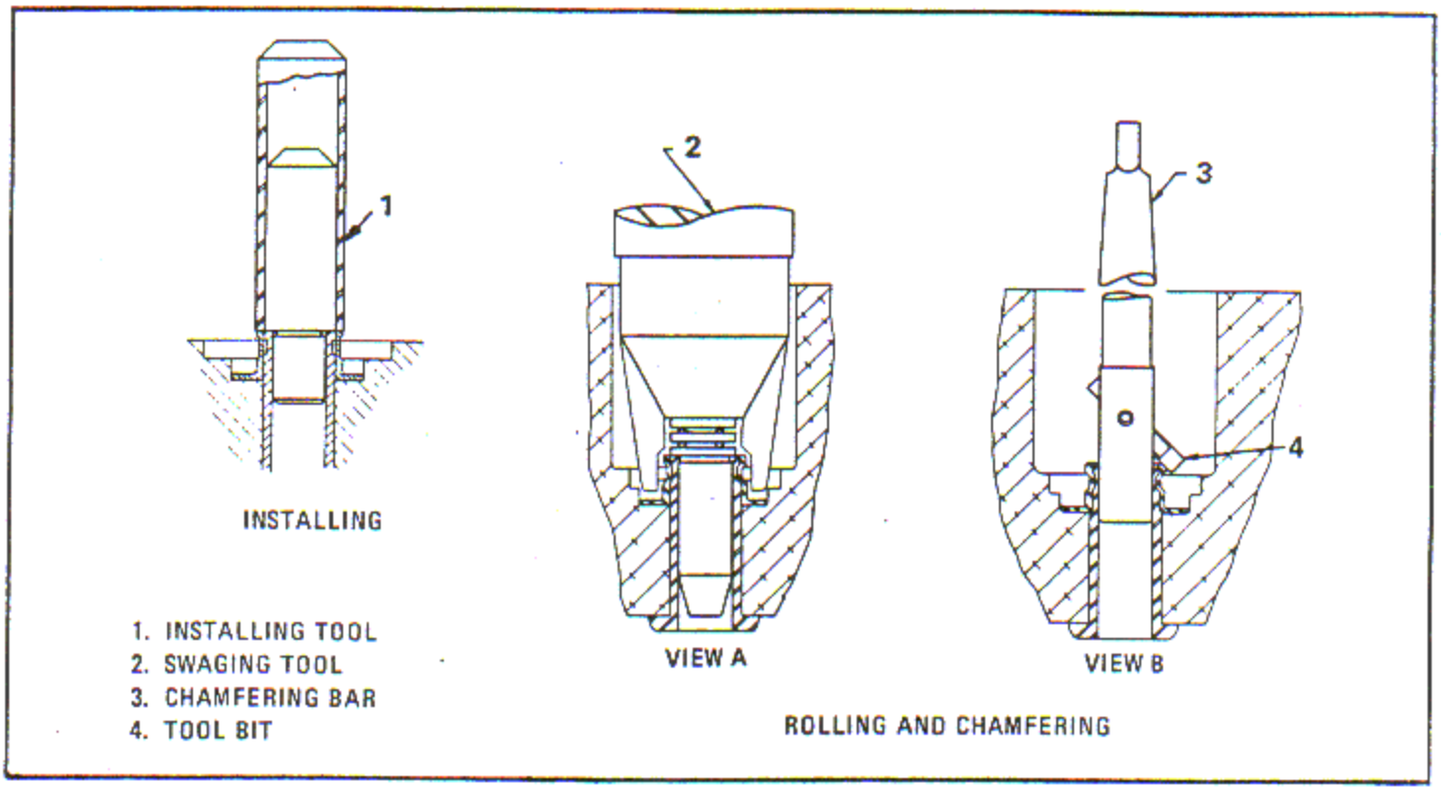

Figure 6-150. Installing, Rolling and Chamfering Exhaust Guide Retainer Sleeve

6-484. Roll Exhaust Guide Retainer Sleeve to Guide.

a. Place the cylinder with fixture on a drill press table.

b. Level the top of the sleeve with a machinist's level, rotating the cylinder in the fixture or turning the fixture jackscrew so that this face is accurately square with the drill press spindle. Clamp the cylinder securely to the fixture.

c. Install swaging tool (2, figure 6-150) in the drill press spindle. Set the swaging tool using the master set sleeve, detail 24 of the swaging tool. Position the stop and lock it. Align the swaging tool pilot in the ID of the valve guide and secure the fixture to the drill press table.

d. Roll the retainer sleeve into the groove of the valve guide using a spindle speed of 150 rpm, a light hand feed and a liberal flow of engine oil for lubricating the rollers and pilot. See figure 6-150, view A. Do not disturb the cylinder set-up.

e. Check the groove of the retainer sleeve with snap gage to ensure that the sleeve is properly imbedded in the valve guide groove.

f. Install chamfering bar (3) with tool bit (4) in a drill press spindle. Machine a 0.020 - 0.040 x 43 - 47 degree chamfer at the sleeve end. See view B, figure 6-150.

g. Break all sharp edges to a 0.010 - 0.030 inch radius.

6-485. Ream Exhaust Guide and Grind Seat.

a. Ream exhaust valve guide to a 0.7485 - 0.7495 or a 0.7505 - 0.7515 inch diameter as necessary to provide the proper clearance with the valve to be installed. The surface finish shall be 60 microinches rms or better.

b. Remove the feathered edge at the flange end of the guide ID using standard procedure. Do not

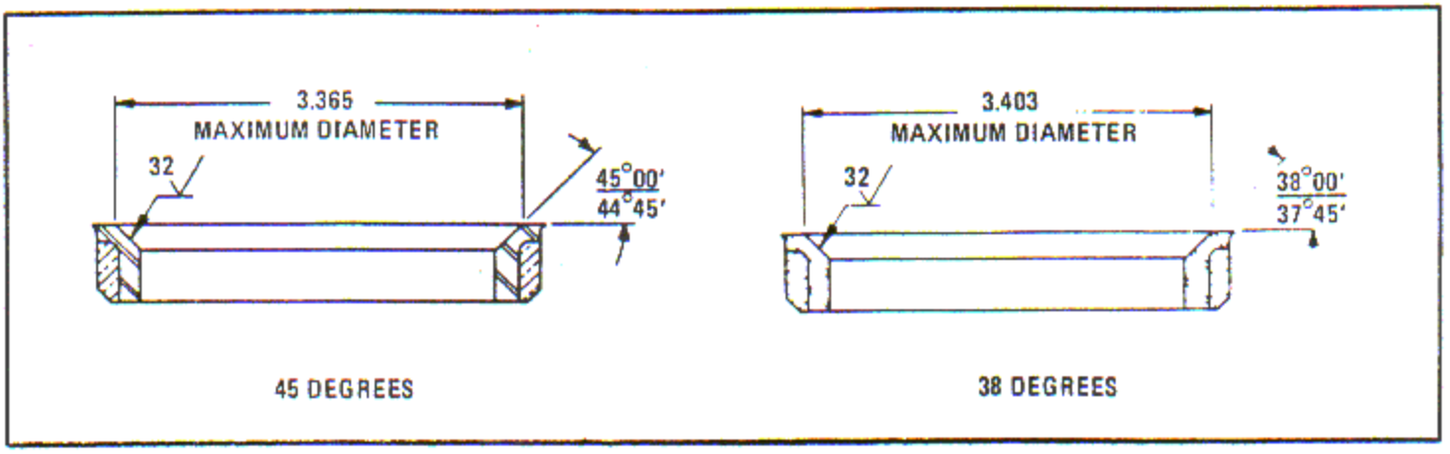

Figure 6-151. Exhaust Valve Seat Grinding Limits (45 Degrees and 38 Degrees)

exceed a 0.005 inch maximum radius since a sharp edge is desired.

c. Check the reamed hole size using plug gage for the larger hole or a locally manufactured gage for checking the smaller hole as appropriate.

NOTE

This gage can be constructed similarly to the C-W gage used for checking the 0.7505 - 0.7515 hole.

d. Grind the valve seat face to the angle shown in figure 6-151, as applicable, using valve seat grinding machine (Model No. 50, Wadell Equipment Company, 150 Terminal Ave., Clark, N.J., or Model G1, Comp Air Inc., 1121 San Mateo Ave., San Bruno, California). Obtain a 32 microinch rms or better surface finish. Refer to the manufacturer's instructions.

e. Check the valve seat face angle with bluing gage for 38 degree seat angle and bluing gage for 45 degree seat angle. The transfer of blue for the full width of the ground surface of the seat indicates proper face angle. It is also desirable to have 360 degrees of bluing contact which indicates circularity.

f. Check the concentricity relationship of the seat face to the guide ID using concentricity gage to ensure that the maximum limit of 0.002 inch full indicator reading is not exceeded.

NOTE

Valve seats may be reground to the dimensions shown in figure 6-151. Check the reground surface with appropriate limit gage for 38 degree seats and limit gage for 45 degree seats. The seat must be replaced when the gage no longer rests on the angular surface. Check the seat for concentricity and angle as shown.

g. Pressure test the cylinder in accordance with paragraph 6-497.

6-486. EXHAUST VALVE GUIDE REPLACEMENT WHEN SEAT IS NOT REPLACED. (See tool group 44.)

6-487. Remove Exhaust Guide.

a. Remove the exhaust guide retainer sleeve by drilling as directed in paragraph 6-474, steps a through d.

b. Continue to drill into the guide to a depth of 1-1/2 inches. Remove any loose or hanging material.

c. Drift the remaining portion of the guide from the cylinder using punch.

6-488. Exhaust Valve Guide Replacement by Alternate Method. Removal of the exhaust valve guide during cylinder head rework may be performed without the need for machining operations as follows:

CAUTION

Maintain the contact end of the drift in good condition i.e. flat and square with the pilot shank. Tapered wear from continued use can cause flaring of the upper end of the guide and make removal more difficult.

a. Use a suitable steel drift bar incorporating a pilot to enter the upper end of the exhause valve guide.

b. Drive out the exhaust guide which will shear the retainer without damaging the cylinder head.

c. Perform operations incidental to oversize boring and valve guide replacement in accordance with standard practice.

6-489. Exhaust Valve Guide, Aluminum Backed, Removal.

a. Prepare and heat the cylinder to 288 - 316°C (550 - 600° F) and remove the guide using water cooled valve guide remover.

NOTE

Aluminum backed guides cannot be driven out cold as with non-coated guides. The cylinder must be heated sufficiently hot and the guide must be chilled.

6-490. Bore Exhaust Guide Boss Hole for Oversize Guide. Proceed as instructed in paragraph 6-476.

6-491. Back Spotface and Chamfer Bottom of Valve Guide Boss.

a. Clamp the cylinder loosely in fixture on the table of a suitable drill press.

b. Slide a spacer on the proper size dummy guide. Refer to the list of guide sizes in paragraph 6-476. Install the guide, with the spacer under its flange, in the guide boss hole from the rocker box end.

c. Level the top of the guide, with a machinist's level, by rotating the cylinder in the fixture or turning the fixture jackscrew until the guide top is square with drill press spindle. Clamp the cylinder securely to the fixture.

d. Align the dummy guide hole with the drill press spindle. Then clamp the fixture securely to the drill press table.

e. Assemble proper size facing cutter to bar. Refer to paragraph 6-477, step n, for cutter sizes. Pass the bar up through the guide into the drill press chuck.

f. Back spotface the valve guide boss only enough to clean up. Cut a 43 - 47 degree chamfer at the bottom of the guide hole. See figure 6-146, view B.

g. Remove facing bar, dummy guide and spacer. Check the boss length with checking gage. The gage must pass snugly or not at all over the ends of the boss hole. If the gage fits loosely over the ends of the hole, reject the cylinder.

6-492. Machine Guide Prior to Installation. Proceed as instructed in paragraph 6-479.

6-493. Install Valve Guide.

a. Place the valve guide on installing arbor and chill in accordance with standard practice.

b. Prepare the cylinder for heating in accordance with paragraph 6-475. Heat to 232 - 260°C (450 - 500° F) to install noncoated guides. Heat to 288 - 316°C (550 - 600° F) to install aluminum backed guides.

CAUTION

Do not attempt to seat or reseat the guide by impacting due to the possibility of fracturing the guide flange.

c. Remove the cylinder from the holder or oven and rest it head down on an asbestos lined bench

top. Quickly remove the holder from the exhaust position and insert the guide with the installing arbor.

d. Retain the guide in this position by pressing against the arbor momentarily to permit the temperature to equalize.

e. Check to ensure the exhaust valve seat has not shifted in its recess and reinstall the valve seat and guide holder with a locally fabricated spacer while the cylinder is cooling. If inspection reveals the seat has shifted in its recess, the seat must be replaced. No attempt should be made to bottom the seat.

f. After the cylinder has cooled to room temperature remove the holders from the head. Check the clearance between the guide flange and cylinder boss. The clearance must not exceed 0.005 inch. If the clearance is excessive, remove the guide in accordance with paragraph 6-475. Inspect the boss hole and guide for damage. If

6-494. Install Exhaust Guide Retainer Sleeve. Install the sleeve as instructed in paragraph 6-482.

6-495. Roll Exhaust Guide Retainer Sleeve to Guide. Roll the sleeve as instructed in paragraph 6-484. Ream exhaust guide and grind seat as instructed in paragraph 6-485.

6-496. VALVE RECONDITIONING.

a. Clean carbon from the surface of valves. Do not remove the engine varnish which has impregnated the surface of the steel causing the familiar dark stain. This varnish improves the wearing characteristics of stem. Its removal at any point will require the undesirable removal of metal also.

b. Polish OD of valve head and blend it into crown with a 0.120 inch radius. Raised edges of permissible nicks or dents on the dome shall be stoned smooth and sharp edges rounded.

c. Remove pits in valve stems using emery cloth, Federal Specification P-C-451, followed by crocus cloth, Federal Specification P-C-458, and oil. Do not exceed service limits. Rework neck and throat areas to maintain a finish of 125 microinch rms or better.

d. Reject intake valves with nicked stems. Use dent limits given in paragraph 6-134, which also defines nicks and dents.

e. Clean up the faces of intake and exhaust valves using suitable grinding equipment. A dented or pounded valve face should have only enough material removed to true up the valve face angle and to eliminate any lip that may have formed due to face pounding. No attempt should be made to grind out all dents. However, no individual dent having a diameter exceeding 0.125 inch should remain. After valve face grinding, a relatively sharp corner exists at the intersection of the face and the periphery. Remove this corner by breaking to a 0.030 inch radius.

f. Grind valve tips only when a marked roller impression of measurable depth is present or when pits or spalled out areas exceeding 0.015 inch in diameter and/or length occur.

g. Check intake and exhaust valves using proper regrind limit gages to determine if regrind limits of valve face and tip have been exceeded. See figure 6-152.

h. Check the face angle of valves using bluing gage for intake valves and bluing gage for exhaust valves. Refer to paragraph 6-133, step r.

NOTE

The valve face angle is measured from a line perpendicular to the center of the valve stem as shown in figure 6-153.

i. Check concentricity of the valve face and stem. Support the stem at its extremities in "V" blocks. Indicate the OD of the stem and face by rotating the valve. The valve stem must run true. The stem and face must be concentric within 0.002 inch full indicator reading.

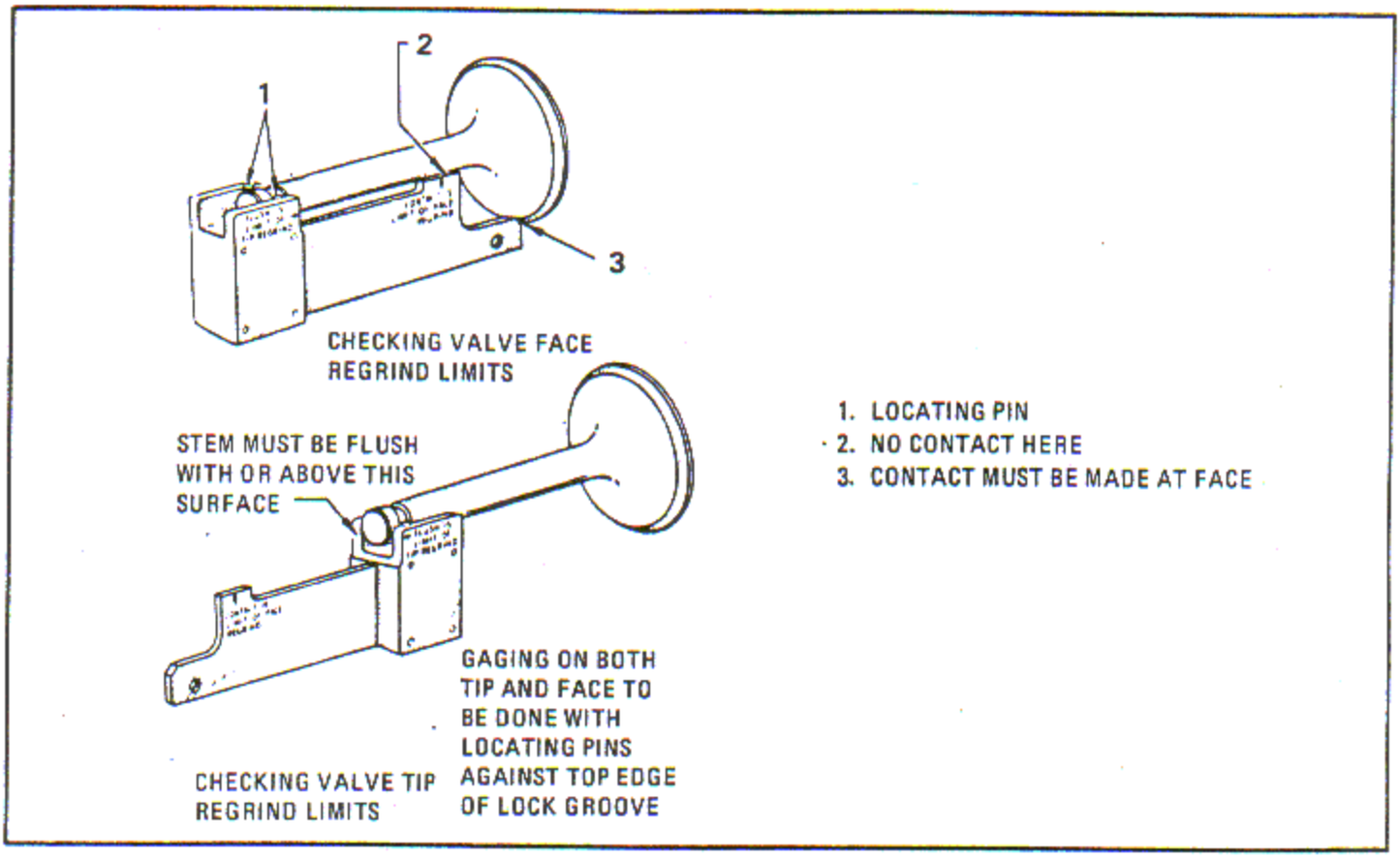

Figure 6-152. Valve Face and Tip Regrind Limits

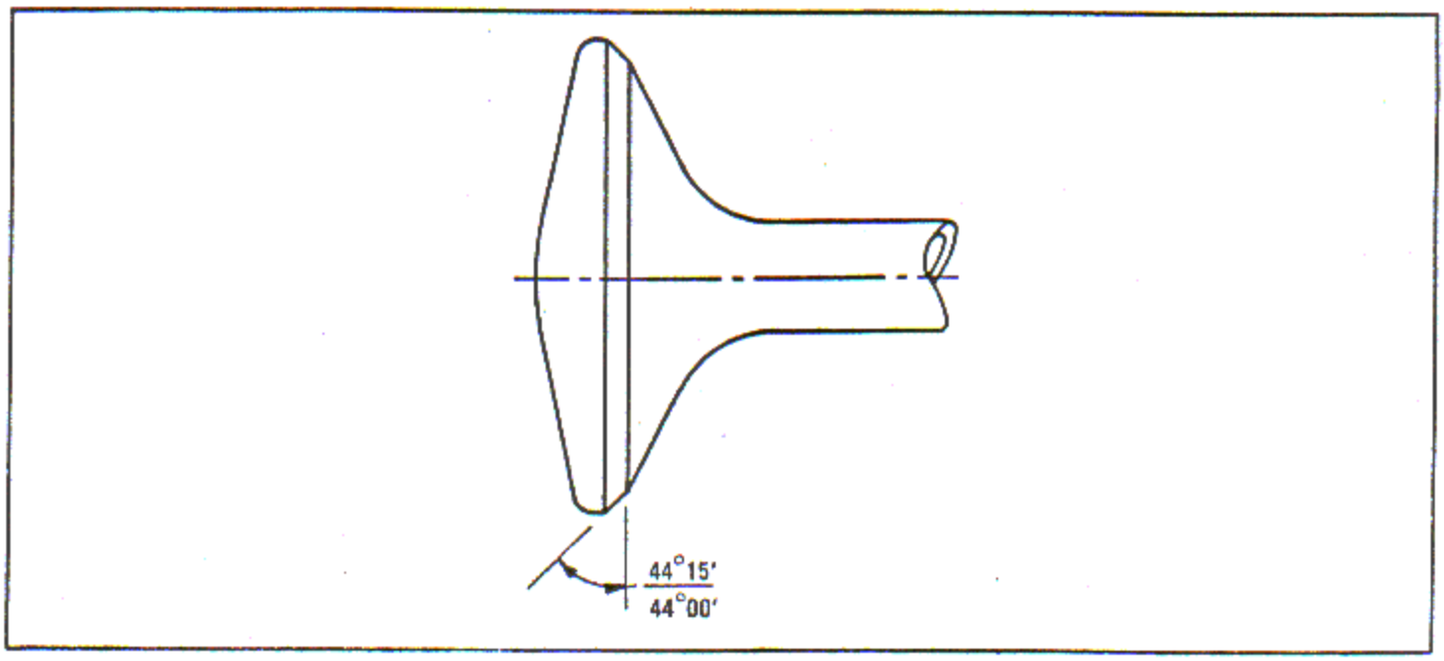

Figure 6-153. Valve Face Angle

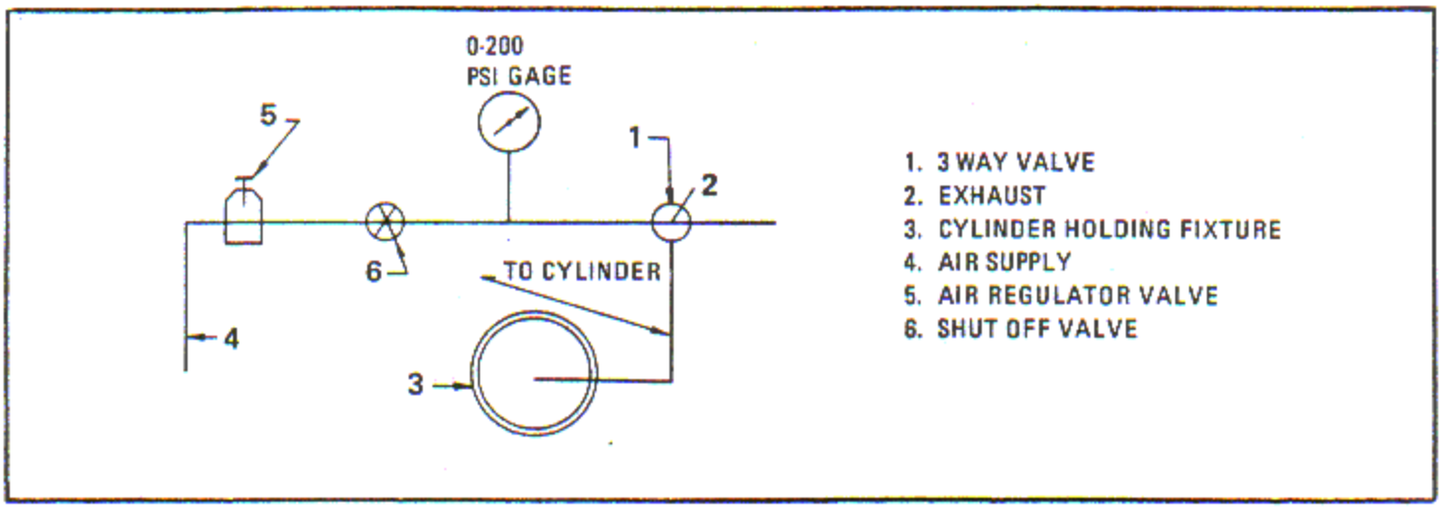

Figure 6-154. Cylinder Valve Seat Pressure Test by Time Pressure Drop

j. All intake and exhaust valve spring upper washer split locks shall be inspected for sharp edges. The locks should be split on the score marks provided and all sharp edges removed.

NOTE

Ensure that the sharp edges are removed from the locks prior to installation, at cylinder assembly.

6-497. CYLINDER VALVE SEAT PRESSURE TEST.

6-498. General.

a. A pressure test of cylinders prior to installation assists in verification of correctly installed and ground new seats and valves or determines suitability of used seats for continued service.

b. Prior to pressure testing cylinders, thoroughly wash the cylinder as the presence of any foreign particles can cause erroneous readings and/or damage to the valve seat faces.

c. Install the intake and exhaust valves, springs, washers and locks. Place two dummy spark plugs in the spark plug holes.

d. Perform a pressure test in accordance with paragraph 6-499 or 6-500.

6-499. Time Pressure Drop Method.

a. Clamp the cylinder in a suitable locally fabricated holding fixture (3, figure 6-154), utilizing a positive seal at the flange end.

b. Apply 80 psi pressure in the cylinder. Cut off the air supply and observe the pressure drop. Pressure drop must not exceed 5 psi during the first 15 seconds.

NOTE

If any pressure drop occurs, the external surface at the cylinder head to barrel location shall be checked for leaks by spraying the area with leak detector, MIL-L-25567C or a suitable substitute. No leakage is permissible.

6-500. Differential Pressure Drop Method.

a. Clamp the cylinder with a positive seal under the flange in fixture. Set the air regulator valve (5, figure 6-155) to 80 psi on the gage (8), with the valve (2) on the by-pass line (4) open.

b. Close the valve (2) on the by-pass line (4) and observe the pressure on the second gage (9). Pressure on the second gage must not drop below a minimum of 73 psi.

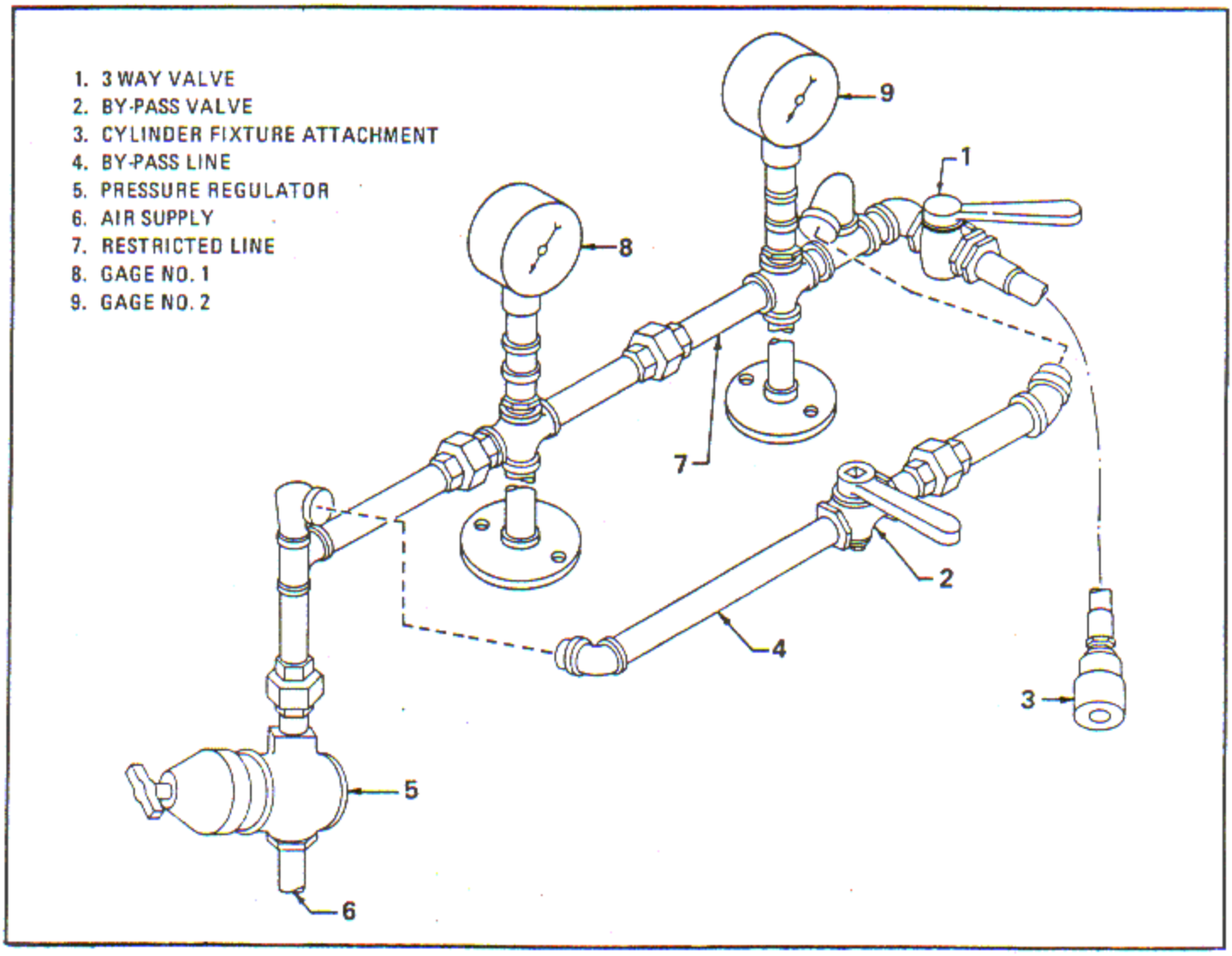

Figure 6-155. Cylinder Valve Seat Pressure Test by Differential Pressure Drop

6-501. Cylinder Leakage.

a. If the minimum limits cannot be maintained when using either method, tap the valve with a 3/4 pound maximum rawhide mallet to center the valve in relation to the seat.

b. Cylinders failing to pass the pressure test must have the leakage point determined and any discrepant component reconditioned or replaced as necessary to permit the cylinder to pass the pressure test.

6-502. CYLINDER HYDRAULIC PRESSURE TEST. All cylinder assemblies will be subjected to the following hydraulic test after assembling a barrel and head.

WARNING

For the safety of personnel, it is important that all air be bled out of the system, including the cylinder.

a. Close all openings in the cylinder head with appropriate dummy plugs.

NOTE

The plugs must close the openings, but they must not seal between the spark plug inserts or the valve seats and the cylinder head.

b. Clamp the cylinder to a suitably tilted test fixture which will permit one spark plug hole to

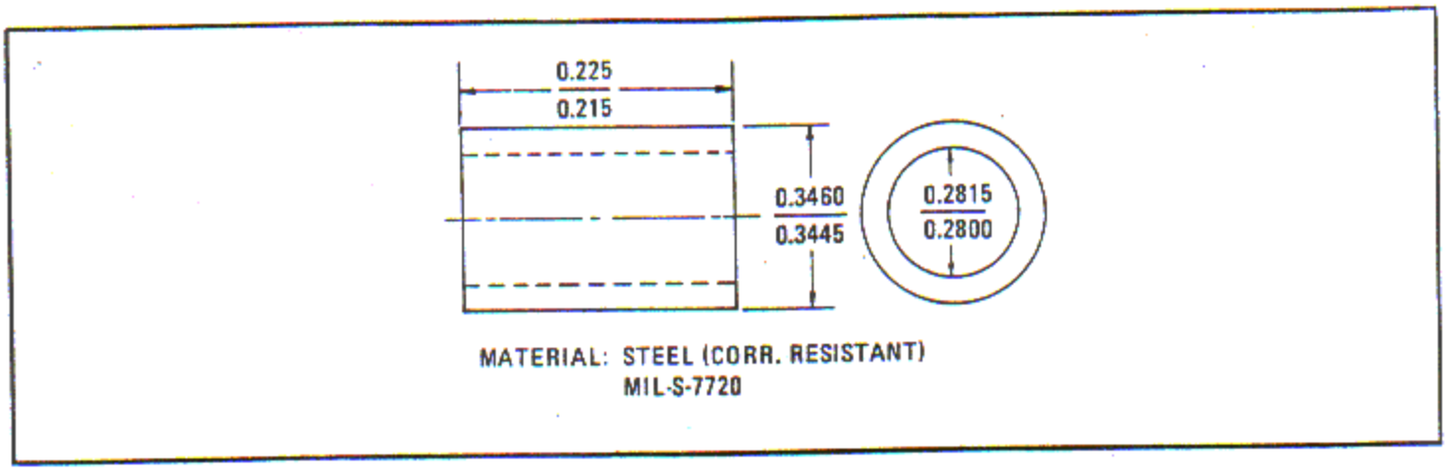

Figure 6-156. Bushing For Intercylinder Deflector Attaching Hole of Rocker Box Covers

be at the highest level. Hold the dummy spark plug (in the highest opening) off its seat while filling the cylinder with test fluid, blend No. 51. See paragraph 6-155. When liquid appears at the open spark plug hole, close the opening with the dummy plug.

c. Raise the pressure in the cylinder to 1000 psi and hold for three minutes, during which time, blow the cylinder exterior dry with air.

d. Observe external surfaces for leaks at the cylinder head to barrel location, around valve seats, and spark plug inserts. No leakage is permitted within the three minute interval.

e. Release fluid pressure and break the seal at a spark plug location. Allow liquid to drain from the cylinder.

f. Remove the cylinder from the fixture and remove all dummy plugs and dummy valves from the cylinder head.

g. Wash thoroughly in a suitable spray booth using cleaning solvent, Federal Specification P-S-661.

6-503. ROCKER BOX COVER - INTERCYLINDER DEFLECTOR ATTACHING HOLE, REWORK. Rocker box covers in which the intercylinder deflector attaching hole is elongated may be reworked as follows:

a. Where possible, ream the bolt hole to 0.343 - 0.344 inch and install bushing. See figure 6-156.

b. Covers having holes elongated to the extent that above rework is not possible may be reworked by heliarc welded in accordance with MIL-W-8604 (AER) using aluminum alloy welding rod QQ-R-566a, Class 4043 and re-machine to original dimensions.

6-504. ROCKER BOX COVER MATING SURFACE RECONDITIONING. Rocker box covers may be reconditioned by hand lapping or by the alternate method, belt sanding.

NOTE

Do not exceed the minimum flange thickness of 0.170 inch which is 0.030 inch below the minimum original part dimension of 0.200 inch.

a. Hand lap the cover using a medium grade of lapping compound. Keeping an even pressure on the cover, lap using a figure eight motion. Remove as little material as possible in order to clean up the mating surface.

b. Using a belt sander which will give a 100 rms grind surface finish, remove only enough material to bring the surface within tolerance. The grinding surface of the sander must be flat within 0.003 inch.

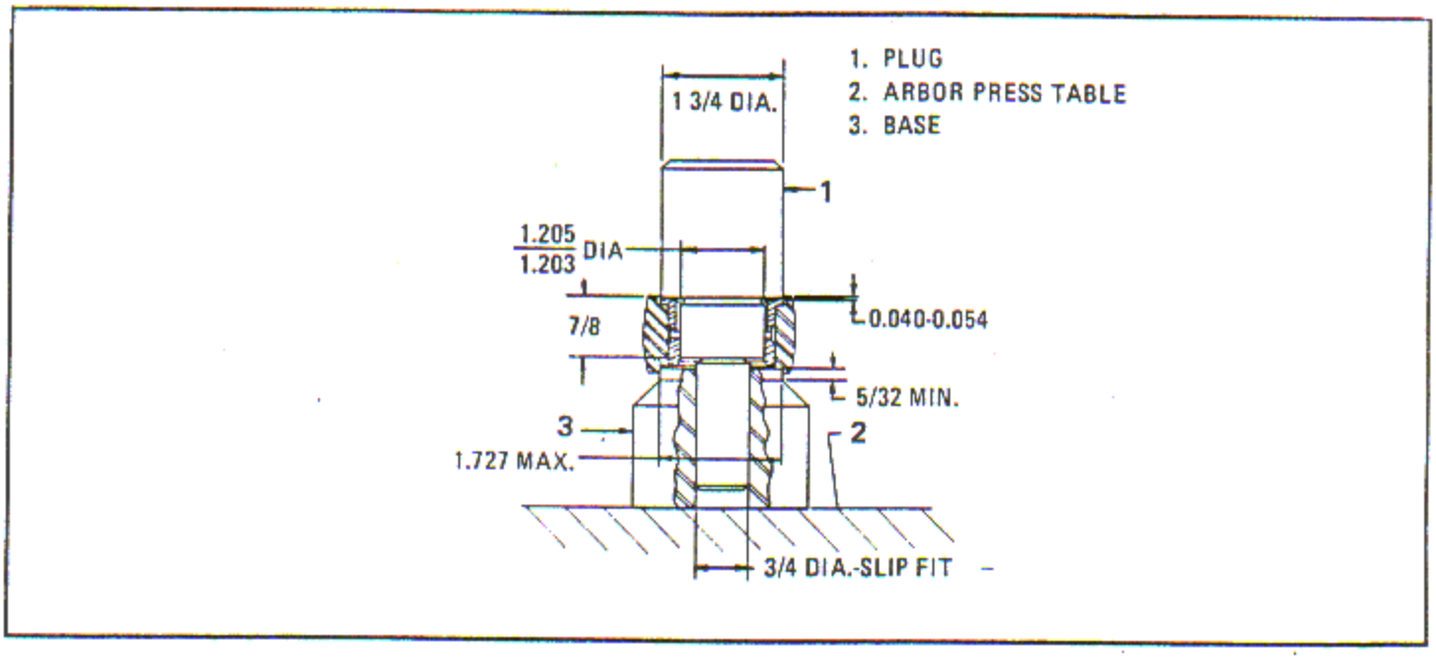

Figure 6-157. Install Bushing In Rocker Arm

6-505. ROCKER ARM PLAIN BUSHING REPLACEMENT - INTAKE AND EXHAUST VALVE.

6-506. Remove Rocker Arm Bushing. Press out bushing on a suitable arbor press using a locally fabricated plug and base.

6-507. Install Bushing in Rocker Arm.

a. Ensure parts are clean and free of burrs.

b. Immerse bushing in dry ice and alcohol or dry ice and gasoline and chill to -57°C (-70°F).

c. Place rocker arm, countersunk end of ID up (thrust side), on table of arbor press (2, figure 6-157).

d. Press bushing into rocker arm so that flange is fully seated in counterbore. Use a locally fabricated plug (1). Maintain pressure until bushing is tight in bore.

e. Do not mar flange face of bushing.

6-508. Finish Bore Rocker Arm Bushing ID.

a. Clamp fixture (3, figure 6-158) to faceplate of a suitable lathe and indicate surfaces A and B to run true within 0.0005 inch full indicator reading.

b. Plug all passages in rocker arm and bushing with beeswax, Federal Specification C-B-191 or paraffin, Federal Specification VV-W-95.

c. Install fixture bushing (2) in center hole of fixture (3).

NOTE

Ensure mating surfaces are clean.

d. Position rocker arm in fixture (3) with bushing flange facing out, and the push rod end of the rocker arm against the fixture stop pin (1). Align with fixture aligning plug (4) and clamp rocker arm securely in fixture. Withdraw fixture aligning plug.

e. Finish bore bushing ID to 1.2495 - 1.2505 inches diameter. Check with plug gage. Finished bore and X surface must be square within 0.002 inch full indicator reading. Surface finish on bore to be 13 microinches rms or better. Use a suitable boring bar with a tungsten carbide tool bit. Employ a high speed fine feed and a continuous flow of No. 960 cutting fluid. Refer to paragraph 6-197.

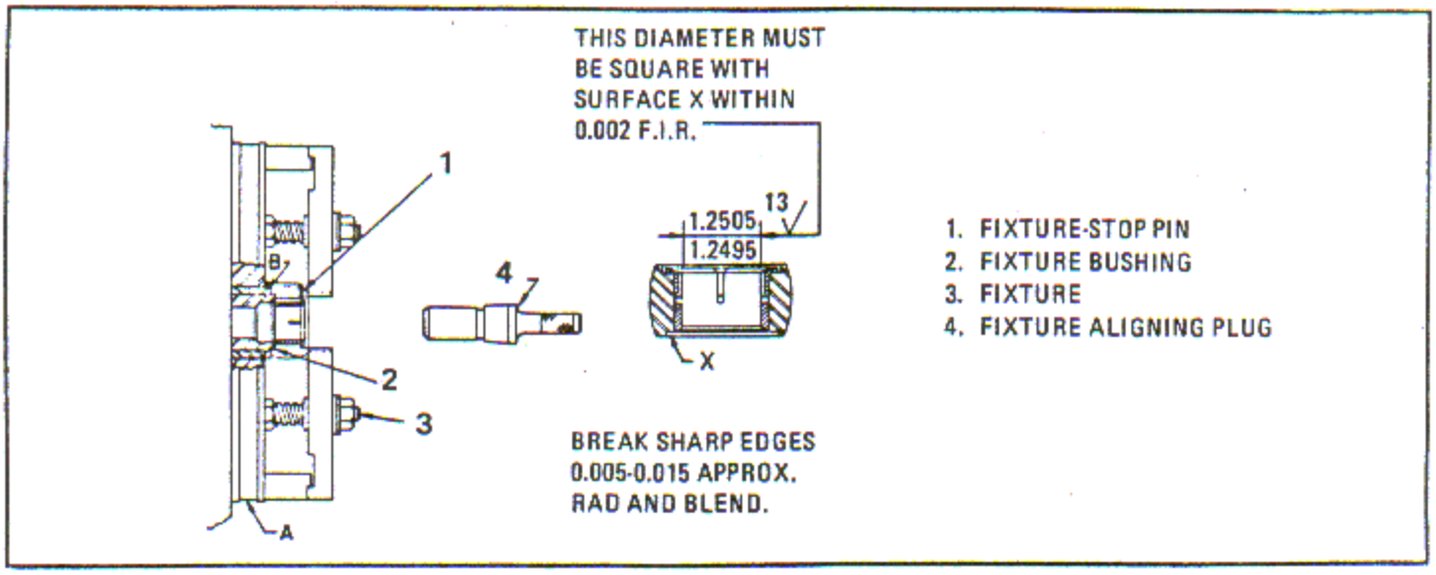

Figure 6-158. Finish Bore Bushing ID

f. Remove rocker arm from fixture and break all sharp edges 0.005 - 0.015 inch approximate radius and blend.

g. Dewax the rocker arm by heating to approximately 135°C (276°F) and flushing out the oil passages with petroleum solvent, Federal Specification P-D-680, heated to 49°C (120°F) maximum at approximately 20 psi pressure. Blow out oil passages with clean compressed air using needle nose air valve.

6-509. ROCKER HUB BOLT BUSHING REPLACEMENT. (See tool group 118.)

6-510. Remove Bushing from Bolt Head Side.

a. Place collar of puller (2, figure 6-159) between bushings as shown.

b. Insert puller arbor (1) through puller collar and bushing holes.

c. Assemble puller bushing (3) and nut (4) on arbor as shown. Using handle (5), tighten the puller nut until the bushing is removed.

6-511. Remove Bushing from Nut End Side.

a. Place collar of puller (2, figure 6-159) against opposite bushing.

b. Insert puller arbor (1) through bushing (3), collar, cylinder hole and through puller sleeve (6) as shown.

c. Assemble puller and puller nut (4) on arbor as shown. Using handle (5), tighten the puller nut until the bushing is removed.

6-512. Ream Cylinder For Oversize Bushings.

NOTE

Omit this operation if the bore is not scored or damaged.

a. Ream through both bushing holes to obtain proper diameter as shown in figure 6-160. Use the proper reamer A through D (2) and the applicable gage A through D (1), according to the list following step b.

b. Do not back out reamer.

Oversize	Diameter C
0.005 in.	0.6915 - 0.6925 in.
0.010 in.	0.6965 - 0.6975 in.
0.020 in.	0.7065 - 0.7075 in.
0.030 in.	0.7165 - 0.7175 in.

6-513. Install New Bushing in Bolt Head Side.

a. Place collar of puller (4, figure 6-161) in new bushing as shown.

b. Assemble puller washer (2) with spherical side toward cylinder.

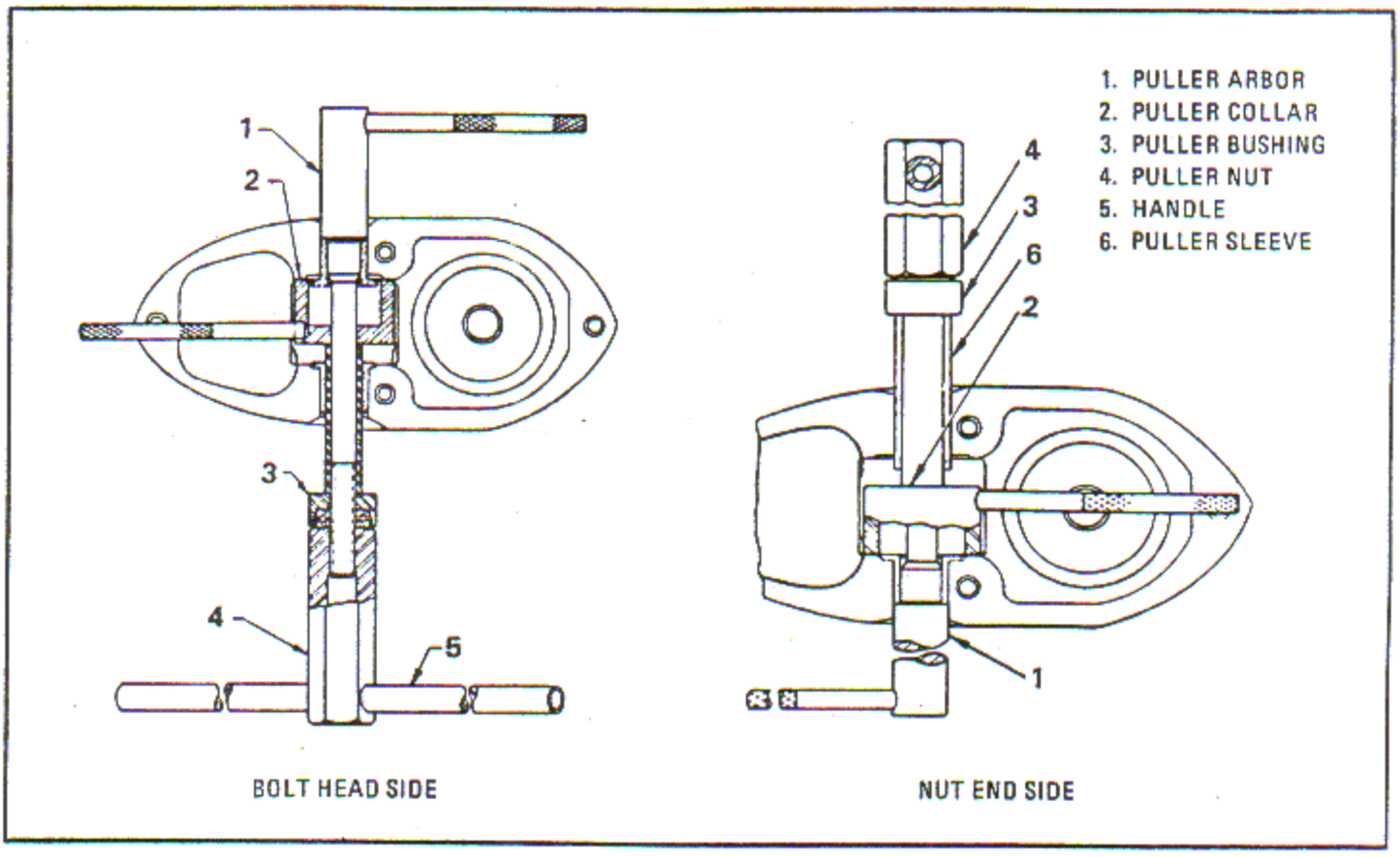

Figure 6-159. Removing Bushing from Bolt Head and Nut End Sides

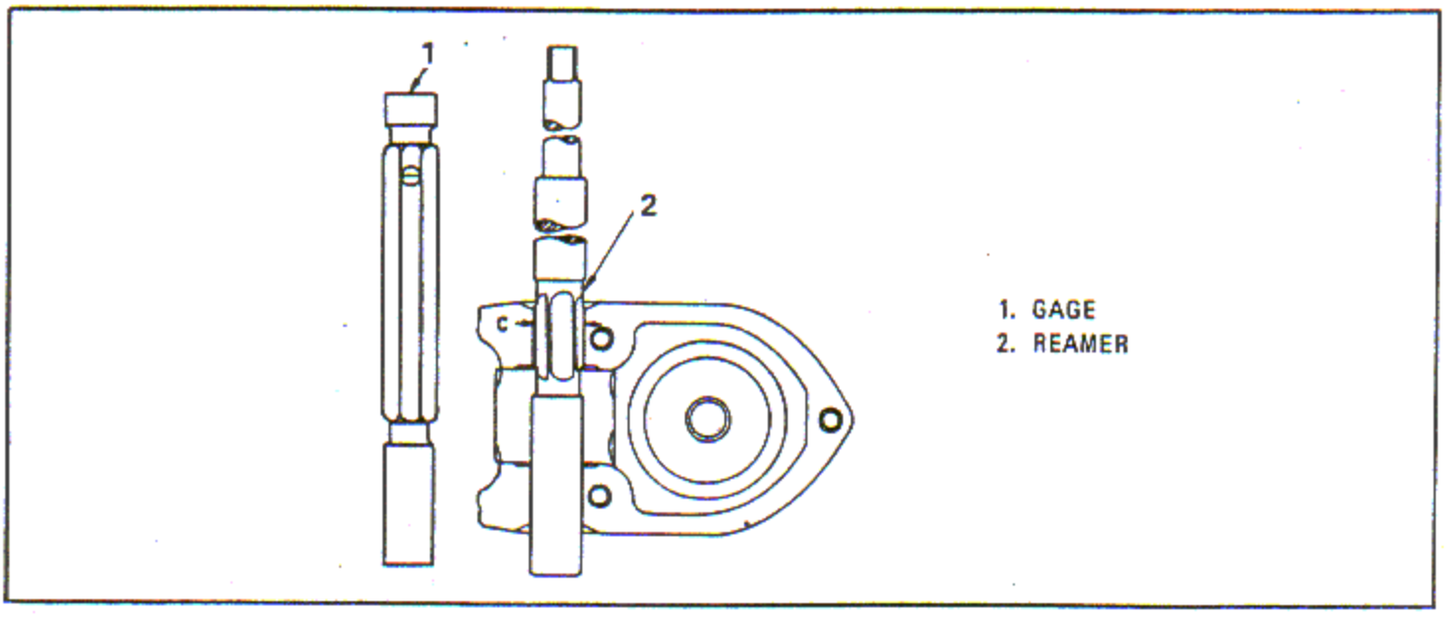

Figure 6-160. Reaming Cylinder for Oversize Bushing

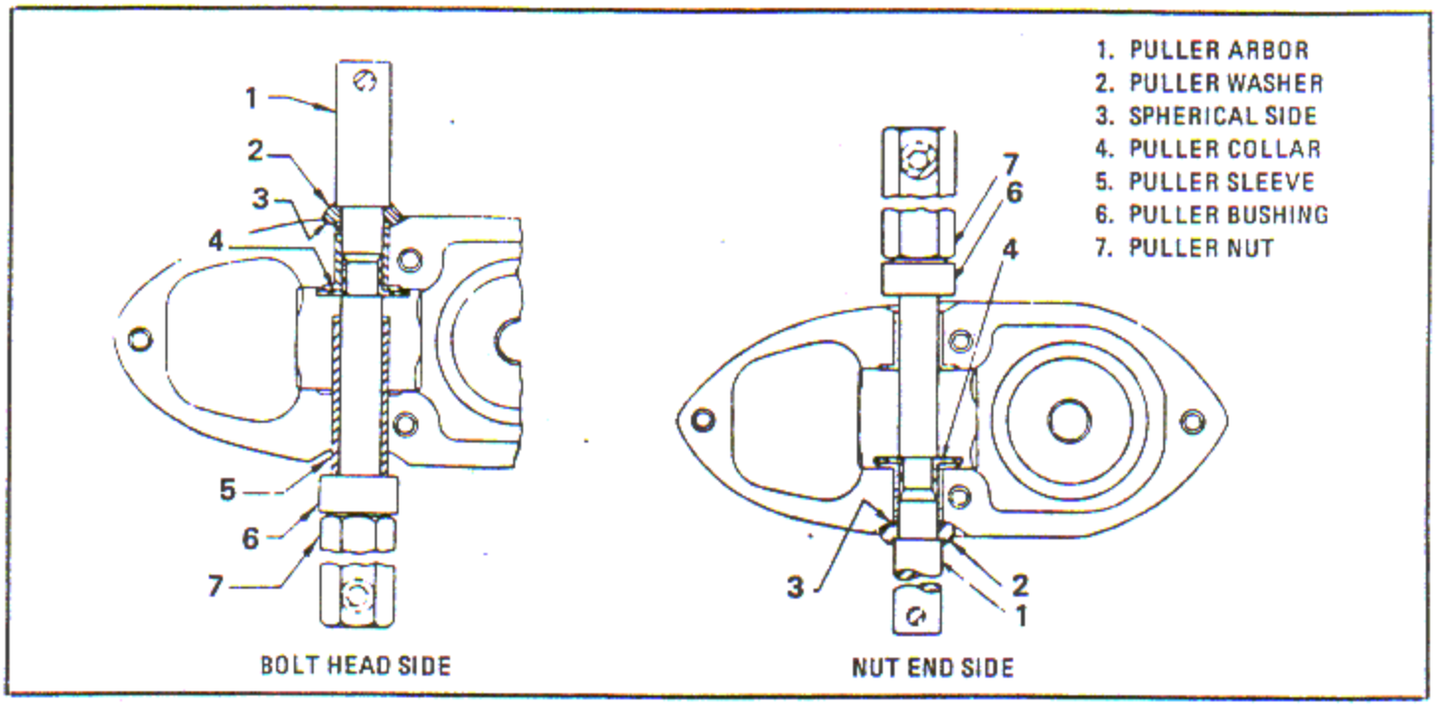

Figure 6-161. Installing New Bushing in Bolt Head and Nut End Sides

c. Insert puller bushing (6) with puller sleeve (5) through bushing hole on opposite side and assemble puller nut (7) on arbor. Turn puller nut until bushing flange is seated tight in cylinder counterbore.

d. Check with a 0.0015 inch feeler gage to ensure bushing flange is seated against the rocker box.

6-514. Install New Bushing in Nut End Side.

a. Place collar of puller (4, figure 6-161) in new bushing on nut end side.

b. Assemble puller washer (2) on puller arbor (1) as shown. Use spherical side of washer toward cylinder.

c. Insert puller bushing (6) on bolt head side and turn puller handle until bushing flange is seated tight in cylinder counterbore. Check with a 0.0015 inch feeler gage to ensure the bushing flange is seated against the rocker box.

6-515. Hand Line Ream Bushing Holes.

a. Using reamer E (1, figure 6-162), ream through both bushing holes to diameter D (2), which is 0.5653 - 0.5655 inch. Do not back out reamer. Check holes with plug gage.

6-516. Face Bushing Flange (Bolt Head Side).

a. Place the washer of puller (3, figure 6-163) in the bore of the cylinder as shown. Insert the bar (2) of cutter and bar through the bushings and the cutter (8). Tighten the cutter lockscrew (9).

b. Face bushing flange, feeding cutter (8) by turning nut (1). Remove only enough metal to allow a 0.010 inch feeler gage (6) to enter freely between the Go diameter of proper plugs, A and B (7) and plate (4), the locating plug being inserted in valve guide stem hole. This locating plate together with plate shim (5) is clamped between cutter edges and bushing flange face by means of nut. The 0.010 inch feeler gage must not enter between the No-Go diameter and the locating plate.

6-517. Face Bushing Flange (Nut End Side).

a. Face flange of opposite bushing to dimension E which is 1.2475 - 1.2515 inches using cutter (8, figure 6-163) and bar (2), washer of puller (3) and nut (1) as shown.

b. Check with gage E. Break all sharp corners.

6-518. Counterbore Rocker Hub Bolt Bushing.

a. Assemble cutter A (6, figure 6-164), pilot (3) and nut, and holder (4). Bore out end of

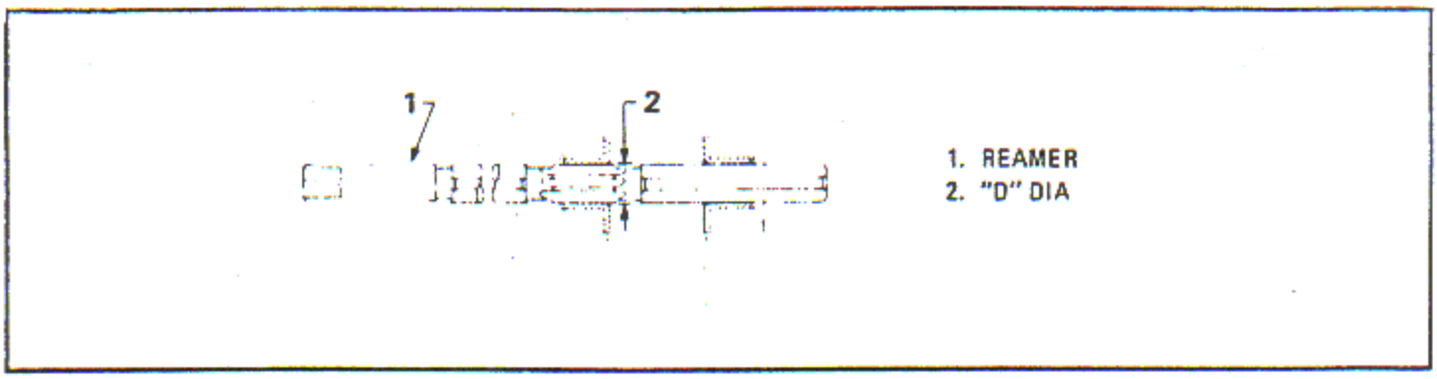

Figure 6-162. Hand Line Reaming Bushing Holes

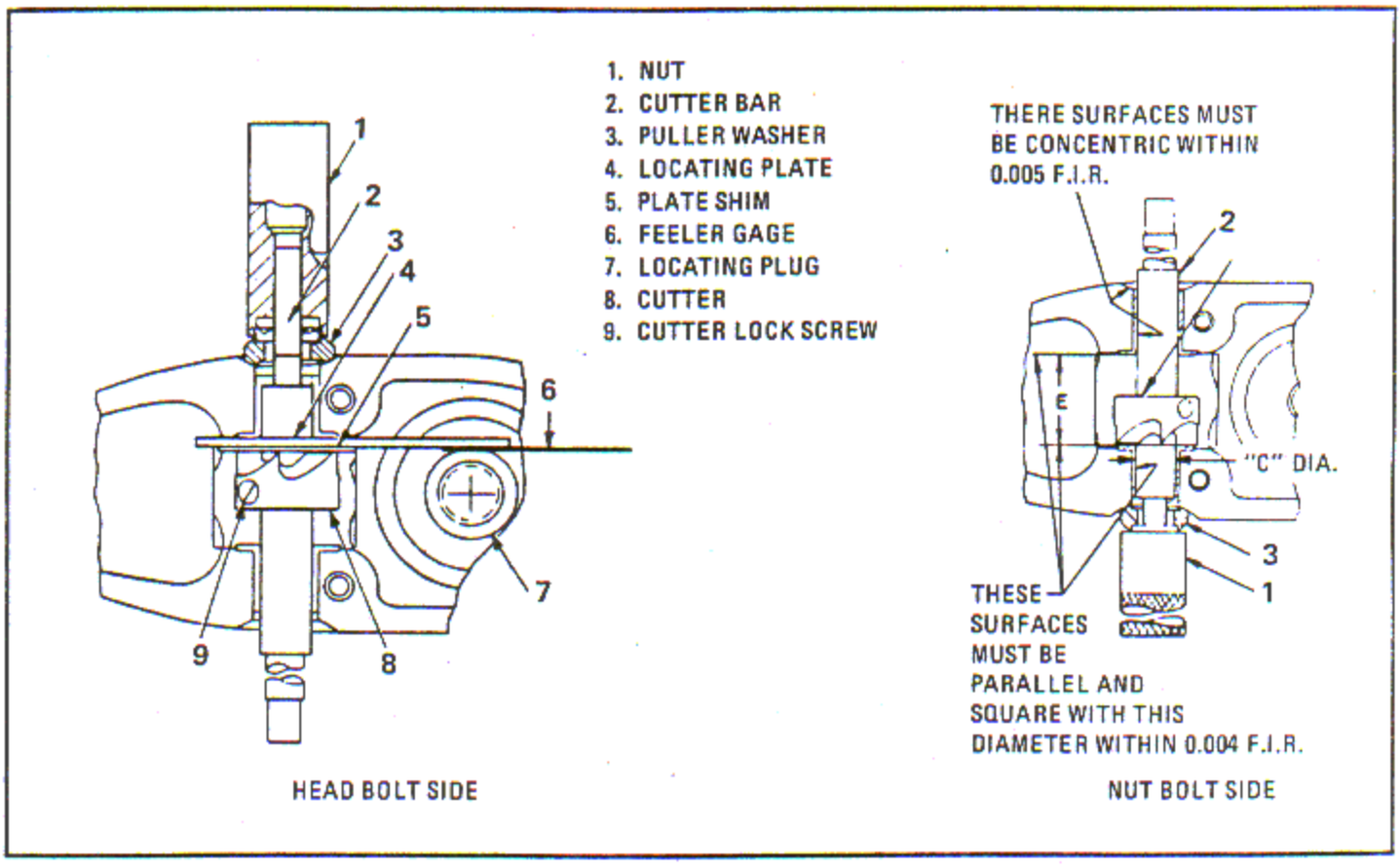

Figure 6-163. Face Bushings Flange in Bolt Head and Nut End Sides

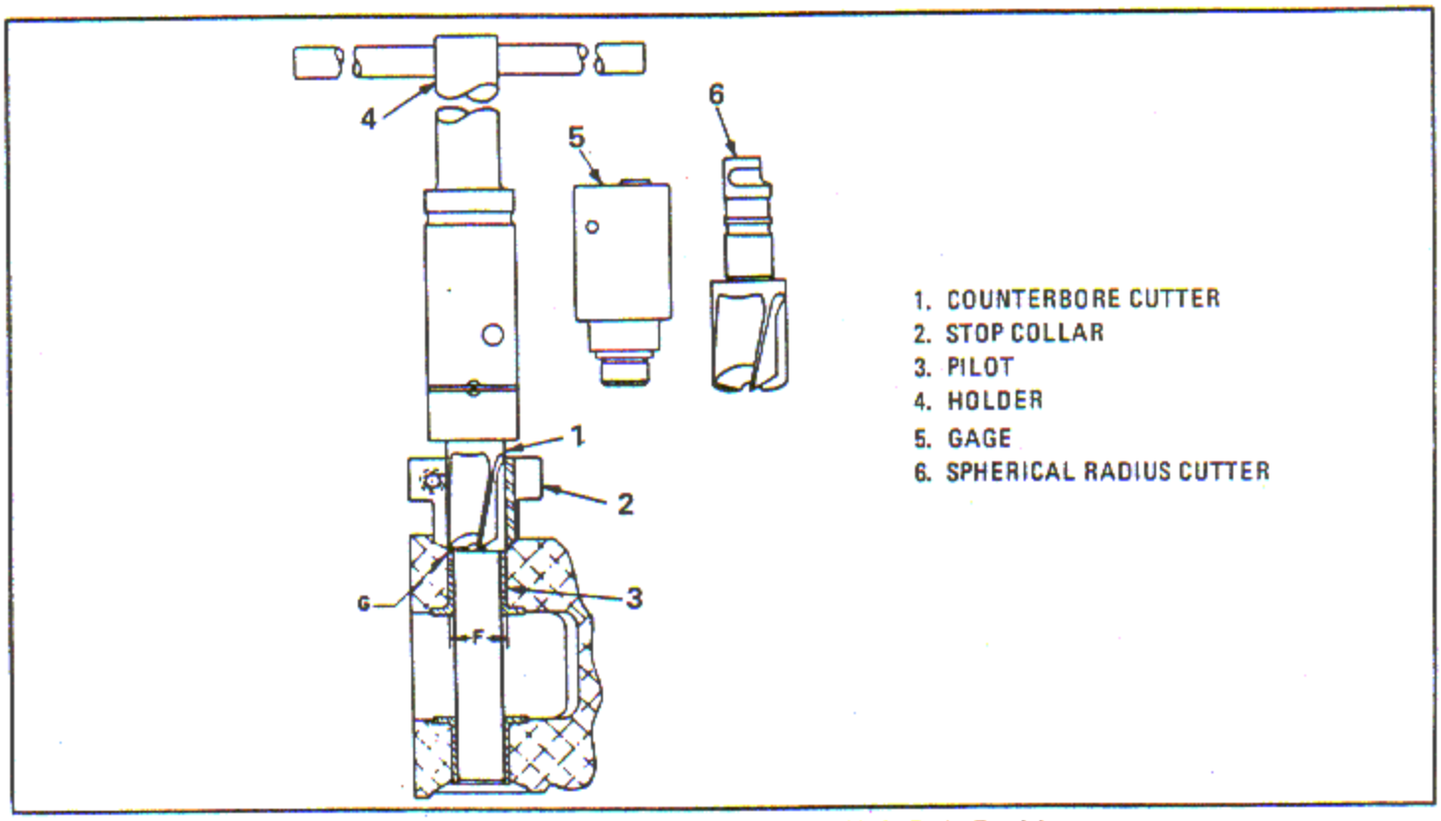

Figure 6-164. Counterboring Rocker Hub Bolt Bushing

bushing to diameter F which is 0.692 - 0.696 inch and to radius G which is 0.020 - 0.030 inch. Take light cut, checking frequently with gage F (5).

b. When correct depth has been obtained, assemble collar (2, figure 6-164) on cutter (6) as shown. Insert cutter in work to full depth of cut and clamp stop-collar securely to ensure correct depth on succeeding cuts.

c. In case of large oversize bushings, a thin shell of the bushing outer wall will remain. To remove this shell, assemble cutter B with pilot and nut and holder. Cut bushing flush with spherical surface, being careful not to remove any metal from rocker box. Repeat this operation on opposite bushing.

6-519. ROCKER ARM ASSEMBLY REWORK.

NOTE

Rocker arm assemblies, P/N 428403 and 428414 should be reworked to provide a 60 degree chamfer relief to 0.900 inch diameter on the thrust side of the intake and exhaust rocker arm assemblies. See figure 6-165. Rocker arm faces shall be ground in accordance with following paragraph for use with new steel thrust washer.

6-520. Rocker Arm Reconditioning.

a. If necessary, grind thrust hub face of rocker arm sufficiently to remove wear steps, corrosion pitting and surface defects. Thrust hub face surface shall be parallel to anti-thrust hub face within 0.002 inch and have a surface finish of 16 microinch rms or better.

b. Inspect for a minimum hub face to hub face dimension of 1.150 inches.

6-521. ROCKER ARM BUSHING REPLACEMENT (R1820-80 SERIES, -86A, -86B). (See tool group 119.)

6-522. Remove Bushing.

a. Plug all passages in the rocker arm with beeswax, Federal Specification C-B-191 or paraffin, Federal Specification VV-W-95.

b. Clamp fixture lightly to a lathe faceplate. Indicate surfaces A to run true within 0.005 inch full indicator reading. Secure the fixture to the lathe faceplate.

CARL SKINNER CO.
P. O. BOX 3555
VENTURA, CA 93006

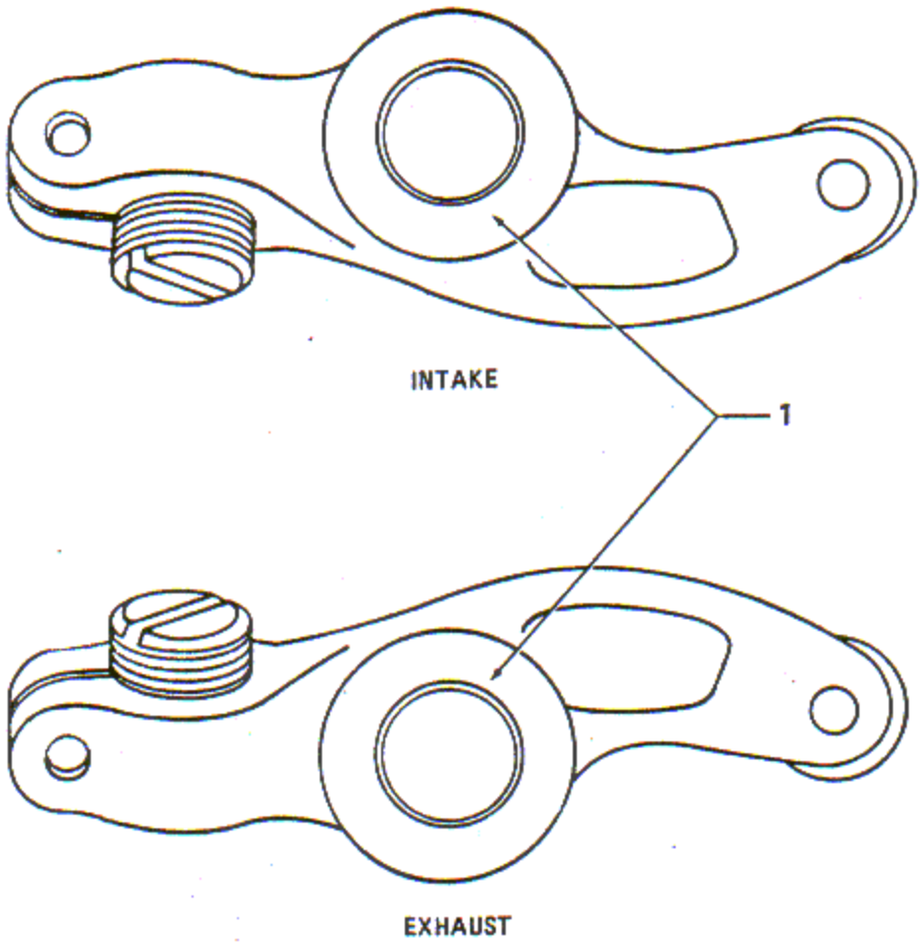

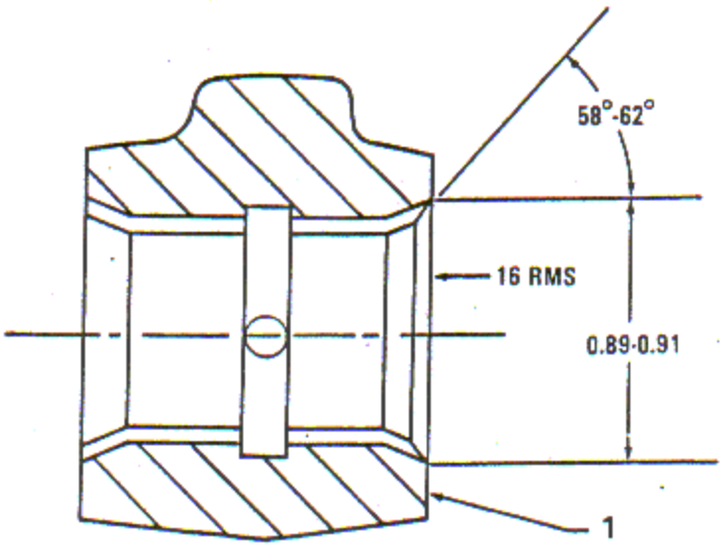

Figure 6-165. Rocker Arm Assembly Rework

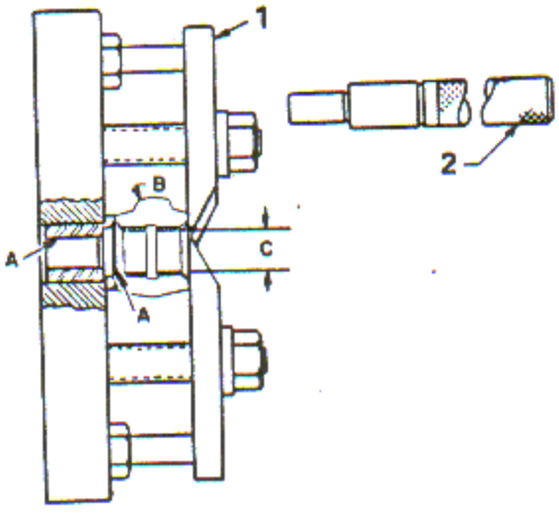

REMOVAL

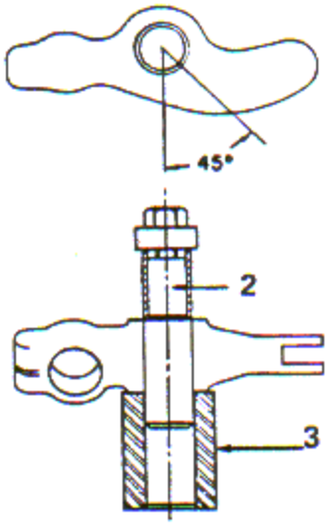

INSTALL BUSHING

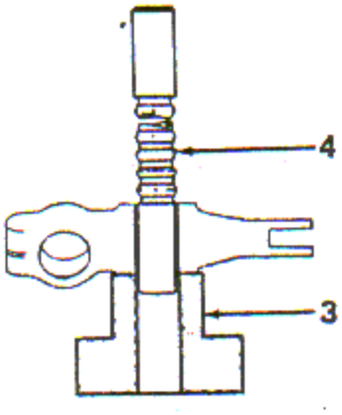

BURNISH BUSHING

1. FIXTURE
2. PLUG
3. COLLAR
4. BROACH
5. MAGIC CHUCK
6. SPINNING TOOL
7. BUSHING
8. HOLDER
9. CUTTER
10. PILOT AND NUT

Figure 6-166. Rocker Arm Bushing Replacement (Sheet 1 of 2)

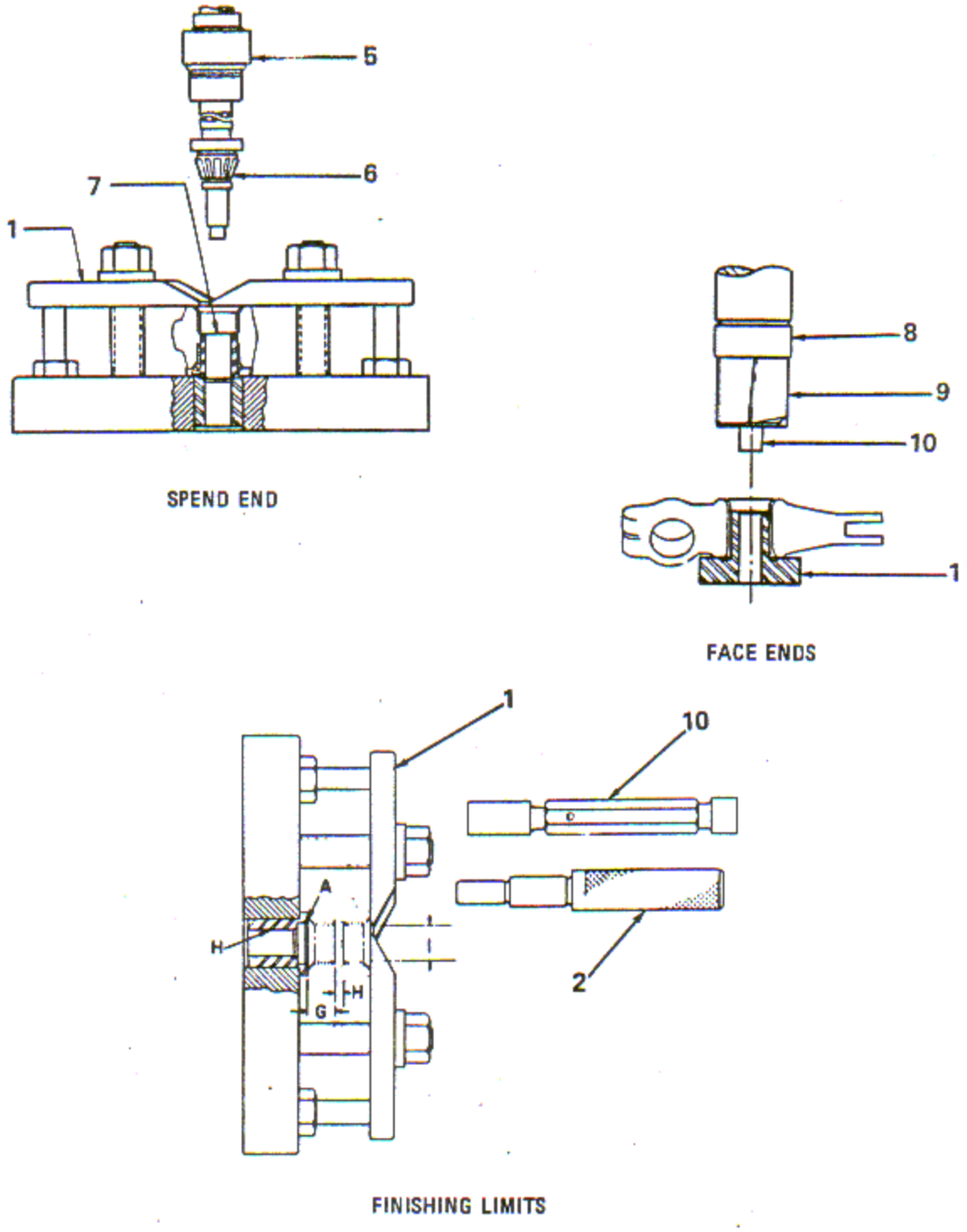

Figure 6-166. Rocker Arm Bushing Replacement (Sheet 2 of 2)

c. Place the rocker arm on the fixture (1, figure 6-166) and align the rocker arm with plug (2). Clamp the arm while pressing the top of arm B toward the center of the plug (2) so that the unworn portion of the bushing (7) contacts the plug. This is done so that the hole in the arm will run concentric.

d. Bore out the bushing to 0.810 inch maximum (diameter C). Check this dimension using a telescoping cage.

e. Remove the arm and pick out the remaining shell.

6-523. Install Bushing.

a. Place the bushing on plug (2, figure 6-166) of plug and collar (3), and secure finger tight with screw and washer.

b. Support the rocker arm using collar of plug and collar on a suitable arbor press table.

c. Press in the bushing until the washer rests on the face of the rocker arm hub.

6-524. Burnish Bushing.

a. Support the rocker arm by means of collar (3, figure 6-166) on a suitable arbor press table.

b. Burnish the bushing hole using broach (4) to 0.769 - 0.772 inch diameter. Check with plug gage.

6-525. Spin Ends of Bushing.

a. Place magnetic chuck No. 0 (5, figure 6-166) with spinning tool (6) in the drill press spindle as shown.

b. Align the bushing of fixture (1) with the spinning tool (6) and clamp fixture to the drill press table. Insert bushing (7) in fixture as shown. Clamp rocker arm on fixture.

c. Spin the end of the bushing (7) against countersink in rocker arm. Reverse the rocker arm on fixture (1) and repeat the foregoing operation.

d. An alternate method of seating bushings is by use of a suitable air press. A 7/8 inch hard steel ball is placed on each of two fixtures. One of the fixtures is attached to the table and the other to the arbor such that the two balls travel toward each other when the press is activated. The bushing is placed between the balls and 90 psi is applied to the press, thus seating the bushing in the countersinks of the rocker arm.

6-526. Face Ends of Bushing.

a. Place a suitable holder (8, figure 6-166, Cat. No. 2H-M2, Eclipse Counterbore Co., 1600 Bonner Ave., Detroit, Mich., or equivalent) with cutter (9) and pilot and nut (10) in a drill press spindle.

b. Place fixture (1) on the drill press table and locate the rocker arm on the fixture.

c. Face the end of the bushing flush with the end of the rocker arm.

d. Turn the rocker arm over on the fixture and face the other end of the bushing.

6-527. Sever and Finish Bore Bushings.

a. Clamp fixture (1, figure 6-166) lightly to a lathe faceplate.

b. Indicate surfaces A to run true within 0.0005 inch full indicator reading. Clamp the fixture tightly.

c. Align the rocker arm on the fixture (1) with plug (2), then clamp the rocker arm tightly to the fixture.

d. Using a suitable grooving tool, cut through the bushing as shown to a diameter of 0.840 - 0.860 inch. Grind the tool for corner radii of 0.010 - 0.030 inch. Start the groove at 0.501 - 0.511 inch from the face of the rocker arm (dimension G). The width of the groove (dimension H) is to be 0.150 - 0.170 inch.

e. Remove any remaining bushings metal or burrs from the groove at the oil hole location using a 3/8 x 1/8 inch mounted grinding wheel.

f. Bore the bushing to diameter I, which is 0.7805 - 0.7815 inch. Check with plug gage.

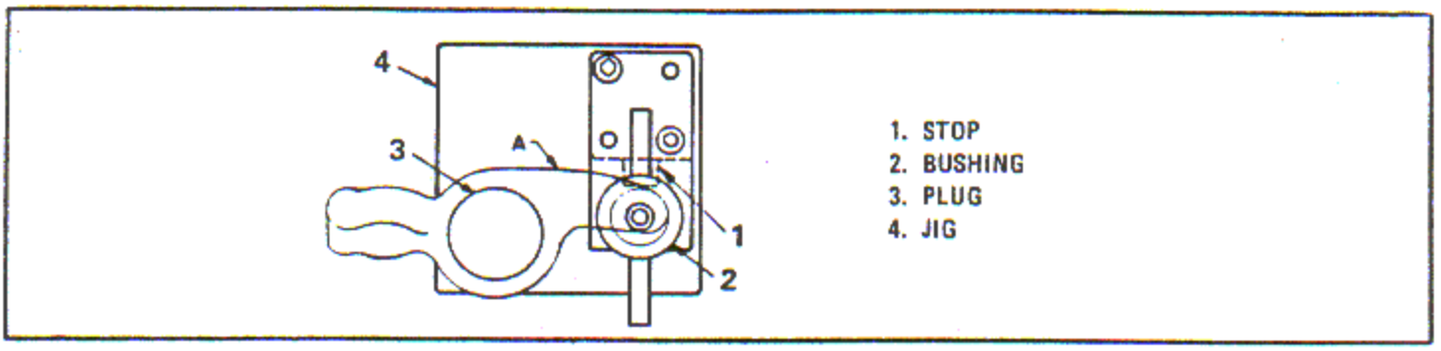

Figure 6-167. Removing Old Roller Pin

g. Break all sharp corners. Dewax by heating the rocker arm to 135°C (275°F) for 20 minutes. Blow out oil passages with kerosene, Federal Specification VV-K-211, heated to 49°C (120°F) maximum with approximately 20 pounds pressure.

6-528. ROCKER ARM ROLLER PIN REPLACEMENT. (See tool group 121.)

6-529. Remove Old Pin.

a. Secure proper plug (3, figure 6-167) in jig (4), three plugs being supplied as part of the jig. Place the rocker arm on the jig plug with the roller contacting the jig stop as shown. Clamp the rocker arm in this position by tightening the jig bushing (2).

NOTE

It is important that side A of the arm be located relative to the jig as indicated.

b. Drill the end of the pin to a depth of approximately 1/8 inch, using a 7/32 inch diameter drill.

c. Knock out the pin using a suitable punch and check for rocker arm pin hole elongation using gage. If this gage enters, the arm is no longer suitable for service use.

6-530. Install New Pin.

a. Select a rocker arm roller hub to obtain 0.000 - 0.001 inch tight fit between the sides of the rocker arm fork.

b. Of the three fixture plugs (5, figure 6-168) furnished with fixture (4), use the one that fits this rocker arm. Secure the plug in the fixture. Use the thinner of the two fixture locators (2) furnished.

c. Place the fixture (4) on a ten ton hydraulic press table. Install the rocker arm roller and hub in the rocker arm fork and insert the hub pin. Remove the fixture top block (1) and place the rocker arm over the fixture plug (5) with the roller resting against the V of the fixture locator (2) as shown. Replace the fixture top block and peen the pin at both ends by applying pressure through the press ram (6) until the underside of the top block contacts the locator.

NOTE

It is important that the proper size pin and hub be selected for the rocker arm roller pin being replaced.

d. Check the roller for freedom of rotation after reconditioning.

6-531. ROCKER ARM FORK REPAIR PROCEDURE.

a. Remove the rocker arm hub roller pin and check for pin hole elongation as instructed in paragraph 6-529.

b. Inspect the faces of the rocker arm fork for wear in the rocker arm roller hub area. Remachine as necessary up to a maximum width of 0.3145 inch.

NOTE

A roller pin length of 0.690 - 0.715 inch after riveting is acceptable.

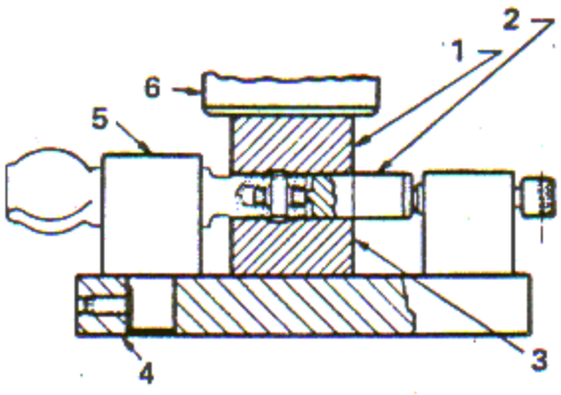

1. FIXTURE TOP BLOCK
2. FIXTURE LOCATOR
3. FIXTURE-BOTTOM BLOCK
4. FIXTURE
5. FIXTURE PLUG
6. RAM

Figure 6-168. Installing New Roller Pin

c. Maintain fits in references 255, 256, 257 and 258, Table of Limits, Section IX.

6-532. ROCKER ARM SPACER RECONDITIONING. Machine spacers as follows:

a. Finish grind the spacer OD to a dimension of 0.7740 - 0.7735 inch. Maintain surface finish of 18 microinches rms or better.

b. Bore the rocker arm bushings in accordance with paragraph 6-521, except maintain the ID within the revised limits of 0.7765 - 0.7755 inch.

c. During the engine assembly ensure correct fit of reworked spacers and valve rocker arms is maintained.

NOTE

Parts reworked in accordance with the foregoing must be used in individual engines only as a complete set.

d. If unable to obtain specified finish without going undersize, some concentric grooving of the spacers is allowable. Approximately 50% or more of the width of the area in contact with each section of the rocker arm bushing should be essentially true and not exceed allowable fit-up or surface finish requirements.

6-533. ROCKER ARM THRUST WASHER RECONDITIONING. Recondition the washers as follows:

a. Strip the lead plate from the washers.

b. Using a suitable lapping machine, lap each side for twenty minutes using 1800 grit (approx.).

c. Inspect washer for surface condition and thickness. Reject if surface is grooved, scored, pitted or if the thickness is less than 0.060 inch.

d. Lead-tin plate 0.0004 - 0.0006 inch thick. Material specification of washer is AMS 4625.

6-534. INTAKE PIPE DRAIN BOSS (CYLINDERS NO. 4 AND NO. 6), SALVAGE. (See tool group 36.)

6-535. Weld Drain Boss Detail to Intake Pipe.

a. Clean a plain intake pipe and drain boss thoroughly in a vapor degreaser or with a volatile pressure spray.

b. Remove the paint from the intake pipe location where the drain boss is to be brazed.

c. Place the intake pipe, assembled with the intake pipe flange, in fixture (2, figure 6-169) and secure as shown.

d. Install fixture bushing (3), detail 12, with fixture locator (4), detail 13, in the fixture (2) at the proper stamped location. Place the drain boss in the correct location on the intake pipe and secure as shown.

e. Proceed to tack braze the drain boss to the intake pipe using Alcoa No. 33 brazing flux and No. 718 Alcoa brazing rod (Aluminum Co. of America, 1126 Alcoa Bldg., Pittsburgh, Pa., or equivalent).

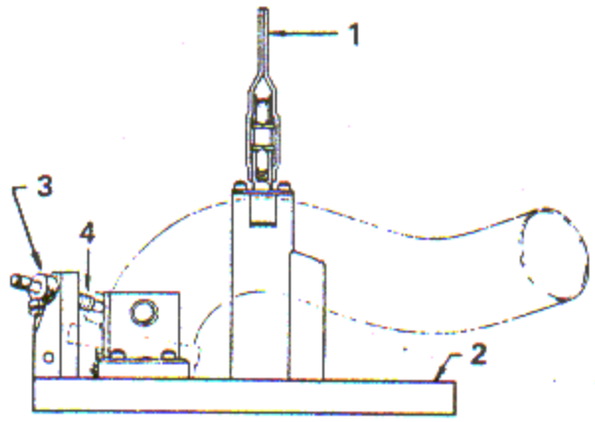

1. FIXTURE CLAMP
2. FIXTURE
3. FIXTURE BUSHING
4. FIXTURE LOCATOR

Figure 6-169. Weld Drain Boss Detail to Intake Pipe

Remove the pipe from the fixture (2, figure 6-169) and braze completely around the boss.

f. Wire brush the brazed joint, removing all blistered paint and discoloration.

6-536. Drill and Tap Intake Pipe Drain Boss Hole.

a. Reinstall the intake pipe in fixture (2, figure 6-170) and clamp lightly.

b. Check the drain boss alignment using fixture bushing (3), detail 12, and fixture locator, detail 13, in the fixture as instructed in the preceding paragraph. Clamp the pipe securely. Remove bushing (3) and locator from the fixture.

c. Install bushing (3), detail 10, in the fixture (2). Insert a 0.323 inch diameter drill (P, List No. 969, Cleveland Twist Drill Co., Cleveland, Ohio, or equivalent) into an electric hand drill and drill a hole through the drain boss and intake pipe to the depth shown. Remove the drill bushing.

d. Install bushing, detail 14, in the fixture. Insert a 1/8-27 ANPT taper reamer (No. 551, Greenfield Tap and Die Corp., Greenfield, Mass., or equivalent) in a solid handle tap wrench (No. 6, Greenfield Tap and Die Corp., Greenfield, Mass., or equivalent) and taper ream the boss hole. Check the hole with a 1/8-27 plain step plug gage (ANPT No. 1640A, Greenfield Tap and Die Corp., Greenfield, Mass., or equivalent). Should interference be encountered, remove bushing to obtain the proper taper depth.

e. Install bushing, detail 11, in the fixture. Insert a 1/8-27 ANPT pipe tap (No. 5320, Greenfield Tap and Die Corp., Greenfield, Mass., or equivalent) in a solid handle tap wrench (No. 6, Greenfield Tap and Die Corp., Greenfield, Mass., or equivalent) and tap the hole in the drain boss. When the tap wrench contacts the bushing, remove the bushing and continue tapping to the proper depth. Check thread depth with a 1/8-27 ANPT thread gage (No. 1540A, Greenfield Tap and Die Corp., Greenfield, Mass., or equivalent).

f. Insert a UG-90 degree countersink (M.A. Ford Mfg. Co., Inc., Davenport, Iowa, or equivalent) in an electric hand drill chuck and countersink the drain boss hole to the dimension shown.

g. Remove the intake pipe from the fixture. Prepare the aluminum surface and threads in accordance with AMS 2473.

NOTE

Paint per AMS 2503 except omit prime coat and apply only one coat of enamel.

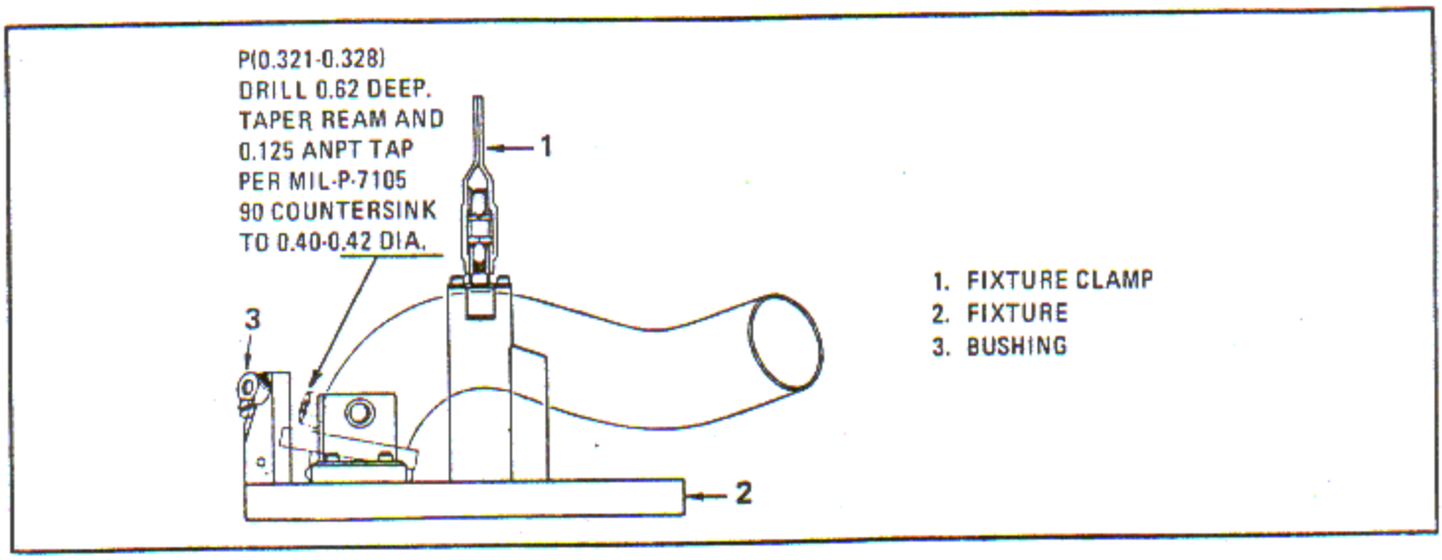

Figure 6-170. Drill and Tap Intake Pipe Drain Boss Hole

6-537. CYLINDER EXHAUST PIPE CONNECTOR OR SLEEVE, REPLACEMENT. (See tool group 32.)

6-538. Observe the following procedures when heating the cylinder.

a. Remove the silastic cylinder head fin braces with suitable thin nose pliers.

b. Degrease cylinder thoroughly to minimize discoloration during heating.

c. Prior to heating cylinder head with nozzle (5, figure 6-171), install rocker arm shaft bushing and the intake and exhaust valve guide and seat retaining holders (2), and a locally fabricated spacer (1) as shown in views A and C.

d. If applicable, remove the lock wire from the connector attaching screws and remove the screws and washers. Remove studs from exhaust port if applicable.

e. Provide several sponges cut so as to provide a squeeze fit in the exhaust port connector or sleeve. Place sponges in dry ice and alcohol or dry ice and gasoline.

6-539. EXHAUST PIPE CONNECTOR OR SLEEVE REMOVAL.

a. Clamp the cylinder assembly in stand (3, figure 6-171) shown in view C. Heat the cylinder internally through the exhaust port to a temperature of 260 - 287°C (500 - 550°F). Check temperature of cylinder at frequent intervals using a pyrometer gage and thermocouple (Cat. No. 1645-8 Alnor Pyro Point plus No. 1310 thermocouple, Illinois Testing Laboratories, Inc., Chicago, Illinois, or equivalent).

NOTE

A suitable temperature controlled oven may be used for heating the cylinder if desired.

b. When the cylinder head has reached the required temperature, squeeze sponge to remove a slight amount of fluid and quickly insert the thoroughly chilled sponge in the exhaust pipe connector or sleeve. See figure 6-172.

c. Allow connector or sleeve to cool for 30 to 60 seconds to shrink connector or sleeve. Remove the sponge and insert the applicable puller. Attach the puller to the connector or sleeve with the two screws as shown. Apply torque to the puller screw and remove connector or sleeve.

6-540. EXHAUST PIPE CONNECTOR OR SLEEVE PORT MACHINING.

a. Prior to machining exhaust pipe connection hole, check flatness of mounting pad surface. Surface must be reworked, if necessary, to produce a flatness within .002 inches FIR and must be

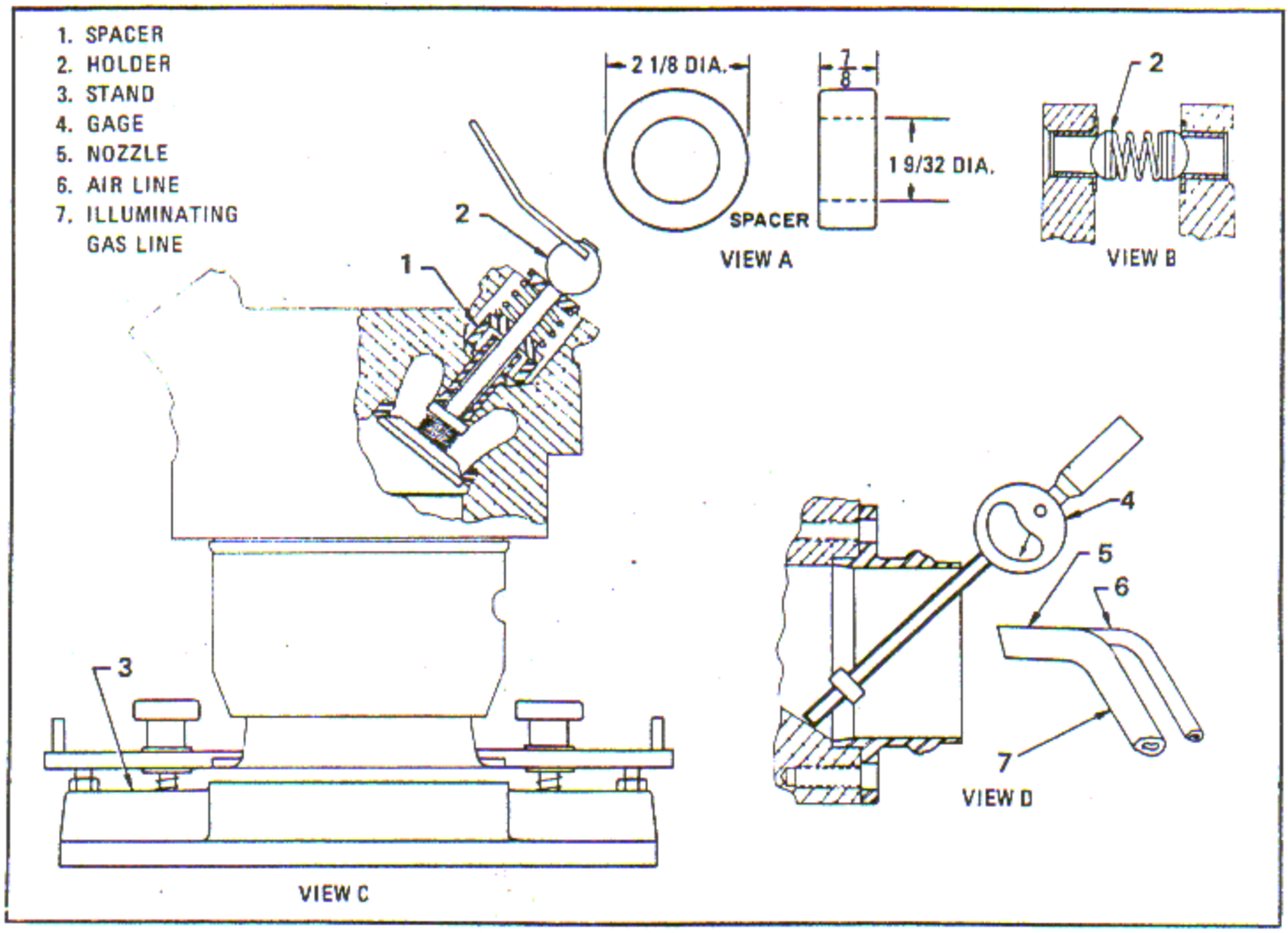

Figure 6-171. Cylinder Exhaust Pipe Tooling and Heating

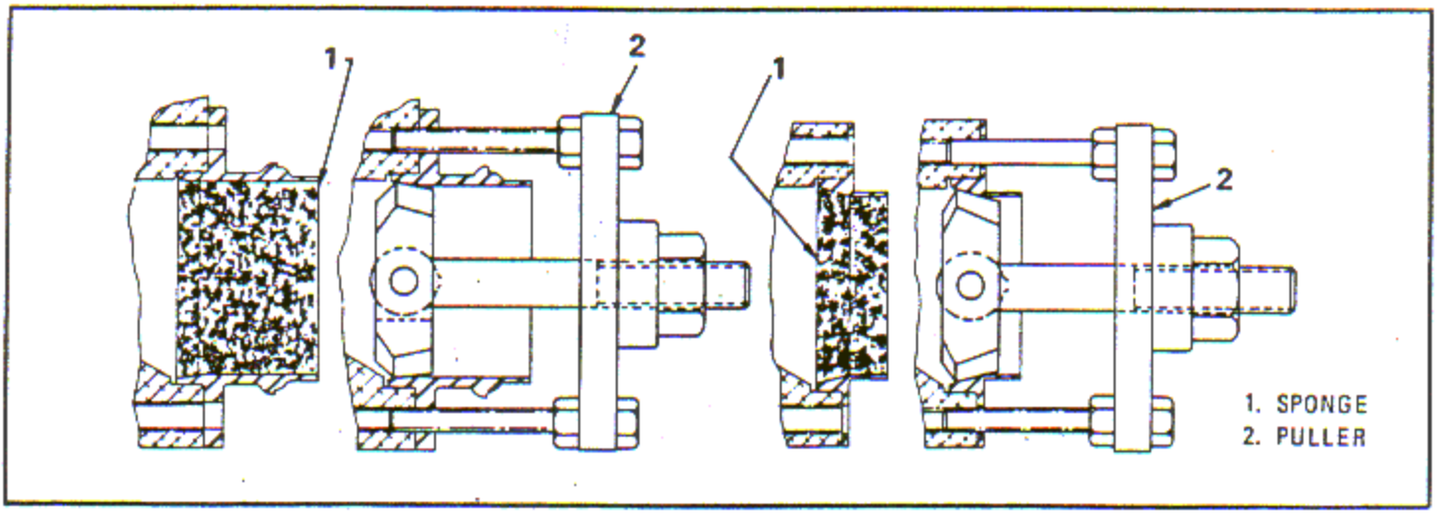

Figure 6-172. Cylinder Exhaust Pipe Connector or Sleeve Removal

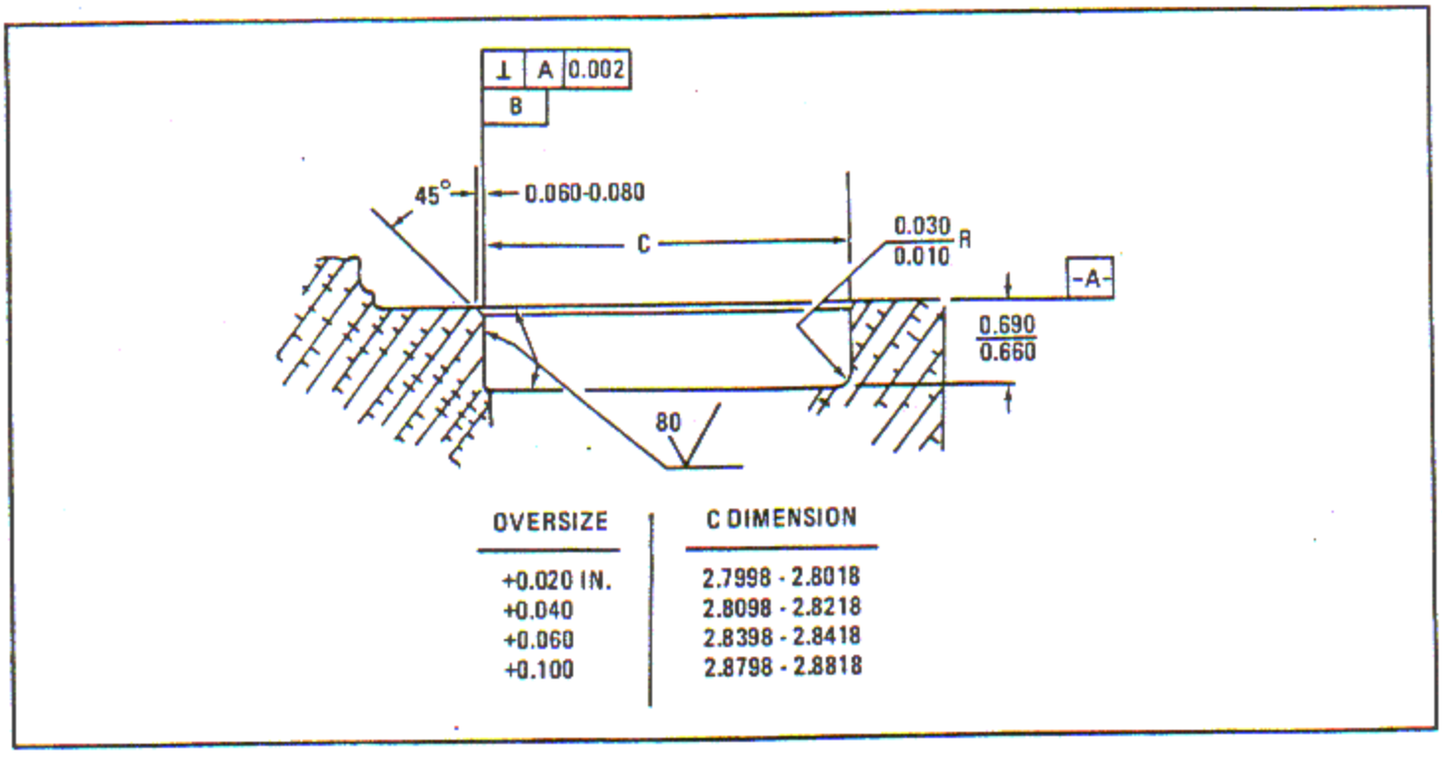

OVERSIZE	C DIMENSION
+0.020 IN.	2.7998 - 2.8018
+0.040	2.8098 - 2.8218
+0.060	2.8398 - 2.8418
+0.100	2.8798 - 2.8818

Figure 6-173. Exhaust Port Machining Limits for Oversize Connection

square to the bore diameter within .002 inch FIR. Obtain a surface finish of 80 microinches RMS or better. See figure 6-173.

NOTE

On some cylinder heads removal of the helicoil inserts will be necessary to prevent interference with the rework tool. Following reinstallation of inserts, check to insure that exhaust connection attaching screws will not bottom out during assembly of connection to head. Reject head if a screw does bottom.

b. Check dimension from reworked surface to center line of exhaust guide boss hole. Reject head if this dimension is less than 2.720 inches.

NOTE

Do not perform this operation if the exhaust connection hole is not worn, oversized or damaged, and appears satisfactory for the installation of a new connection.

c. Place fixture on the work table of a suitable radial drill press. Assemble the cylinder to the fixture in a horizontal position, facing the exhaust port upward. Clamp the assembly lightly in position.

d. Indicate the exhaust port ID and end face to run true within 0.001 inch full indicator reading. Clamp the cylinder tightly in position.

NOTE

A suitable wood block may be placed under the rocker box for additional support and rigidity.

e. Reindicate to ensure proper positioning of the exhaust port hole and face. Remove the indicator and assemble a precision boring head (Model No. 41, Maxwell Industries Inc., Macedonia, Ohio, or equivalent) to the drill spindle. Assemble a suitable boring bar and tool bit incorporating a 0.010 - 0.030 inch radius in the boring head.

f. Machine the ID to clean up and to fit the smallest possible oversize connection. Refer to reference No. 247, Table of Limits, Section IX, for required fit. Machine to a depth of 0.660 - 0.690 inch. Blend with the 0.010 - 0.030 inch corner radius.

g. If the bore cannot be cleaned up to fit the largest OS connection available, proceed as follows:

(1) Bore the recessed area 2.920 ± .001 inch diameter and to depth as shown. See figure 6-173.

Connection to be used	Depth of bore inches	Liner to be installed
3 hole standard	.670 ± .010	E-30-4270-2
3 hole .020 OS	.670 ± .010	E-30-4270-3

(2). Fabricate an aluminum alloy liner in accordance with NARF JAX drawing No. E-30-4270, Revision C.

(3). Chill the liner in dry ice and install in cylinder assuring that it is bottomed in the recess. If necessary, heat the cylinder to facilitate installation.

h. Remachine the chamfer to 0.060 - 0.080 inch x 45 degrees as shown.

i. The bore diameter and face (surfaces A) must be square within 0.002 inch full indicator reading after finish machining. Obtain a surface finish of 80 microinches rms or better. Check using suitable standard inspection equipment.

j. Using a suitable inside micrometer, measure the bore diameter. Record the dimension obtained to facilitate machining of the exhaust pipe connection.

6-541. CYLINDER HEAD EXHAUST CONNECTION BOSS REPAIR. Cylinder heads in which the exhaust connection boss heli-coil threads are damaged may be repaired by installation of a bushing. The bushing size shall be 0.500 - 20 X 0.3125 - 18 X 0.750 inches and shall be fabricated from 303 corrosion resistant steel.

NOTE

This bushing shall not be installed in a cylinder in which the exhaust connection bore is greater than 0.100 inch oversize.

6-542. Machine Connector or Sleeve Outside Diameter.

NOTE

Omit this operation if the exhaust connector port has not been machined and a standard connector will provide the proper pinch fit.

a. Place a selected oversize connector or sleeve in the chuck of a suitable engine lathe. See figure 6-174.

b. Indicate the face and outside diameter A to run true within 0.001 inch full indicator reading.

c. Using the cylinder exhaust port diameter established in paragraph 6-540, machine the connector outside diameter A to provide the pinch fit indicated in reference 247, Table of Limits, Section IX.

d. Reprovide the radius shown and break all sharp edges 0.005 - 0.015 inch approximate radius.

e. Surface finish must be 40 microinches rms or better. Use suitable standard profilometer (Micrometrical Manufacturing Company, 345 South Main St., Ann Arbor, Michigan, or equivalent) equipment.

f. Attach the finished machined connector or sleeve to the cylinder if it is not to be installed at this time.

6-542A. REWORK OF EXHAUST PIPE CONNECTOR (P/N 149596 AND OVERSIZES).

a. Rework exhuast pipe connector to provide a clearance radius in accordance with figure 6-6-175.

6-543. Exhaust Pipe Connector or Sleeve Installation.

a. Prepare the cylinder for heating as instructed in paragraph 6-538. See figure 6-176.

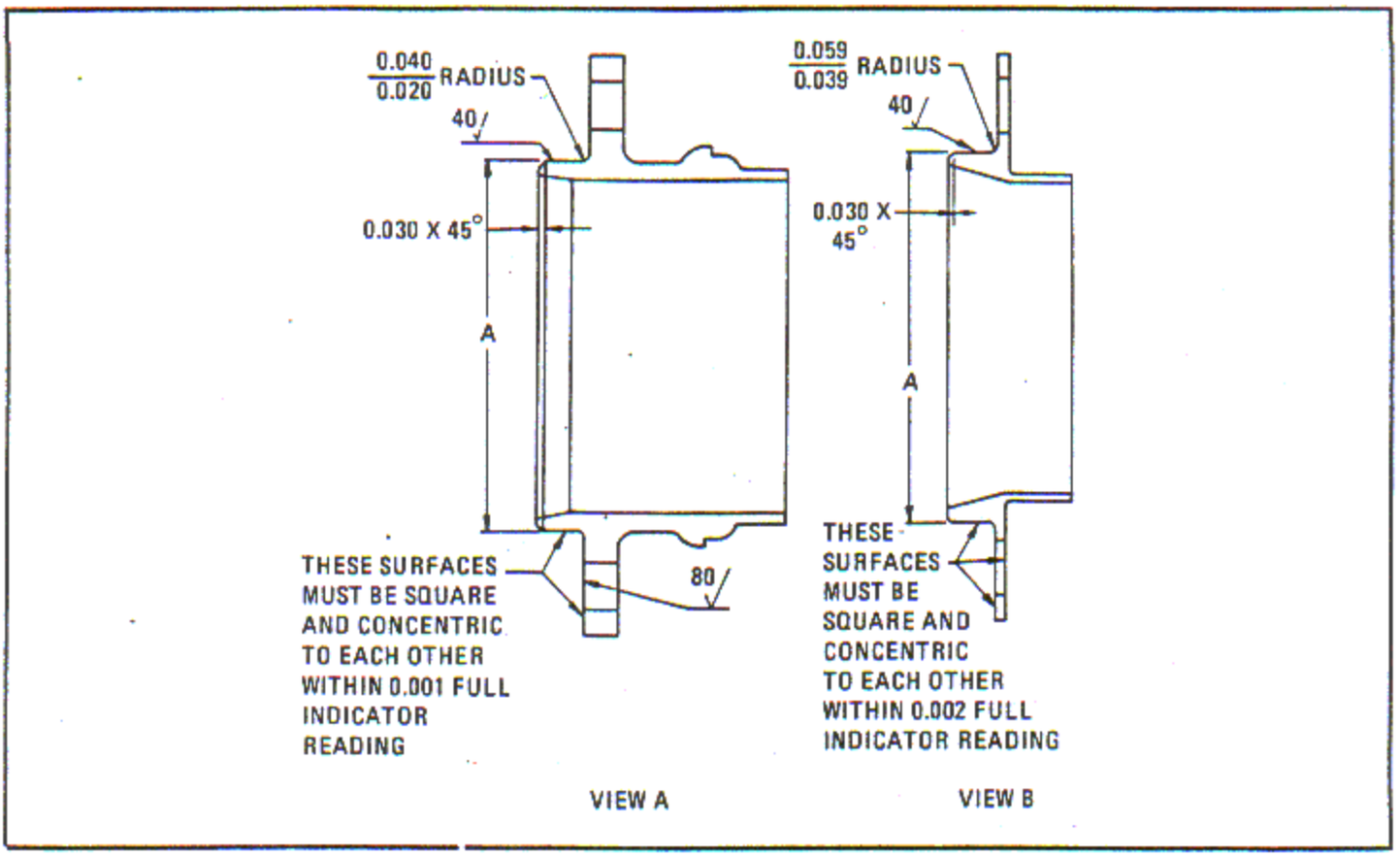

Figure 6-174. Cylinder Exhaust Port Connector or Sleeve Machining Limits

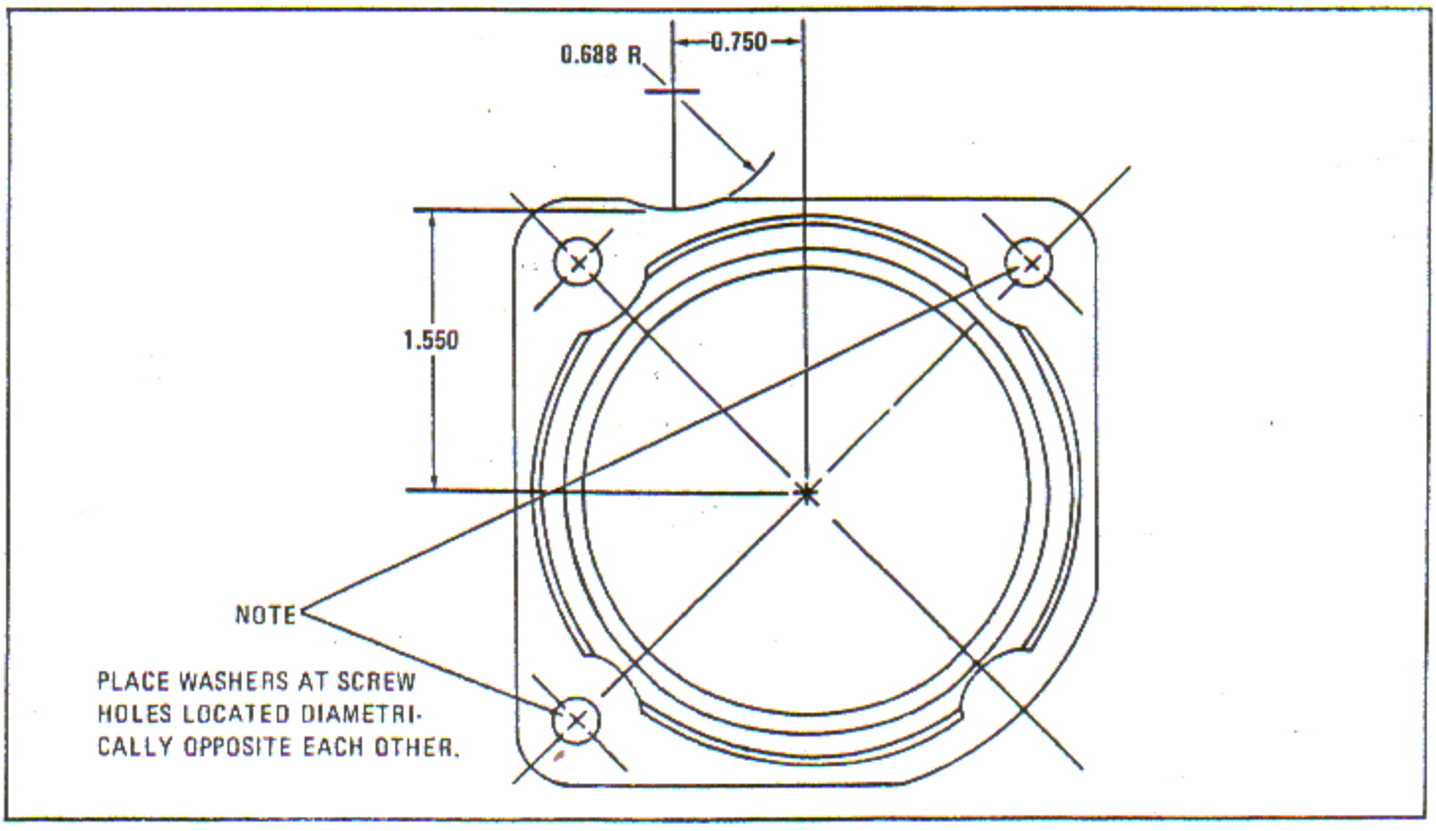

Figure 6-175. Machining Clearance Radius in Exhaust Connection

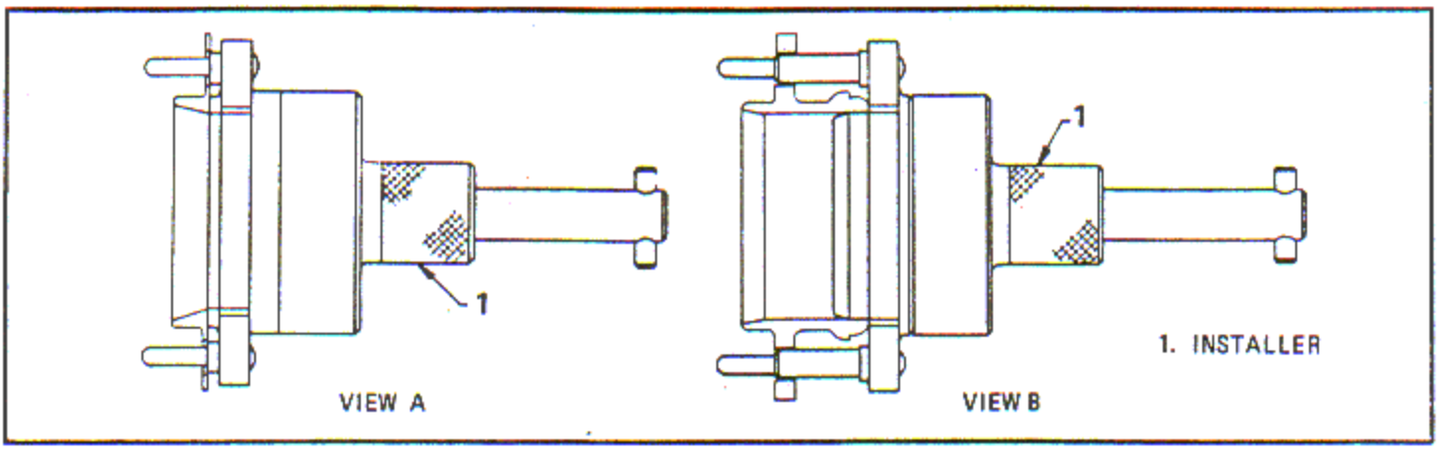

Figure 6-176. Cylinder Exhaust Port Connector or Sleeve Installation

b. Assemble the connector or sleeve to the applicable installing tool, group 32. Chill the connector or sleeve and applicable installer using standard shop practice to -57°C (-70°F).

c. Heat the cylinder head with nozzle, group 32, to a temperature of 260 - 287°C (500 - 550°F). Check temperature of cylinder at frequent intervals, using a pyrometer gage and thermocouple. Refer to paragraph 6-539.

d. When the cylinder head has reached the required temperature, install the chilled connector or sleeve in the port. Allow sufficient time for seizure to take place before removing the installing tool.

e. Ensure the connector or sleeve is properly seated.

f. On -80 and -86 series engines:

(1) Install three attaching screws and two washers at locations shown in figure 6-175. Torque the screws to an initial torque of 70 inch-pounds.

(2) Allow cylinder and connector to reach room temperature and retorque the attaching screws to 110 - 140 inch-pounds.

CAUTION

Screws must be selected to obtain contact between attaching screw heads and connection flange which is mandatory for proper tightening of the attaching screws. No clearance is permitted.

(3) Following installation, inspect the attaching screws for thread bottoming in the insert by checking for contact between attaching screw heads and the connection flange.

(4) Lockwire the three attaching screws together.

g. On -76 series engines:

(1) Reinstall silastic head fin braces as instructed in paragraph 6-459.

(2) Reinstall studs in exhaust port if removed.

(3) Install four self-locking nuts on studs and torque nuts to 125 - 140 inch-pounds.

6-544. EXHAUST PIPE FLANGE TO CYLINDER EXHAUST PORT ATTACHING STUD REPLACEMENT (R1820-76 SERIES). (See tool group 84.)

6-545. Pilot Drill Broken Stud. Clamp jig to the cylinder using engine nuts. Insert bushing A in the jig hole over the broken stud. Drill through the stud using a 1/8 inch diameter drill. Do not drill into the bottom of the blind hole.

6-546. Finish Drill Broken Stud. Replace the drill and drill bushing with a 1/4 inch diameter drill and bushing B. Drill through the stud. Do not drill into the bottom of the blind hole.

6-547. Remove Broken Stud. Remove the jig from the cylinder. Drive a suitable removing tool into the drilled hole in the stud. Use a tap wrench for removing.

6-548. Remove Bent or Damaged Stud.

a. Place a suitable adapter in a suitable stud remover. Place the adapter on the stud and drive down over the threads. Then remove the stud by turning the stud remover with a wrench.

b. If the threads pick up and the stud remover cannot be turned, remove the stud remover from the adapter. Place the stud remover block on the adapter. Screw a suitable puller into the stud remover block and remove the adapter from the stud. Cut off the stud close to the case and remove the stud as indicated in previous operations for broken studs.

6-549. Retap for New Stud.

a. When replacing a stud with another stud of the same size, run the proper size tap into the hole to clean up the threads without removing any metal. When retapping for the next oversize stud, use the proper tap.

NOTE

Carbon steel exhaust pipe flange studs, P/N's AN151156 and AN155356 or oversizes, shall be replaced on a retrofit basis by stainless steel studs, CWC P/N's 607D22 and 607D23 or oversizes, respectively.

b. Tap the hole using the proper lubrication blend as indicated in cutting oils and coolants, paragraph 6-197.

6-550. Install New Stud.

NOTE

Apply anti-seize compound composed of by weight 75 per cent petrolatum and 25 per cent graphite powdered flake to the stud threads. Use only sufficient lubricant to cover the sides of the threads with a thin layer.

a. Select the proper size stud and install with a suitable driver and remover and a suitable collet and pin.

b. Use a suitable torque wrench to determine the correct torque required for the specified stud height. If the correct torque is not obtained at the required stud height, remove the stud and select another stud.

6-551. CYLINDER ASSEMBLY EXHAUST PORT PAD REPAIR. (See tool group 32.)

6-552. Resurface Pad.

a. Resurface the pad to the dimensions shown, removing only the minimum amount of material to provide an essentially true surface. See figure 6-177.

NOTE

The presence of several minor depressions which will not cause leakage need not be cause for further rework of the surface or rejection of the cylinder assembly.

6-553. Rework Limits.

a. Determine the distance between the resurfaced pad and the centerline of the exhaust valve guide bore, if this distance is less than 2.720 inches the cylinder is to be scrapped.

6-554. Drill and Tap New Hole for a Heli-Coil Insert.

a. Attach drill jig to the exhaust port pad with exhaust pipe connection attaching screws. Locate the third hole in the jig on the top left side of the port (cylinder viewed from the rear). See figure 6-177.

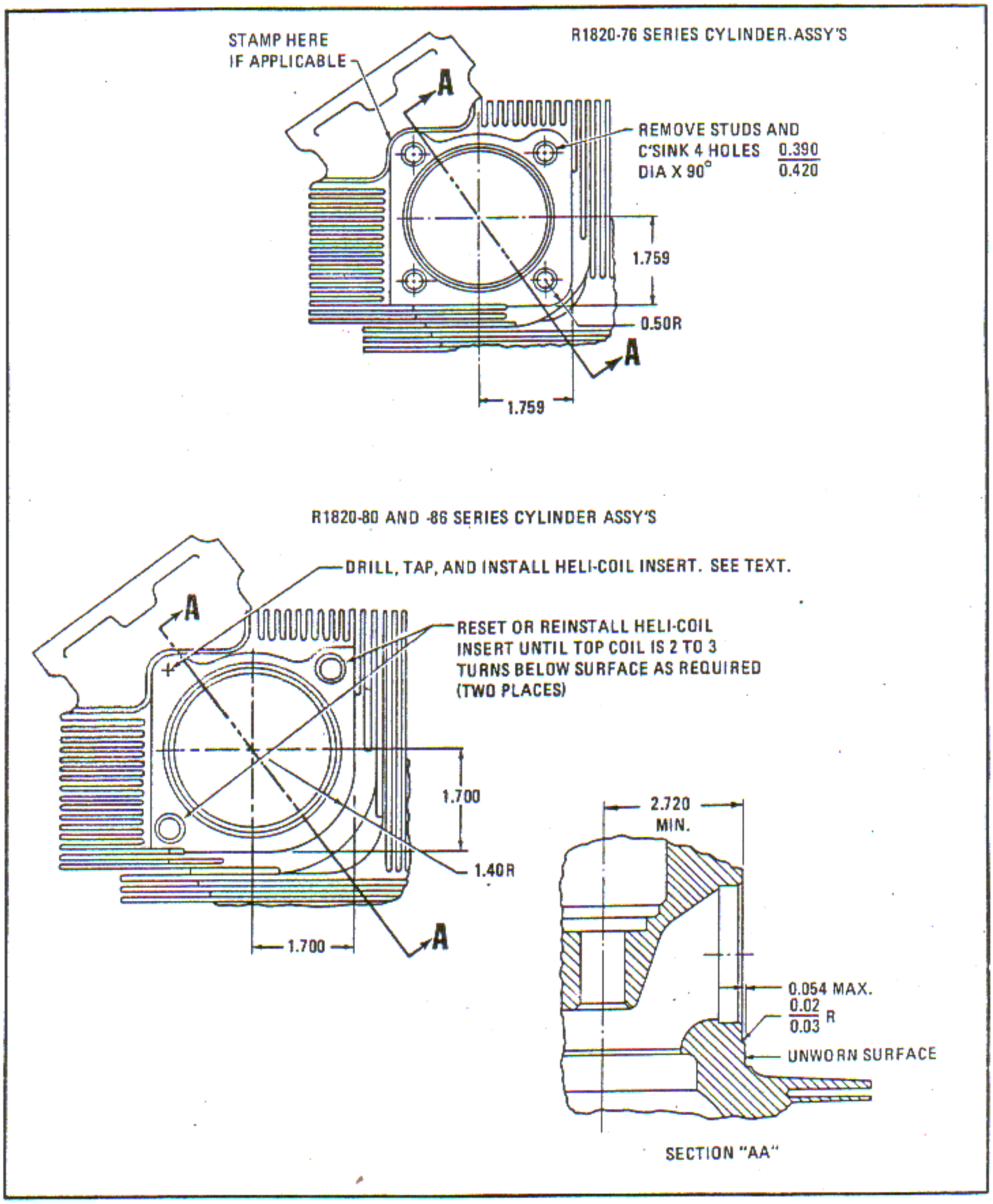

Figure 6-177. Resurfacing Exhaust Port Pad

c. Place checking gage flat against the lathe fixture (4, figure 6-178) and engage the tool cutting edges accurately in the gage angle. Clamp the grooving tool (2) securely in the tool post holder.

d. Insert the fixture draw rod (6) through the fixture (4).

e. Clamp locating fixture (3) around the piston, engaging it in the lower groove as shown. Place the locating fixture on the lathe fixture (4), engaging the two dowel pins. Insert pin (1) through the piston pin hole and the eye of the draw rod (6). Clamp the locating fixture with the piston to the lathe fixture by tightening the nut at the end of the draw rod.

f. Indicate the piston OD at location B to run true within 0.001 inch full indicator reading.

g. Centralize the grooving tool (2) in the top ring groove and bring the tool toward the bottom of the groove as close as possible without touching it, while rotating the piston by hand. At this point, set the cross feed stop to zero. This establishes the maximum depth. Adjust the machine spindle to run at 125 - 200 rpm. The use of cutting oil optional.

h. While operating the machine, move the carriage until the tool touches the right side of the groove. Back the tool out and move the compound rest approximately 0.001 inch to the right. Advance the tool into the groove until the zero reading is reached. Repeat the procedure until the side of the groove is cleaned up to a surface finish of 20 microinches rms or better. Clean up the opposite side of the groove in the same manner, maintaining the same maximum depth of the grooving tool.

i. After both sides of the groove have been machined to clean up, check the groove with proper snap gage. If the gage passes through the groove, the piston is no longer serviceable. If the gage does not pass through the groove, proceed to recondition all the wedge grooves as indicated in steps a. through i. Check each groove with the gage.

b. With a 21/64 inch diameter drill, drill a 0.326 - 0.333 inch diameter hole 1.220 - 1.280 inch deep at the third hole in the jig.

c. Tap the hole 1.090 - 1.220 inch deep with a 5/16-18 thread, 0.3486 - 0.3506 inch PD, Heli-Coil tap.

d. Check the thread with a 5/16-18 thread, 0.3486 - 0.3506 inch PD, Heli-Coil thread plug gage.

6-555. Install Heli-Coil Insert in New Hole.

a. Using a Heli-Coil inserting tool, install insert so the last coil is 2 - 3 turns below the connection mounting surface.

b. Check the installed insert thread size with a 5/16-18, Class 3, thread gage with a PD of 0.2764 - 0.2794 inch.

6-556. WEDGE-TYPE PISTON RING GROOVES RECONDITIONING. (See tool groups 94 and 95.)

6-557. Clean and Inspect Piston Ring Grooves.

a. Prior to any reconditioning, clean pistons in accordance with instructions in Section V.

b. Inspect ring grooves in accordance with instructions in paragraph 6-120.

6-558. Reconditioning Ring Grooves.

a. Clamp lathe fixture (4, figure 6-178) to a lathe faceplate (5) and indicate A surfaces to run true within 0.001 inch full indicator reading. The compound rest must be square to the lathe fixture as shown.

b. Use a suitable tool post holder, parallel blocks and shims as required to ensure tight and rigid clamping of grooving tool (2). Adjust the tool post to raise the point of the grooving tool to dead center, maintaining the tool shank horizontal. Clamp the grooving tool lightly.

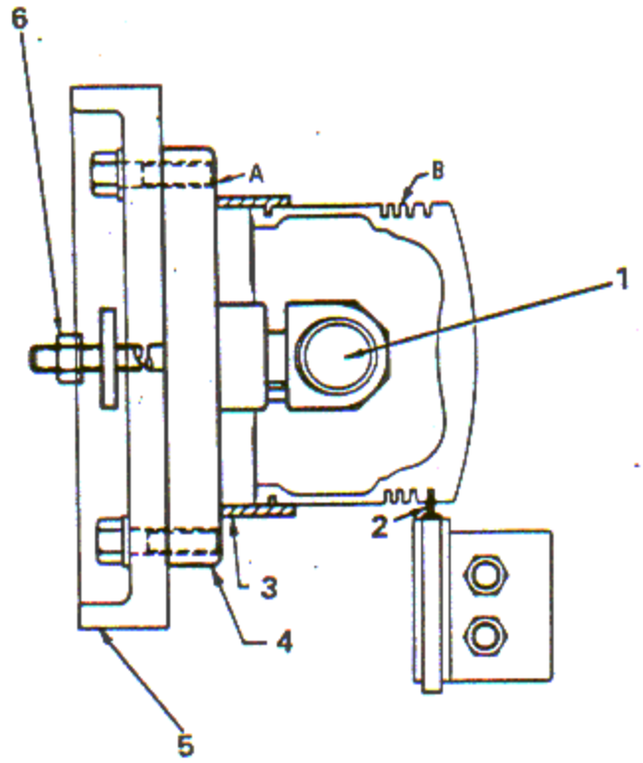

1. PIN
2. GROOVING TOOL
3. LOCATING FIXTURE
4. LATHE FIXTURE
5. LATHE FACEPLATE
6. FIXTURE DRAW ROD

Figure 6-178. Reconditioning Wedge-Type Piston Ring Grooves

CAUTION

To obtain maximum support for the piston ring, a sharp edge at the outer periphery of the groove sides is required. To obtain best results without forming burrs, the grooving tool should be maintained to the proper configuration and be kept sharp and clean cutting at all times. It is to be ground only on the top and not the sides when sharpened. Use the checking gage to ensure the angle of the tool is correct. Inspect the outer edges of the ring grooves to make certain they are clean and free of burrs. Dress the edges of the groove with a fine file when it is necessary to remove burrs. Work from the inside of the groove outward to prevent rolling the metal into the groove which would result in erroneous fitment of the piston rings. Use care when filing burrs to prevent contact with the newly machined groove. The breakedge caused by the removal of burrs must not exceed 0.010 inch.

6-559. INSPECT WEDGE-TYPE RING GROOVES AFTER RECONDITIONING. (See tool groups 84 and 95.)

a. In addition to inspecting the ring grooves as indicated in the preceding paragraph, perform the following operations.

b. Surface finish on both sides of the reconditioned grooves must be 20 microinches rms or better as compared to standard surface finish specimens.

c. Check the profile of the reconditioned grooves for possible convex, concave or irregular surfaces using steps d through g.

d. Using a "V" block, support the piston horizontally over a source of diffused light.

e. Adjust the height of a magnetic block to support a precision ground pin or knife edge at the horizontal centerline of the piston.

f. Adjust the pin or knife edge to contact the full width of the groove side surface.

g. Using a 10 - 20 power magnifying glass, inspect the point of contact to ensure that there is no light leakage between the pin or knife edge and the piston groove side surface. Any light leakage is unacceptable. Repeat this procedure at 120 degree intervals on this groove and the remaining ring groove sides.

h. Check the ring groove side angles as follows in steps i through m.

i. Place the eight degree angle gage (3, figure 6-179, view A) of telescope assembly on the surface plate stand (4). Assemble the telescope assembly instrument (2) to the stand. Aim the instrument at the eight degree angle gage as shown. Adjust the telescope assembly so that the 60 minute mark on the illuminated or bright scale intersects the 20 minute mark on the fixed black scale when viewed through eye piece. The instrument is now adjusted to seven degrees 60 minutes or eight degrees. Clamp the instrument and recheck the setting.

j. Insert a 0.060 inch Johansson block (5, view B) of telescope assembly into the No. 1 ring groove resting flat against the upper angle. Hold the 0.060 inch block in this position with the support ring (7) as shown. Check the position of the block to ensure that it is not bottoming in the groove, but contacts the full width of the angle with no visible light between the block and the ring groove sides.

k. Install the piston in holding fixture (6) of the telescope assembly (2) and place the assembly on the angle checking surface plate stand with the block of the assembly in the twelve o'clock position. Adjust the piston so that the telescope assembly is aimed at the protruding portion of the block shown. Look through the eye piece. The bright portion of the scale should intersect with the 20 minute mark of the fixed black scale between 23 and 37 minutes to indicate a 7 degree 23 minute to 7 degree 37 minute reading. Readings should be taken 180 degrees apart underneath the valve pockets.

l. Reposition the gage block in No. 1 ring groove to rest against the bottom side surface using procedures and observing previously stated precautions.

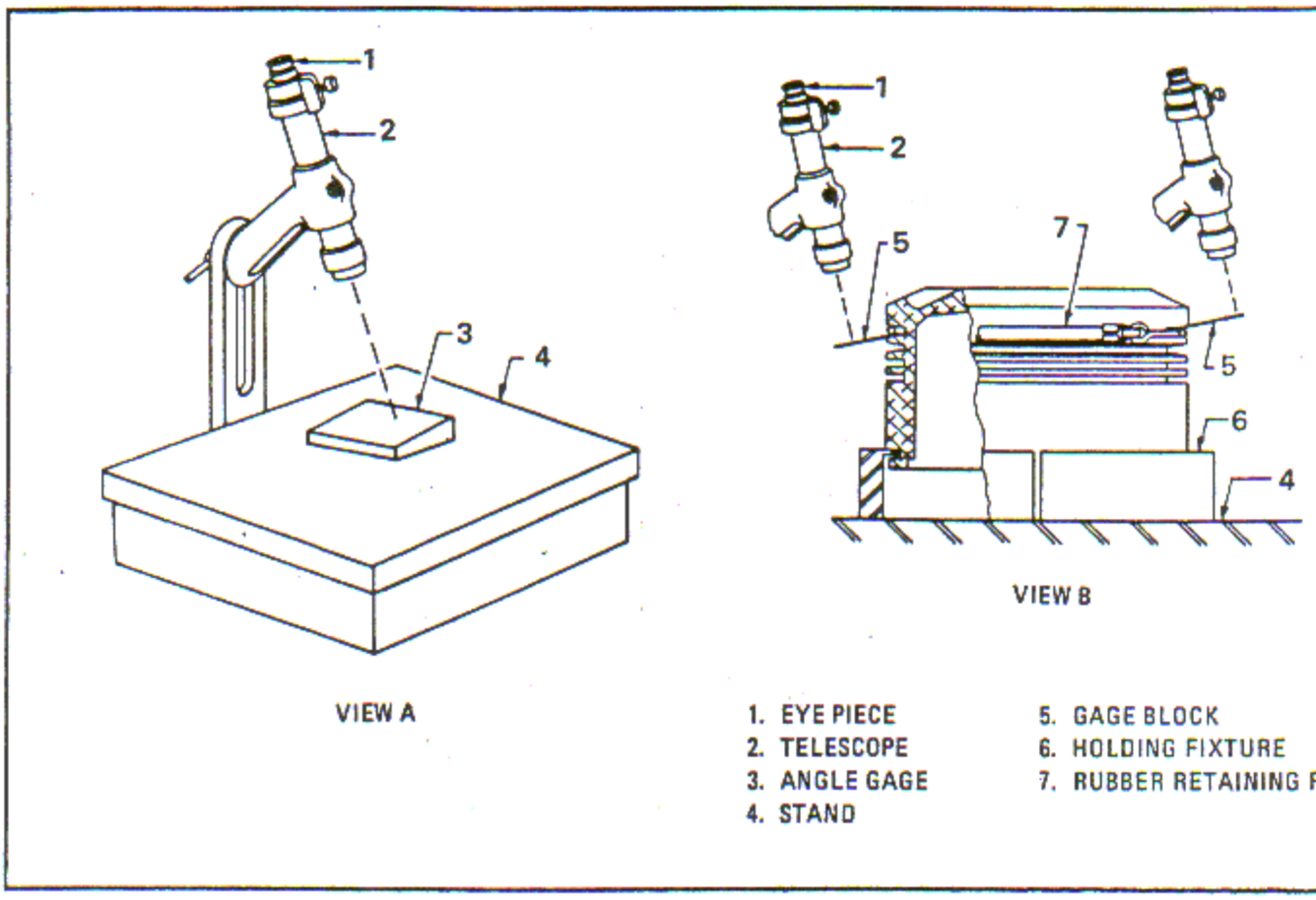

Figure 6-179. Inspection of Wedge-Type Ring Grooves After Reconditioning

m. Rotate the piston until the gage block (5, figure 6-179, view B) is in the six o'clock position, then move the piston on the surface plate until the telescope assembly lines up with the block. Read the groove side angles as described in step k.

n. Repeat steps i through m in order to determine the angles on the remaining wedge ring groove side.

6-560. VALVE TAPPET ROLLER TRACKS RECONDITIONING. (See tool group 142.)

6-561. Grind Valve Tappet Roller Tracks (OD Surfaces).

a. Install a grinding wheel, 24 x 12 x 2 - 1/4 inches (Macklin Co., Jackson, Michigan, No. A180-T8-B2 or equivalent) on a 10 inch Norton cylindrical grinder or equivalent.

b. Secure a radius diamond dresser to the carriage at a position where it will not interfere with the grinding operation. Align the vertical centerline of the diamond dresser pivot to th tical centerline of the grinding wheel. Place able stop and indicator on the table bed to e returning the carriage to the same position fo dressing the grinding wheel.

c. Dress the grinding wheel to a 3.750 - 4. inch radius.

d. Install an unserviceable roller and a dri dog on arbor and place it between the mach centers. Align the vertical centerline of the tappet roller to the vertical centerline of th grinding wheel and grind the unserviceable enough to provide a reground surface on th diameter. Use a grinding wheel speed of 50 face feet per minute, at a work speed of 30 a light hand feed and a heavy stream of coo as specified in paragraph 6-197.

NOTE

It may be necessary to adjust the table position and repeat the previous steps to center the crown radius on the roller.

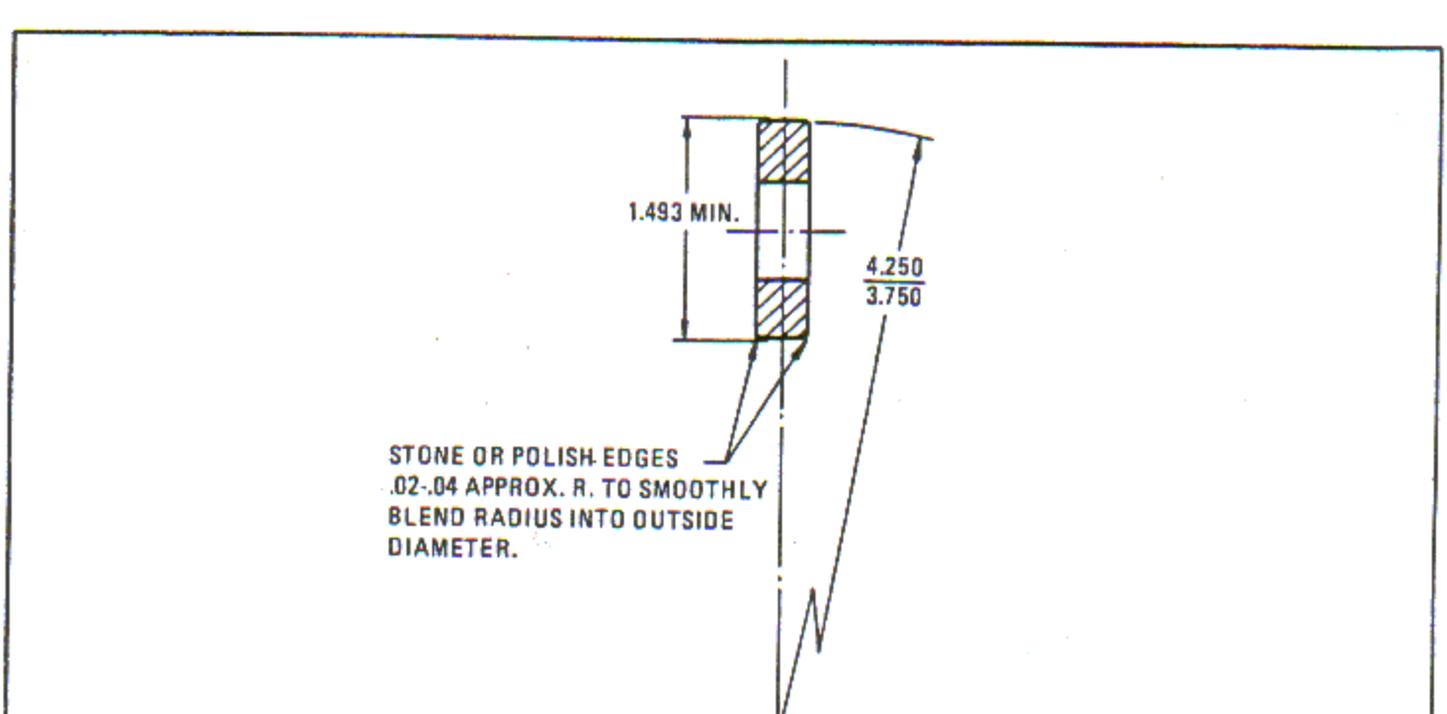

Figure 6-180. Grind Valve Tappet Roller Tracks

e. Remove the roller and reverse it on the arbor, applying a light coat of prussian blue to the OD of the roller. Start the machine and touch the OD of the roller with the grinding wheel. The prussian blue should disappear immediately upon contact, indicating that the radius is properly centered on the roller.

f. After establishing the correct carriage position, set a suitable stop and indicator on the table bed to enable returning the carriage to the same position after dressing the grinding stone.

g. Grind the serviceable rollers to clean up but do not go below a minimum diameter of 1.493 inches with a 6 microinch finish or better.

NOTE

Dress the wheel as required to obtain the 6 microinch finish. Normally, 40 or 50 rollers can be ground between wheel dressings.

h. Stone and polish all sharp edges to 0.020 - 0.040 inch radius, with a 6 microinch rms finish or better and smoothly blend the radius into the OD of the roller.

6-562. Inspect Tappet Roller Tracks.

a. Set the valve tappet roller in an optical comparator (Model PC-14 and 48 mm Lens with a 5X Ocular, Jones and Lamson Machine Co., 40 Woolsan Street, Springfield, Vermont, or equivalent) and set it for a 31.250 magnification.

b. Install chart and compare the radius of the part with the radius on the chart.

c. Chuck the roller and arbor between dead centers and check the OD of the roller. Concentricity must be within 0.001 inch full indicator reading.

d. Check the reground surface of the roller for a 6 microinch rms finish or better with standard surface finish specimens or a profilometer.

e. Magnetic particle inspect the valve tappet roller.

f. Wet blast rollers. Refer to paragraph 6-565.

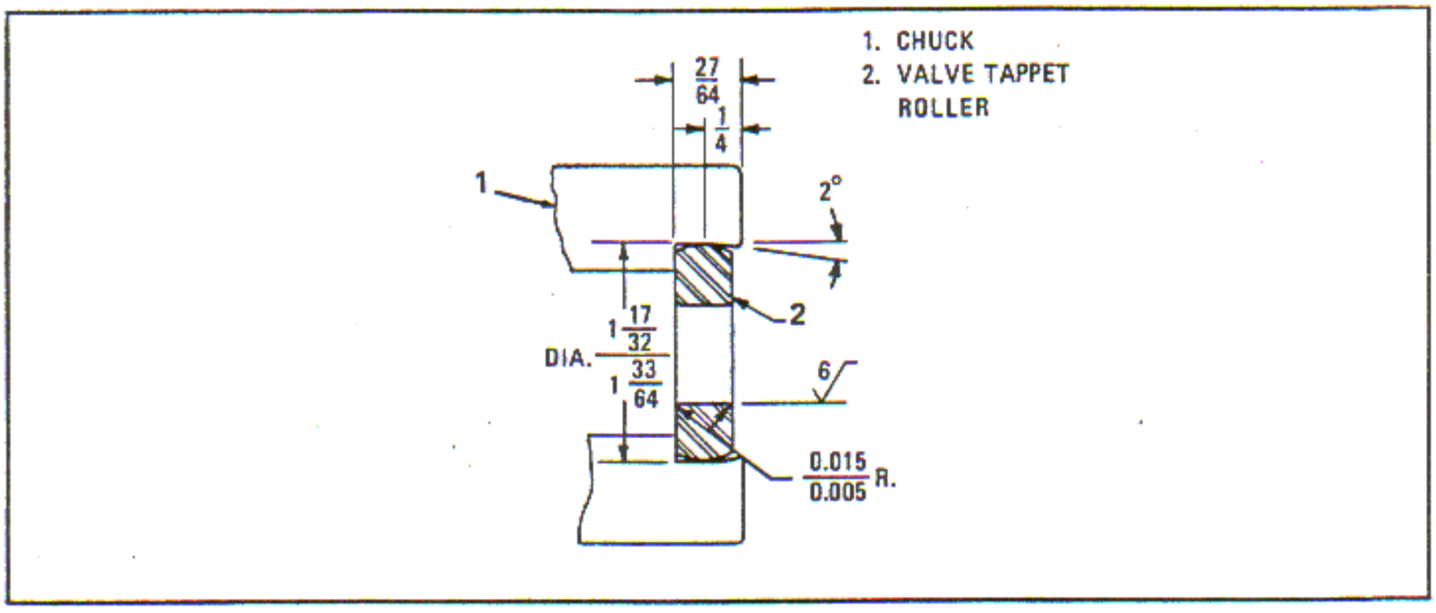

Figure 6-181. Grind Valve Tappet Roller ID

6-563. VALVE TAPPET ROLLER ID RECONDITIONING.

6-564. Grind Valve Tappet Roller ID.

a. Mount a suitable chuck (1, figure 6-181) with soft jaws to the faceplate of an internal grinder (Heald Model 72A, Heald Machine Works, 1835 Stewart Ave., Springfield, Missouri), or equivalent. Grind jaws to suit valve tappet roller (2) outside diameter. Indicate locating surfaces to run true within 0.0005 inch full indicator reading. Break sharp jaw edges.

b. Chuck a valve tappet roller and indicate roller face and ID to run true within 0.001 inch full indicator reading.

c. Grind the roller inside diameter, using a suitable grinding wheel (Cat. No. 80K8VG, Norton Co., Worcester, Mass.) or equivalent, at approximately 6000 surface feet per minute to suit applicable bushing oversize. Maintain sufficient stock in inside diameter to allow for polishing.

Y Size	Bushing OS	Grind Roller ID to:
Std.	Std.	0.6880 - 0.6875
Y1	+0.002	0.6900 - 0.6895
Y2	+0.004	0.6920 - 0.6915
Y3	+0.006	0.6940 - 0.6935

NOTE

If the inner bearing surface of the roller does not clean up within the above rework limits, the ID may be ground up to an additional 0.003 inch, to a maximum limit of 0.6970 inch. Any additional grinding is prohibited, bacause of the difficulty in obtaining an acceptable service limit clearance during engine build-up.

d. Polish the inside diameter to achieve a 6 microinch rms finish or better using suitable pouncing paper or crocus cloth. Stone or polish sharp edges to 0.005 - 0.015 inch approximate radius to blend with face and inside diameter.

e. Dimensionally inspect using suitable hole bore gages. Magnetic particle inspect for heat checks and grinding cracks in accordance with paragraph 6-26.

6-565. WET BLAST VALVE TAPPET ROLLERS.

6-566. Preparation for Wet-Blasting.

a. Locally fabricate a rack to hold the valve tappet rollers. The following procedure is a suggested method. Weld a rejected tappet roller on the end of a rod which is 5/8 inch in diameter and approximately 20 inches long.

b. Place the rollers to be blasted on the rod. After the last roller, place another rejected roller properly identified so it will not be mistaken for a serviceable part. With all the rollers in place on the rod, there should be enough space at the end for the operator to hold the rod for the blasting operation.

c. Place the assembly of valve tappet rollers and rod in the cabinet (VB Model 3030 Type B-20, Vapor Blast Co., Milwaukee, Wisconsin, or equivalent) with the welded end of the rod resting on the cabinet base. Hold the opposite end of the rod at a 60 degree angle to the base of the cabinet. With the other hand hold the spray gun (Model S, incorporating a 1/2 inch discharge nozzle and a 7/32 inch air jet, Vapor Blast Co., Milwaukee, Wisconsin) three inches from the valve tappet rollers.

6-567. Wet Blast Solution Mixture.

a. Fill the cabinet hopper to one inch below the overflow pipe with clean water. Place a fine screen over the hopper in the cabinet. Place the ingredients in the following list on the screen.

Ingredient	Source	Amount
FF-W Aluminum Oxide (280-320 Grit) or equivalent	Carborundum Co., Niagara Falls, New York	50 lbs. approx.
No-Pak	Vapor Blast Co., Milwaukee, Wis.	4 ounces
Metrolux	Vapor Blast Co., Milwaukee, Wis.	8 ounces

NOTE

No-Pak helps keep the abrasive in suspension while the Metrolux acts as a rust inhibitor.

b. Apply water pressure from the blasting gun to the mixture until it washes through the screen and into the hopper. The resultant mixture may be tested by filling an eight ounce beaker with the mixture from the blast gun and allow it to settle. The mixture should show a ratio of three parts liquid to one part solids.

6-568. Wet Blast Rollers.

CAUTION

Wet blasting the sides of the rollers is optional. Exercise care to prevent wet blasting the holes.

a. Spray sufficiently to obtain a satin frosted finish. Do not concentrate the blast in any one area. Air pressure for blasting the rollers should be approximately 40 psi. The surface finish of the rollers must be 8 - 15 microinches rms.

b. Clean the rollers in a vapor degreaser, then slush with external preservative compound, Specification MIL-C-16173, grade 2, to prevent corrosion.

6-569. VALVE TAPPET SOCKET SALVAGE. Valve tappet sockets found to have a slight amount of wear or galling on the shoulder may be reconditioned by removing material to clean up but not exceeding dimension shown in figure 6-182. Break sharp edges 0.003 - 0.015 inch.

NOTE

Maintain and blend the 0.020 - 0.030 inch radius at the base of the shoulder.

6-570. SUPERCHARGER FRONT HOUSING MOUNTING FACE RECONDITIONING.

6-571. Machining Limits.

a. It is permissible to remove up to 0.005 inch material from the supercharger front housing face for clean-up purposes.

b. When the 0.005 inch limit does not clean up the front face, the housing may be further machined to a maximum of 0.020 inch. A steel shim of 0.010 or 0.020 inch thickness is provided for housings machined to various limits. The shim must be used with the machined housings at installation.

NOTE

Only one shim may be used. Select either the 0.010 or 0.020 inch size as applicable.

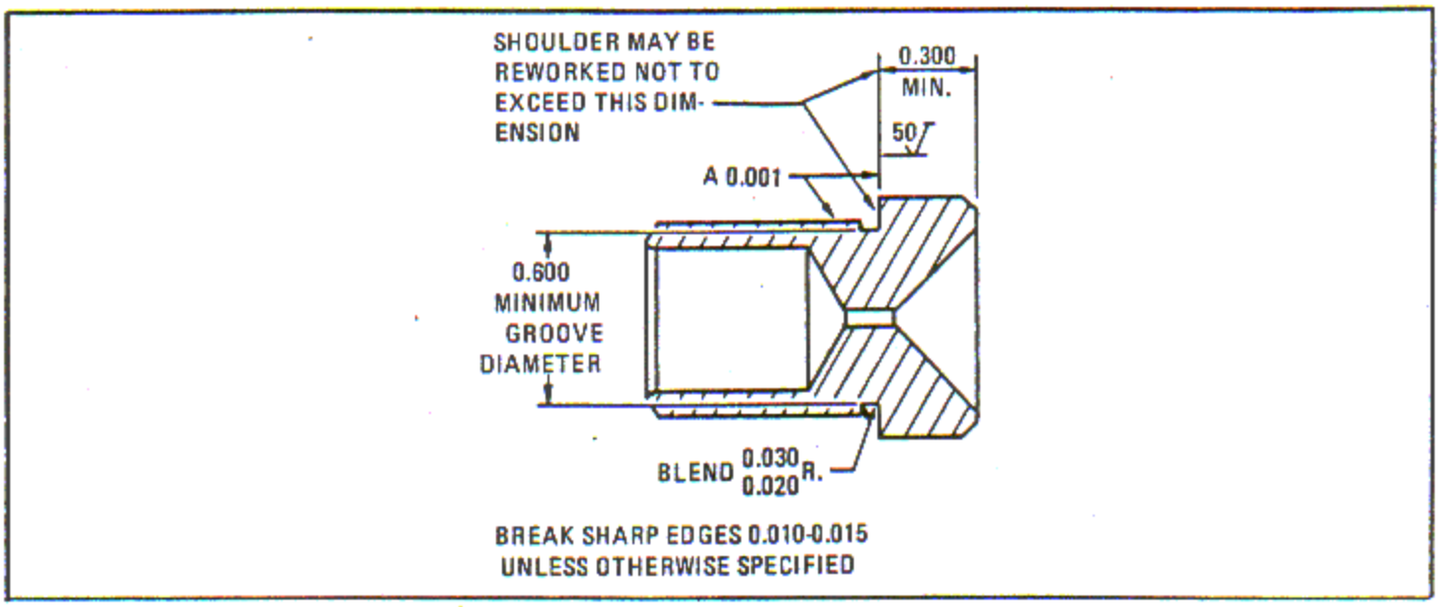

Figure 6-182. Valve Tappet Socket Salvage Reconditioning Limit

c. Housings that do not clean up with the maximum of 0.020 inch material removed are no longer suitable for service use.

d. When machining is required, remove only enough material to true up the surface. Depressions are permissible within one inch of the pilot diameter, and material should not be removed to correct for this condition. Upon completion, only the outermost edge of the mating surface will be true at all points about the periphery.

6-572. MACHINING SUPERCHARGER FRONT HOUSING.

a. Machine the supercharger front housing using standard machine shop practices. The A surfaces must be concentric, parallel, square and true within 0.002 inch full indicator reading at right angles to a common axis. See figure 6-183.

b. Indicate the amount of material removed on the stamping pad under the part number. Use a 1/8 inch metal stamp and steel stamp peen 0.005, 0.010 or 0.020 as applicable. The following list applies to the stamping procedure.

Reference Dimension	Indicate Material Removal
4.862 - 4.677 inches	0.005 inch
4.677 - 4.667 inches	0.010 inch
4.667 - 4.657 inches	0.020 inch

6-573. SUPERCHARGER FRONT HOUSING RECONDITIONING AT DIFFUSER PLATE CONTACT AREA.

6-574. Preparation Prior to Reconditioning.

a. Remove the resin coating from an area extending at least 1/2 inch in all directions around each wear groove and clean the wear groove by vacu-blasting with glass beads.

b. If the wear groove has previously been filled and is to be refilled, remove the resin coating by vacu-blasting. Chip out the old epoxy filler and then clean the wear groove by vacu-blasting again.

c. If removal of the resin coating from the entire housing is required, accomplish this in accordance with paragraph 6-908, then vacu-blast the wear grooves.

d. After vacu-blasting is completed, clean the wear grooves and surrounding area with trichlorethane, Military Specification O-T-620, and allow to air dry.

NOTE

If the resin coating was completely removed from the housing, surface treatment should be accomplished prior to application of the epoxy filler. Refer to paragraph 6-899.

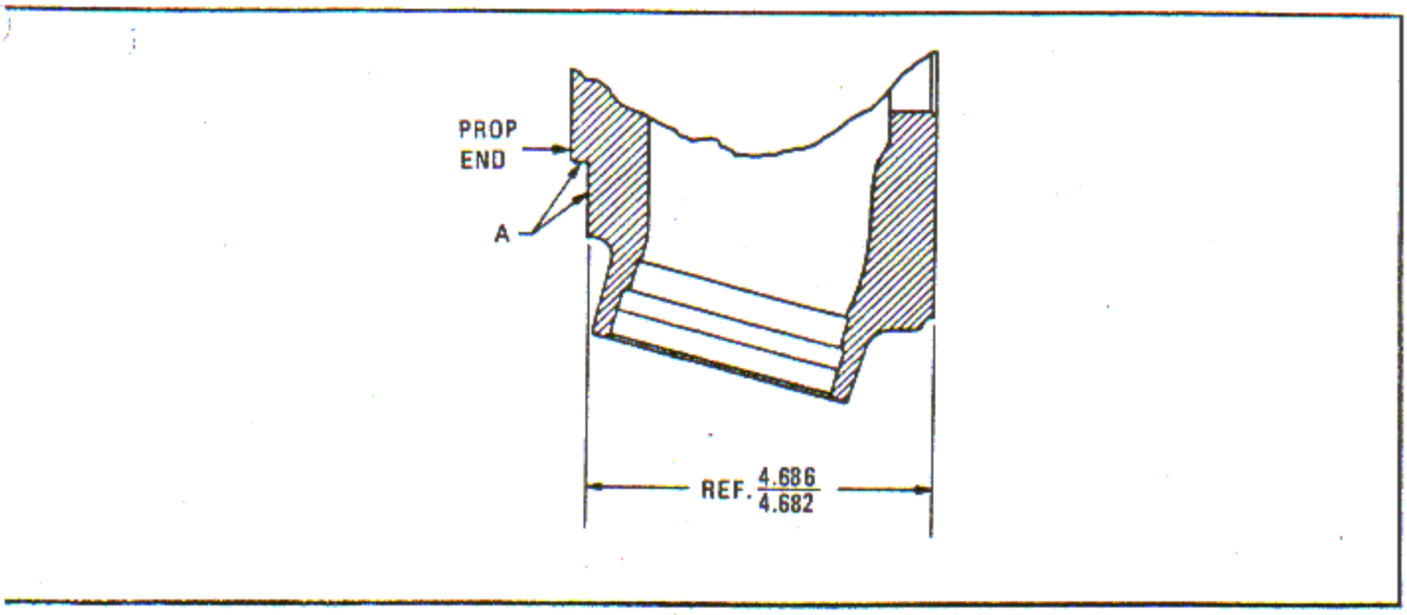

Figure 6-183. Supercharger Front Housing Face Machining

575. Reconditioning Procedures.

a. Fill each wear groove with Bondmaster N620 oxy resin paste, ensuring air bubbles and voids e not present.

b. After filling, carefully smooth the epoxy aterial flush with the housing surface. Wipe off y excess material with a clean rag.

CAUTION

Do not exceed 173°C (350°F) curing temperature.

c. Cure the epoxy filler at either 125°C (260°F) r 24 hours; 148°C (300°F) for five hours, or 3°C (350°F) for two hours.

d. After curing the epoxy filler, surface treat e repaired area in accordance with paragraph 399.

e. Touch-up the filled groove and surrounding cu-blasted area with coating material, Military ecification MIL-R-3043A, in accordance with litary Specification MIL-C-5056 dated January 1948.

6-576. SUPERCHARGER FRONT HOUSING MOUNTING BOLT HOLES REPAIR.

a. Rework supercharger front housings that do not incorporate bushings in the mounting bolt holes in accordance with figure 6-184.

b. Install two bushings in each one of the nine holes.

c. Inspect using fluorescent penetrant method.

6-577. Replace Bushings in Supercharger Front Housing Assembly.

a. Rework supercharger front housings with previously installed bushings by removing the bushing from each one of the nine engine mounting bolt holes and reworking the anti-propeller end of the holes in accordance with figure 6-184.

b. Drill and ream through 0.687 - 0.688 inch to obtain a 50 microinch finish on the anti-propeller end of the bushing bore. Refer to figure 6-184, section A-A.

c. Machine the chamfer on the anti-propeller end of the bushing bore.

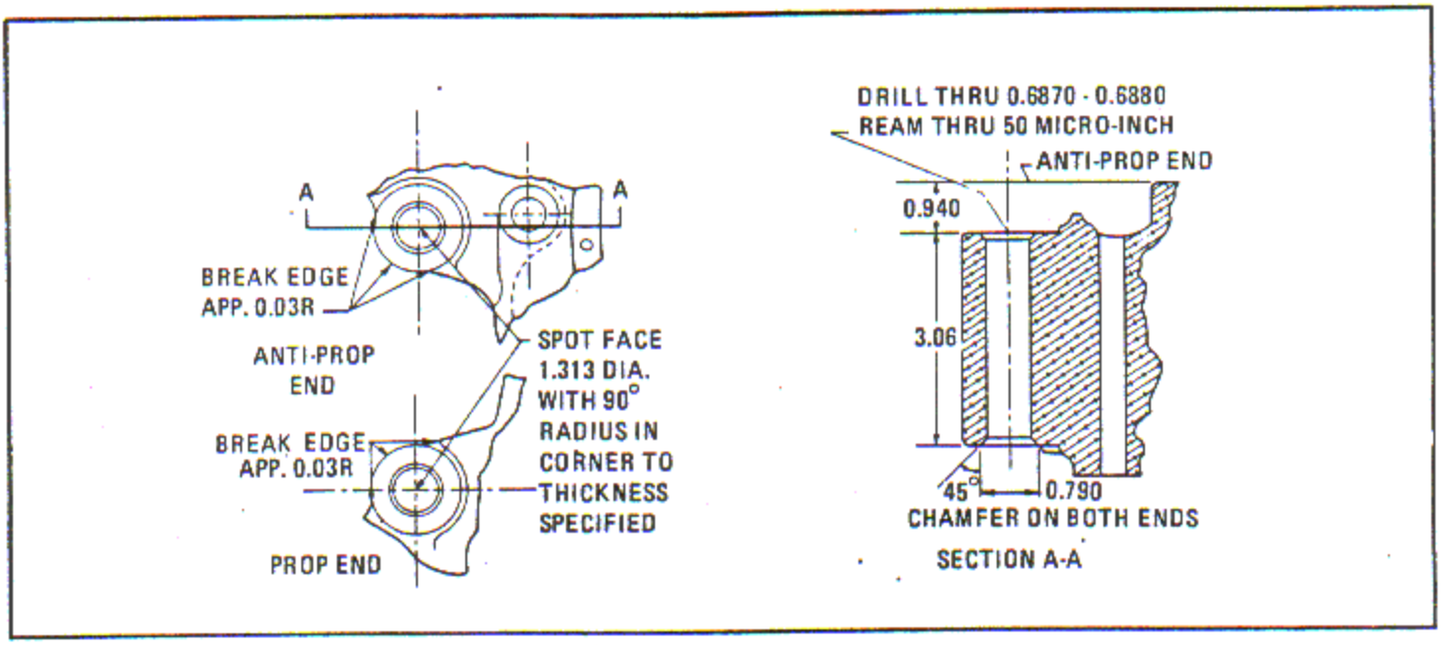

Figure 6-184. Reworking Supercharger Front Housing Assembly

d. Install two bushings in each one of nine reworked holes.

e. Inspect using fluorescent penetrant method.

6-578. SUPERCHARGER FRONT HOUSING WEAR GROOVE REPAIR.

6-579. General. Supercharger front housings that are worn beyond limits caused by contact with diffuser vanes may be repaired using epoxy fill in accordance with the following:

a. Strip resin coat from surface of metal and clean as necessary.

b. Apply dichromate surface treatment as required.

c. Apply Bondmaster M620, using an extrusion gun, to the worn groove areas. Smooth flush with a putty knife.

d. Cure for four hours at 149°C (300°F).

e. Apply resin coat and cure in accordance with standard practice.

6-580. SUPERCHARGER FRONT HOUSING IMPELLER SHAFT BEARING SUPPORT AND SUPERCHARGER REAR HOUSING IMPELLER SHAFT SLEEVE - REPLACEMENT, HONING, OIL SEAL RING FITTING. (See tool groups 66 and 135.)

6-581. Hone Inside Diameter of Front Housing Support.

NOTE

Omit this operation when a new support is to be installed. Refer to paragraph 7-67 for installation procedure.

a. Plug all oil holes and passages with beeswax, Federal Specification C-B-191, or paraffin, Federal Specification VV-W-95.

b. Clamp adapter (4, figure 6-185) to fixture (5) and place on the work table of a drill press or honing machine. Indicate surfaces A and B to be square and true within 0.001 inch full indicator reading with the machine spindle. Clamp the fixture to table and clamp housing securely to the adapter.

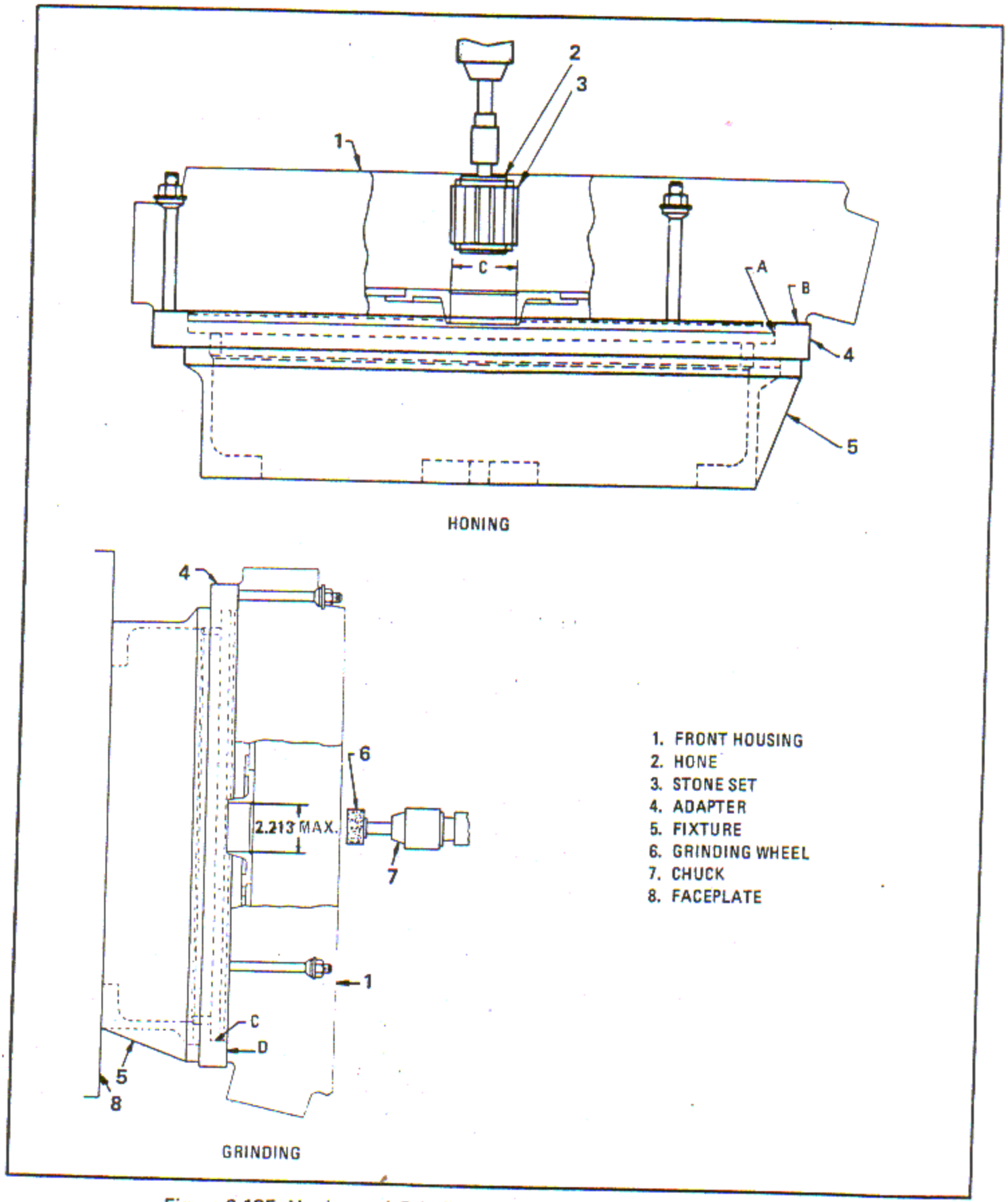

Figure 6-185. Honing and Grinding Inside Diameter of Housing Support

c. Place a hone (2, figure 6-185) equipped with a roughing stone set (3) in the chuck (7). Hone diameter C only enough to clean up the surface, using a spindle speed of 50 rpm and kerosene, Federal Specification VV-K-211, as a lubricant.

d. Replace the roughing stone set (3) with a finishing stone set. Hone, removing only enough metal to obtain a smooth surface.

e. Check the hole with an inside micrometer set with an outside micrometer. The maximum to which diameter C may be honed is 2.202 - 2.203 inches. Stone all sharp corners. Dewax the housing by heating to 135°C (275°F) for 20 minutes. Blow out with kerosene heated to a maximum of 49°C (120°F) and use approximately 20 pounds of air pressure.

NOTE

If the ID of the support has become worn beyond the maximum allowable 2.203 inches diameter, it may be reconditioned as instructed in the following paragraphs.

6-582. Reconditioning Supercharger Front Housing Support.

a. Clamp fixture (5, figure 6-185) and adapter (4) to faceplate of a suitable ID grinder (Heald Machine Works, 1835 Stewart Ave., Springfield, Missouri, or equivalent).

b. Indicate surfaces C and D to be within 0.001 inch full indicator reading. Clamp the housing securely to the adapter.

c. Grind the ID of the support following standard machine shop practice.

NOTE

The maximum ID dimension after grinding is 2.213 inches.

d. Remove the impeller shaft bearing support from the housing when chrome plating the support.

e. Chrome plate support ID. Refer to paragraph 6-865 for chrome plating procedure. Reinstall the support as instructed in paragraph 7-67.

f. Repeat steps a and b and grind the support ID leaving approximately 0.001 inch chrome on ID for honing.

NOTE

Thickness of chrome plate should not exceed 0.005 inch after finish machining.

g. Remove bead of chrome at intersection of ID and 30 degree ID chamfer to blend. The required surface finish on the honed support ID is 8 microinches rms or better, and 50 microinches rms or better on the 30 degree chamfer.

6-583. Fit Oil Seal Ring in Front Housing Support.

a. Select a standard size, a 0.005 inch oversize or a 0.010 inch oversize ring (3, figure 6-186) that will provide gap A, which is 0.010 - 0.012 inch or slightly smaller when assembled in the support (2).

b. File if necessary to obtain this gap dimension.

6-584. Remove Rear Housing Sleeve.

NOTE

If the rear housing sleeve inside diameter is less than 2.203 inches, omit this operation and the operations in paragraphs 6-585, 6-586 and 6-587.

a. Remove the rear housing lock screws and washers.

b. Heat the housing (3, figure 6-187) in an oven with temperature maintained at 107°C (225°F) for 1-1/2 hours.

c. Place the rear housing (3) and collar (2) on an arbor press table. Place plug A (1) in the sleeve and press the sleeve out of the housing.

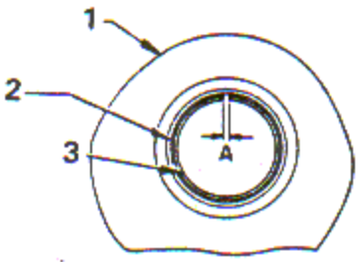

1. FRONT HOUSING
2. SUPPORT
3. OIL SEAL RING

Figure 6-186. Fitting Oil Seal Ring in Front Housing

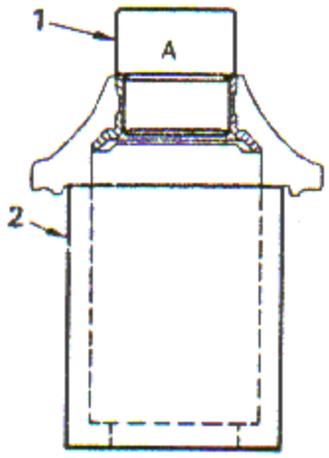

REMOVING SLEEVE

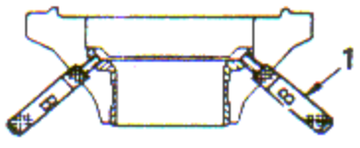

INSTALLING REAR SLEEVE

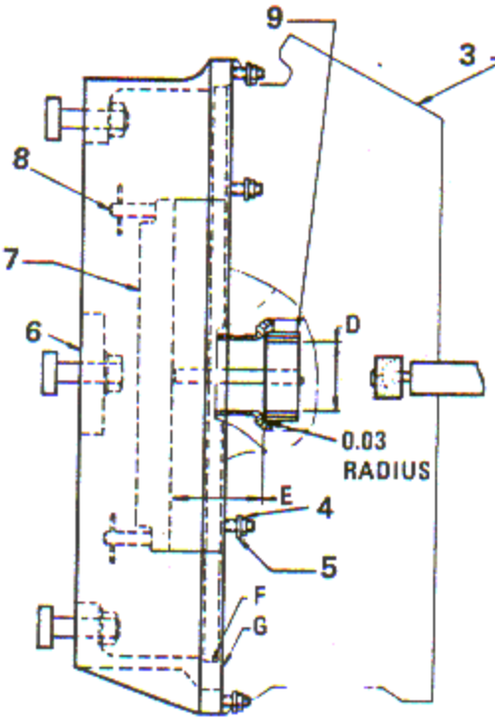

GRINDING AND FACING OFF

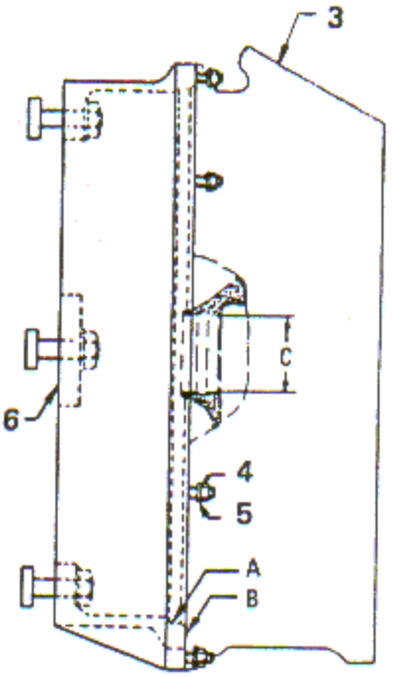

REBORING

1. PLUGS A AND B
2. COLLAR
3. REAR HOUSING
4. FIXTURE NUT
5. FIXTURE WASHER
6. FIXTURE
7. GAGE BAR
8. BAR SCREW
9. FLUSH PIN GAGE

Figure 6-187. Replacement of Rear Housing Sleeve

d. Clean the bore and remove any burrs.

6-585. Rebore Rear Housing Hole for Oversize Sleeve.

NOTE

Omit this operation if the bore is not scored, damaged or a shrink fit of 0.003 - 0.005 inch can be obtained.

a. Plug all holes and passages with beeswax, Federal Specification C-B-191, or paraffin, Federal Specification VV-W-95.

b. Clamp fixture (6, figure 6-187) on the faceplate of a lathe. Indicate surfaces A and B to run true within 0.001 inch full indicator reading.

c. Clamp the rear housing (3) to the fixture (6) with fixture nuts (4) and washers (5).

d. Rebore the hole to diameter C, as indicated in the list following this step.

Oversize	Diameter C
0.005	2.4095 - 2.4085 inches
0.010	2.4145 - 2.4135 inches
0.015	2.4195 - 2.4185 inches

e. Check the hole with an inside micrometer set with an outside micrometer.

6-586. Install Rear Housing Sleeve.

a. Heat the rear housing in an oven with the temperature maintained at 107°C (225°F) for 1.5 hours. Chill the rear housing sleeve, using standard practice, to -57°C (-70°F) or colder.

b. Place the sleeve into the heated housing. Use two plugs B (1) and line up the two tapped holes in the sleeve with the holes in the housing.

c. When the sleeve is tight and in place, remove the plugs.

d. Apply primer (A-4094, Dow Corning Corp., 401 Sylvan Ave., Englewood Cliffs, N.J., or equivalent) to the attaching screw threads and walls of the screw holes and to the attaching screw washers. Allow primer to dry for 45 minutes.

e. Fill the screw holes with compound (Silastic Compound, RTV-731, Dow Corning Corp., 401 Sylvan Ave., Englewood Cliffs, N.J., or equivalent) and immediately insert the screws and washers. After the screws are installed and torqued, the compound must be cured for 24 hours at room temperature.

NOTE

Retaining screw protrusion must be 0.000 - 0.020 inch on the sleeve end.

f. Lockwire the screws.

6-587. Grind Inside Diameter and Face Off Rear Housing Sleeve.

a. Plug all oil holes and passages with beeswax, Federal Specification C-B-191, or paraffin, Federal Specification VV-W-95.

b. Clamp fixture (6, figure 6-187) on the faceplate of an internal grinder or a lathe. Indicate surfaces F and G to run true within 0.001 inch full indicator reading.

c. Clamp the bar (7) on the propeller end of the housing using engine washers and nuts, and clamp the housing (3) to the fixture (6) with fixture nuts (4) and washers (5).

d. Grind the ID of the sleeve to diameter D which is 2.198 - 2.200 inches incorporating a 0.030 inch radius as shown. Check the ground hole with an inside micrometer set with an outside micrometer. Hold dimension to the low limit.

e. Face off dimension E to 2.591 - 2.595 inches and check with flush pin gage.

6-588. Polish Face and Hone Inside Diameter of Rear Housing Sleeve.

a. Clamp fixture (5, figure 6-188) on a drill press or honing machine table and indicate surfaces A and B to run square and true within

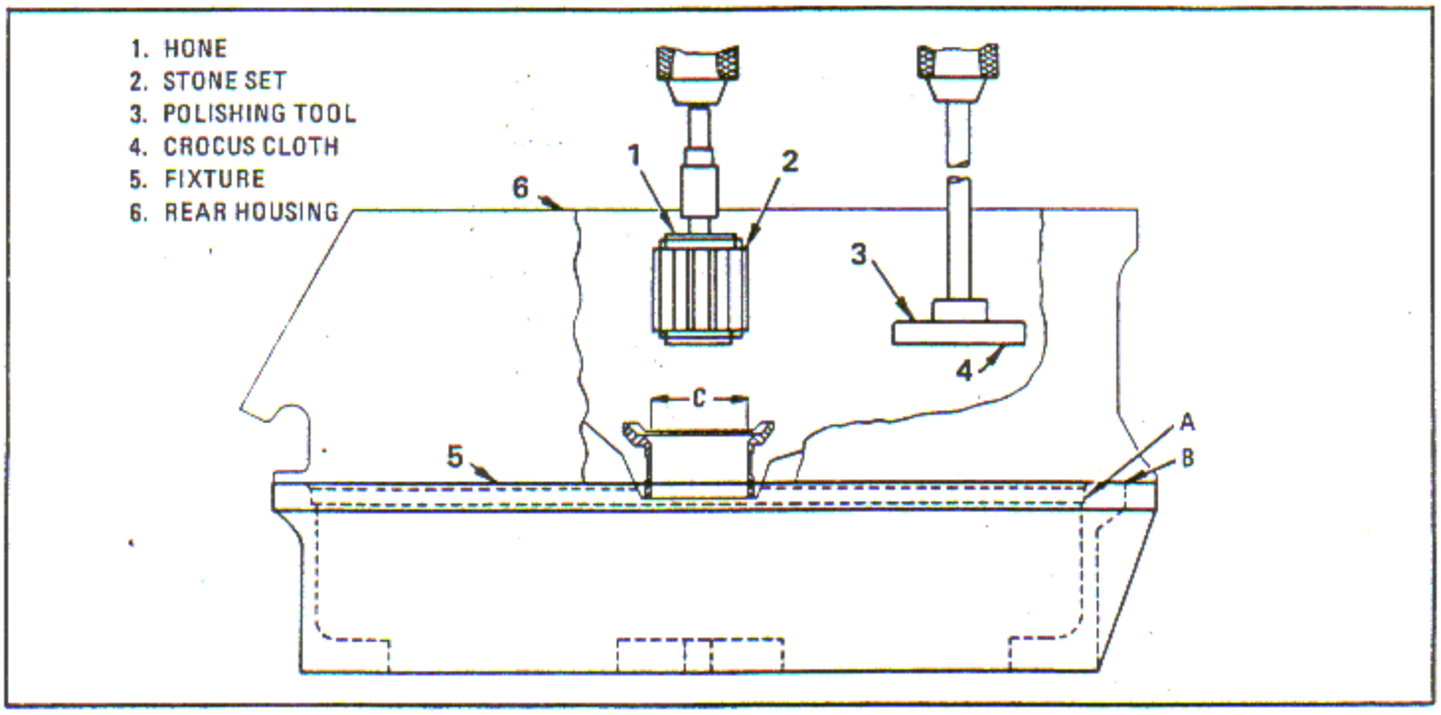

Figure 6-188. Polishing Face and Honing Inside Diameter of Rear Housing Sleeve

0.001 inch full indicator reading with the machine spindle. Fasten the housing (6, figure 6-188) securely to the fixture (5).

b. Place polishing tool (3) in the chuck and attach crocus cloth (4), Federal Specification P-C-458, to the face of the polishing tool with belt dressing or cement. Polish face of sleeve using kerosene, Federal Specification VV-K-211, or petroleum solvent, Federal Specification P-S-661, as a lubricant.

6-589. New Sleeve Installation.

NOTE

If a new sleeve has been installed, follow these instructions.

a. Place hone equipped with finishing stone set in the chuck.

b. Using kerosene, Federal Specification VV-K-211, as a lubricant, hone the inside diameter of the sleeve to dimension C shown in figure 6-188 which is 2.202 - 2.203 inches. Set the spindle for approximately 50 rpm. Check the bore with an inside micrometer set with an outside micrometer and stone all sharp corners. A surface finish of eight microinches rms, or better, is required.

6-590. Refinishing the Old Sleeve.

NOTE

When only refinishing of the old sleeve is required, follow these instructions.

a. Grind the inside diameter of the sleeve to diameter C which is 2.198 - 2.200 inches. Hone to a finish dimension of 2.202 - 2.203 inches. A surface finish of eight microinches rms, or better, is required. Refer to figure 6-188.

b. Dewax the housing by heating to 135°C (275°F) and blow out with kerosene, Federal Specification VV-K-211, heated to 49°C (120°F) under 20 pounds of pressure.

NOTE

If the ID of the sleeve has become worn beyond the maximum allowable 2.203 inches diameter, it may be reconditioned as instructed in the following paragraph.

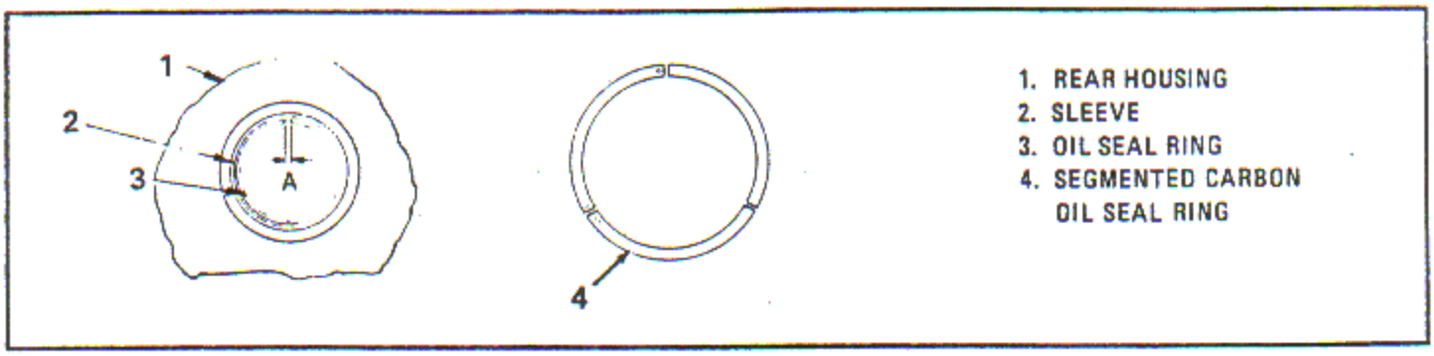

Figure 6-189. Fitting Oil Seal Ring in Rear Housing

6-591. Reconditioning Rear Housing Sleeve.

NOTE

The ID of supercharger rear housing sleeves may be finish machined to standard size, 2.192 - 2.193 inches, provided all evidence of wear is removed. Obtain a surface finish of 8 microinches or better.

a. Clamp fixture and adapter to faceplate of a suitable ID grinder (Heald Machine Works, 1835 Stewart Ave., Springfield, Missouri, or equivalent).

b. Indicate surfaces A and B to be within 0.001 inch full indicator reading. Clamp the housing securely to the adapter. See figure 6-188.

c. Grind the ID of the sleeve to desired diameter following standard machine shop practices.

NOTE

The maximum ID after grinding should not exceed 2.213 inches.

d. Remove sleeve from the rear housing and chrome plate the sleeve ID. Refer to paragraph 6-584 and 6-865.

e. Install the sleeve in the supercharger rear housing. Refer to paragraph 6-586.

f. Repeat steps a and b and grind the sleeve ID leaving approximately 0.001 inch stock for honing.

NOTE

Thickness of chrome plate should not exceed 0.005 inch after finish machining.

g. Remove bead of chrome at intersection of ID and 30 degree and 45 degree ID chamfers to blend.

h. Hone the ID of the sleeve as instructed in paragraph 6-590. The required surface finish on the sleeve ID is 8 microinches rms or better, and 50 microinches rms on the 30 degree ID chamfer.

6-592. Fit Oil Seal Rings in Rear Housing.

a. Select a standard size, a 0.005 inch or a 0.010 inch oversize ring (3, figure 6-189) that will provide gap A which is 0.010 - 0.012 inch, or slightly smaller when assembled in the support.

b. File if necessary to obtain the 0.010-0.012 inch gap. Refer to paragraph 7-38 for segmented ring fitting.

6-593. SUPERCHARGER REAR HOUSING SLEEVE ATTACHING SCREW HOLES AIR TEST. (See tool group 135.)

6-594. Place the supercharger rear housing assembly on the base of fixture. Screw the fixture cap in place at the rear sleeve location, forming an air tight seal. Submerge the assembly in water and test at 10 pounds air pressure. No leakage is permitted.

6-595. FRONT AND REAR IMPELLER SHAFT OIL SEAL SLEEVES GROOVE GRINDING FOR OVERSIZE WIDTHS.

6-596. Regroove Impeller Shaft Oil Seal Sleeves.

a. Locally fabricate holding fixtures for front and rear sleeves using the sleeve face and reference dimensions as shown in figure 6-189 for locating. Refer to figure 6-190 for typical fixture configuration.

b. Mount and clamp the holding fixture (2, figure 6-190) to the faceplate (1) of a suitable universal grinder and indicate the sleeve locating surfaces to run true within 0.005 inch full indicator reading.

c. Assemble and clamp the applicable sleeve to the fixture (2) and indicate the available sleeve surfaces to ensure trueness within the specifications shown. Refer to paragraph 7-38 for segmented ring fitting.

d. Form, dress and true a dish or flaring cup type grinding wheel (Norton 38A60-L8V, Norton Co., 50 New Bond St., Worcester 6, Mass., or equivalent) to suit the ring grooves and incorporate radii as shown.

e. Grind groove faces and blend radii at approximately 5000 surface feet per minute under a copious flow of suitable coolant. Refer to paragraph 6-197 for recommended coolant blend.

NOTE

Grooves are to be ground on an as required basis. It is not necessary to grind all grooves if only one or two require reconditioning.

f. It is recommended that stock be removed equally from both sides of the groove, however, the worn side should be ground first and favored if necessary to ensure clean up of the worn surface. Allow approximately 0.0003 inch of stock for polishing to finish size.

g. Grooves must be ground and polished to oversize width dimensions to suit oversize rings as indicated in the following list. The minimum of 1.925 - 1.915 inch dimension shown in figure 6-190 shall not be exceeded.

Oil Seal Ring Width (Inch)	Sleeve Grooves (Inch)
Standard 0.079 - 0.080	Standard 0.085 - 0.088
+0.005 OS 0.084 - 0.085	0.090 - 0.093 width
+0.010 OS 0.089 - 0.090	0.095 - 0.098 width

h. Break sharp edges, polish the grooves and inspect using standard equipment to ensure compliance with all requirements shown in figure 6-190 and rubber stamp Y size adjacent to the part number for further reference.

6-597. IMPELLER SHAFT BUSHING REPLACEMENT. (See tool groups 67 and 69.)

6-598. Remove Front Bushing.

a. Assemble spacers A through E (6, figure 6-191) and nut (5) on the shaft, selecting the proper narrow spacers to obtain a snug fit on the shaft.

b. The following list indicates spacer applications.

Spacers (narrow)	A for gear end
Spacers (narrow)	B for nut end
Spacer (involute splined)	C
Spacer (short tubular)	D
Spacer (long tubular)	E

NOTE

Omit the instructions in steps c through g if only the rear bushing is to be replaced.

c. Hold the assembly in a vise, clamping the flats provided on the splined spacers. Tighten the nut (5) with wrench, securing the spacers in position. Remove the assembly from the vise.

d. Place four brass pins (7), 1/4 inch diameter by 7/8 inch long, equally spaced between gear teeth and clamp the shaft in a four jaw lathe chuck (8) as shown. Insert plug A in the end of the shaft and engage the tailstock center with the plug (3). Indicate surfaces A and B to run true within 0.001 inch full indicator reading.

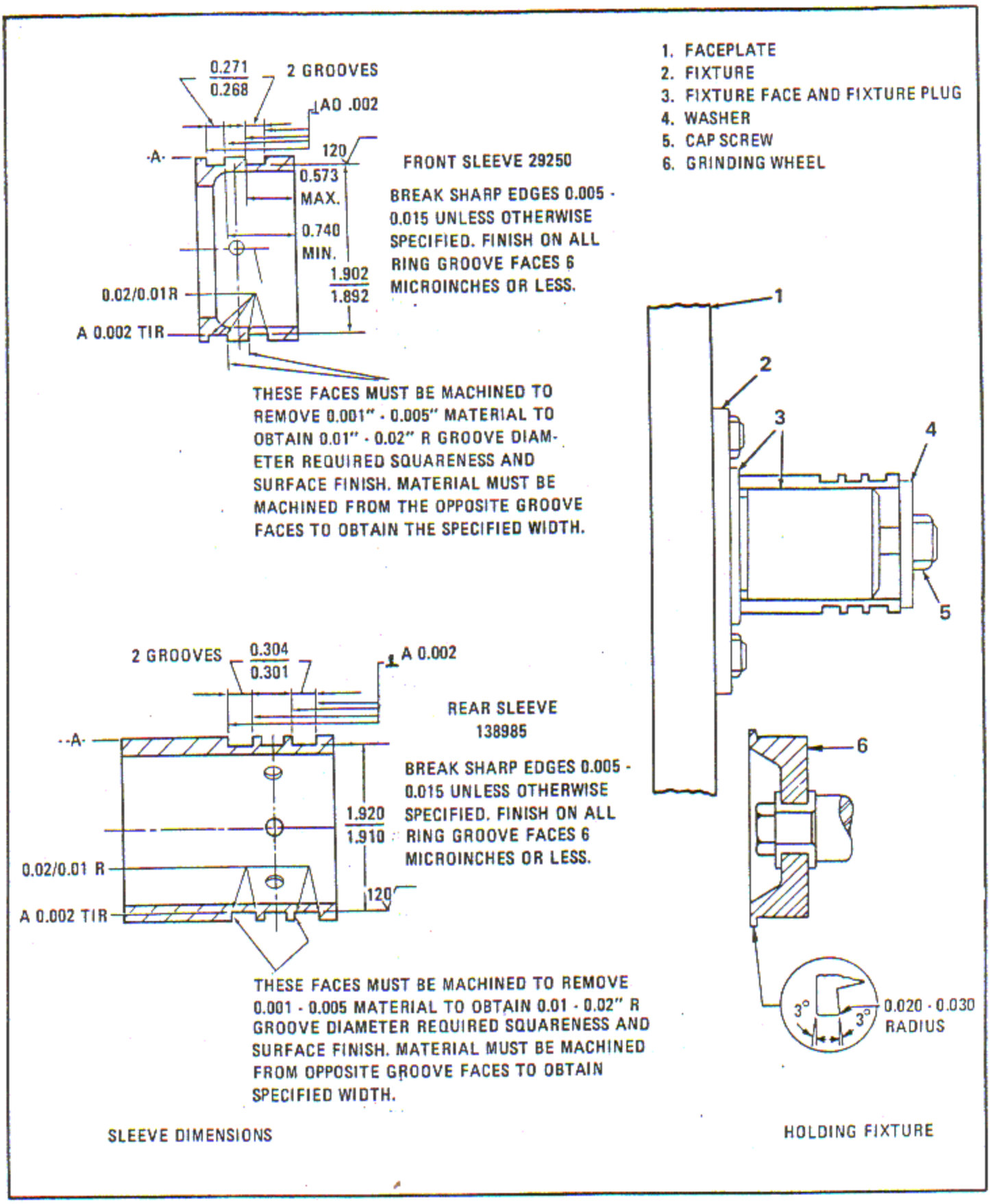

Figure 6-190. Front and Rear Impeller Shaft Oil Seal Sleeve Dimensions and Holding Fixture

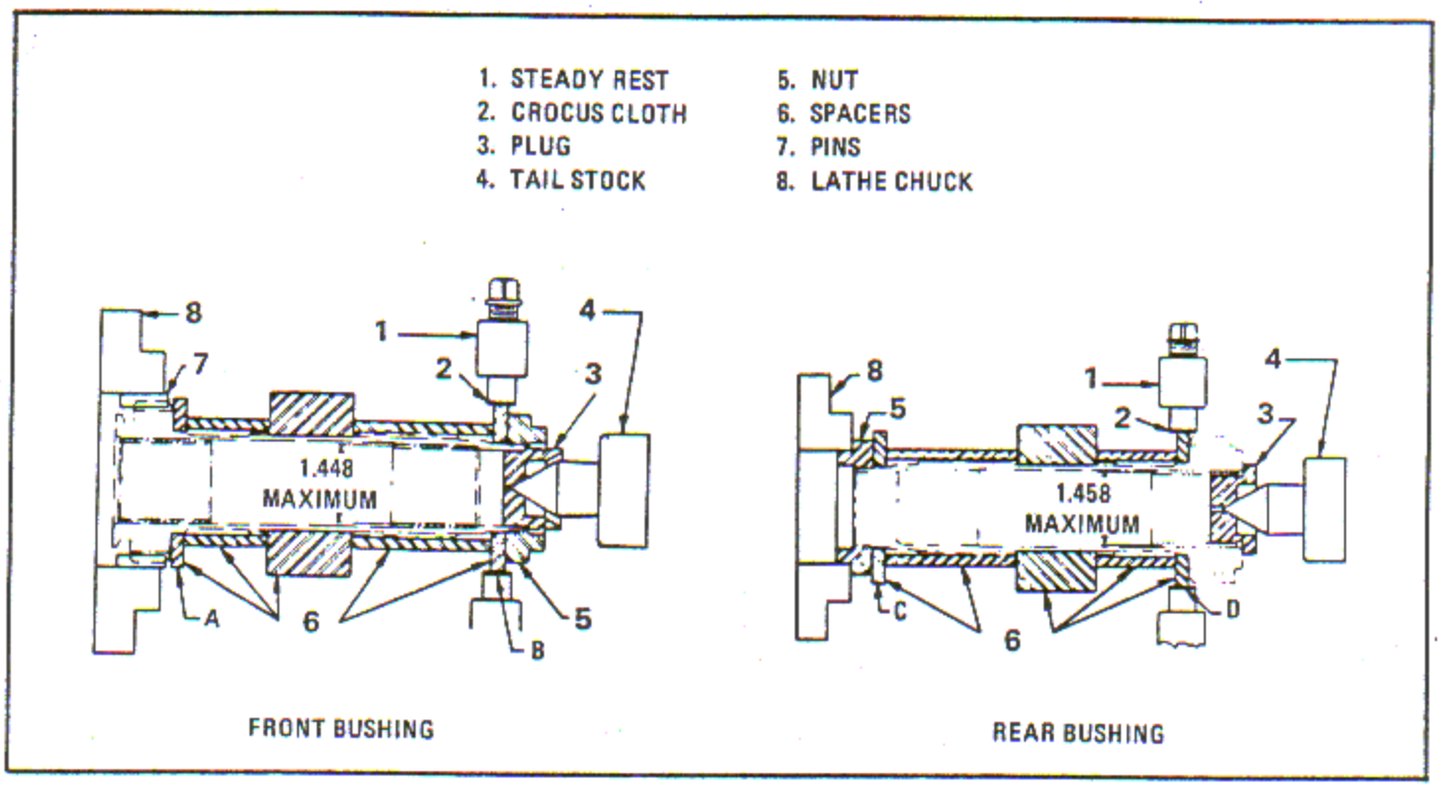

Figure 6-191. Removing Impeller Shaft Front and Rear Bushings

e. Wrap a strip of crocus cloth (2, figure 6-191), Federal Specification P-C-458, smooth side in, around one of the narrow spacers as shown. Clamp the cloth inside the steady rest (1). Adjust the steady rest to support the shaft. Back out the tailstock (4) and remove the plug (3).

f. Bore out the front bushing to the dimension shown. Pick out the remaining shell.

g. Remove the shaft from the lathe without disassembling the spacers and the nut.

NOTE

As an alternate method, fixture NASP Tool No. 73896 may be used in place of the lathe configuration.

6-599. Remove Rear Bushing.

a. Clamp the nut end of the spacer and shaft assembly in a lathe chuck (8, figure 6-191) as shown. Insert plug in the gear end of the shaft and engage the tailstock center in the center of the plug. Indicate surfaces C and D to run true within 0.001 inch full indicator reading.

b. Wrap a piece of crocus cloth (2), smooth side in, around one of the narrow spacers as shown, clamping the cloth inside of the steady rest (1). Adjust the steady rest to support the shaft and spacer assembly. Back out the tailstock (4) and remove the plug (3).

c. Bore out the rear bushing to the dimension shown and pick out the remaining shell.

d. Remove the spacers (6) and nut (5) from the shaft and clean the shaft thoroughly.

NOTE

As an alternate method, fixture NASP Tool No. 73896 may be used in place of the lathe configuration.

6-600. Install Front Bushing.

NOTE

Omit this operation if only the rear bushing is to be replaced.

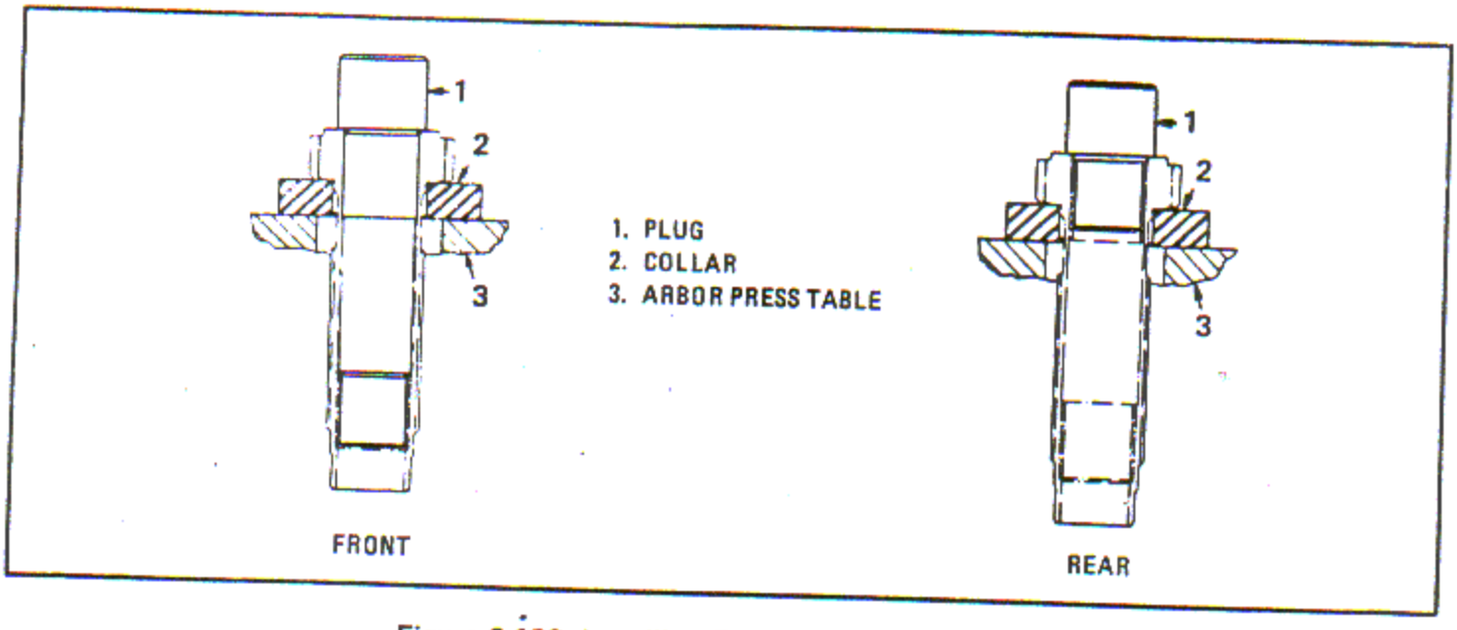

Figure 6-192. Installing Front and Rear Bushings

a. Place a new front bushing on plug B (1, figure 6-192). Chill the assembly in accordance with standard procedures for 10 minutes.

b. Place the shaft in collar (2) and press in the front bushing until the shoulder of the plug contacts the end of the shaft. Maintain the pressure until the bushing is tight.

6-601. Install Rear Bushing.

a. Place a new rear bushing on plug B (1). Chill for 10 minutes in accordance with standard procedures.

b. Place the shaft in collar (2) and press in the rear bushing until the shoulder of the plug contacts the end of the shaft. Maintain the pressure until the bushing is tight.

6-602. Finish Bore Front Bushing.

NOTE

Omit this operation if only the rear bushing is replaced.

a. Apply a light coating of Lubriplate 130A (Lubriplate Corp., 20 Exchange Place, New York, N.Y.) to the threads of the shaft. Assemble the spacers, A through E (7, figure 6-193), and nut (6), selecting the proper narrow spacers to obtain a snug fit on the shaft.

b. Refer to paragraph 6-598, step b, for a list of spacer applications.

c. Hold the assembly in a vise, clamping the flats provided on the splined spacer. Torque the nut to 4000 inch-pounds, using wrench and a torque wrench. Remove the assembly from the vise.

d. Place four brass pins (8) 1/4 inch diameter x 7/8 inch long, equally spaced, in the gear teeth and clamp the gear in a four jaw lathe chuck (9). Insert plug A (3) in the end of the shaft and engage the tailstock center (4) with the plug as shown. Indicate surfaces A and B to run true within 0.0005 inch full indicator reading.

e. Wrap a strip of crocus cloth (2), smooth side in, around one narrow spacer, clamping the cloth inside the steady rest (1). Adjust the steady rest to support the shaft assembly. Back out the tailstock (4) and remove the plug (3).

f. Bore out the bushing to the dimension shown and check with plug gage. Polish sharp edges.

NOTE

As an alternate method, fixture NASP Tool No. 73896 may be used in place of the lathe configuration.

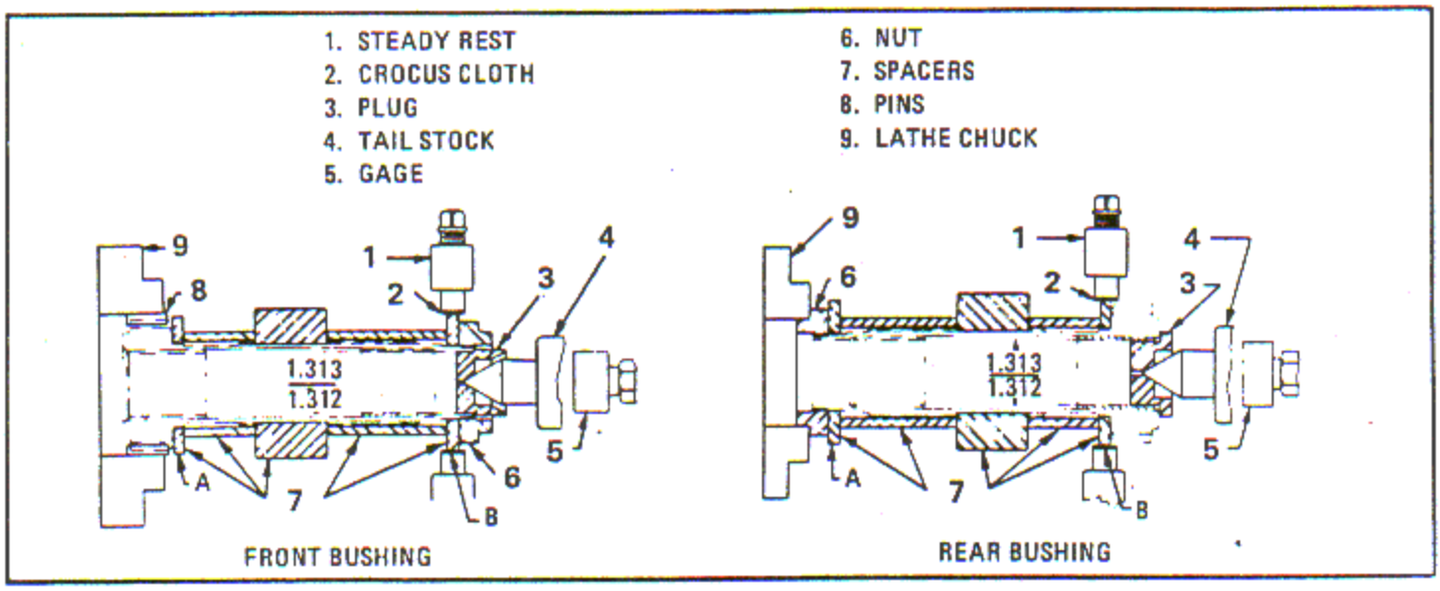

Figure 6-193. Finish Boring Front and Rear Bushings

g. Remove the assembly from the lathe without disassembling the spacers and nut.

6-603. Finish Bore Rear Bushing.

a. Clamp the nut end of the spacer and shaft assembly in the lathe chuck as shown. See figure 6-193. Insert plug A (3) and engage the tailstock center (4) in the center of the plug as shown. Indicate surfaces A and B to run true within 0.0005 inch full indicator reading.

b. Wrap a piece of crocus cloth (2), smooth side in, around one narrow spacer and clamp the cloth inside the steady rest (1). Adjust the steady rest to support the shaft assembly. Back out the tailstock (4) and remove the plug (3).

c. Bore out the rear bushing to the dimension shown and check with gage. Polish sharp edges.

NOTE

As an alternate method, fixture NASP Tool No. 73896 may be used in place of the lathe configuration.

d. Remove the assembly from the lathe and disassemble the spacers and nut. Clean the shaft thoroughly.

e. Using aligning bar, check the front and rear bushing alignment.

6-604. IMPELLER RECONDITIONING AND STATIC BALANCING.

6-605. GENERAL. During engine operation, the supercharger impeller revolves at six to nine times the crankshaft speed. Due to this high velocity, severe strain conditions are set up in the impeller thereby requiring perfect balancing and freedom from surface injuries which might result in failure of the part. It is of the utmost importance to remove and smoothly blend surface injuries and to balance statically the impeller to counteract any unbalance resulting from the repair procedures.

6-606. NICKS OR DENTS. Supercharge impellers which are nicked or dented due to the passage of foreign objects while in operation may be satisfactorily reworked providing:

a. Nicks or dents do not exceed 1/32 inch in depth.

b. No defects permitted on the impeller hub area within a radius of three inches from the hub side.

c. All defects to be hand blended to restore a smooth contoured surface.

6-607. REPAIR. Impellers may be repaired provided the rework limits specified herein are not exceeded. Removal of slight corrosion and the blending of minor scratches, galling or nicks in the hub or splines are limited to the use of crocus

cloth, Federal Specification P-C-458. The impeller inducer section may be replaced whenever the entering edges of the inducer section are damaged irreparably. No machining or fitting is required when the inducer is replaced, but the impeller and inducer must be rebalanced as an assembly.

6-608. DIMENSIONS. The dimensions given in the following list indicate the minimum dimensions after rework for a serviceable impeller. In using the list, refer to the alphabetical letters in figure 6-194.

Outside Diameter Propeller End	A	11.330
Outside Diameter Anti-Propeller End	B	6.430
Blade Height (All)	C	*2.382
Blade Tip Height (Minimum)	D	0.613
Blade Tip Height (Rework Minimum)	D'	0.598
Blade Angle	E	12°50'
Blade Rear Radius	F	0.915

*Material should be removed equally along the entire surface P.

6-609. In addition to reworking the impeller blades to the C dimension, the entering edges of the blades may have local blends not more than 0.062 inch deep and not longer than 1/3 the length of the entering edge. Provide a smooth 0.030 - 0.040 inch radius at the base fillet of the leading edge of the blade, extending outward to a point on the edge one inch from the hub. The remaining portion of this edge should be taper blended ending up with a radius of 0.015 - 0.025 inch at the tip. See figure 6-194. Outer corners N of three blades only may be rounded to maximum radius of 0.125 inch, provided the tip height of the blades has not been reworked below the D dimension. If the tip height is reduced to the D' dimension, the corners of three blades may only be rounded to a maximum radius of 0.110 inch. Small nicks in the side faces of the curved portion L of the blades may be blended. Nicks in the side faces of the straight portion M of the blades may not be blended, and impellers having nicks at this location must be scrapped. After rework, break all sharp edges to a 0.003 - 0.015 inch radius, unless otherwise specified.

6-610. INSPECTION.

a. Check impeller for the proper taper. Place the impeller on a suitable plug that will fit within the 2.600 inches counterbore in the propeller side. See figure 6-194.

b. Indicate the anti-propeller hub side, which must be square and true within 0.001 inch full indicator reading.

c. If the anti-propeller hub side is running true for 360 degrees, check each vane for the required taper within the distance indicated in figure 6-194.

NOTE

The required taper for the vane in 0.003 - 0.007 inch above the hub surface. Impellers that do not have the desired taper or that are not square and true within 0.001 inch, may be reconditioned if the T dimension of 1.855 - 1.882 inches can be maintained.

d. Place the inducer on a suitable plug with the anti-propeller side down.

e. Check for flatness by placing a parallel bar on the propeller side.

NOTE

The inducer must be flat within 0.001 inch across its entire face. The inducer may be reconditioned to correct this out-of-flatness if the T dimension of 1.855 - 1.882 inches can be maintained.

f. Inspect the inducer for hardness on the anti-propeller side of the hub. Lightly stone and polish to remove raised metal from the hardness check indentation.

NOTE

Inducers below the hardness of Rockwell B-50 shall be rejected.

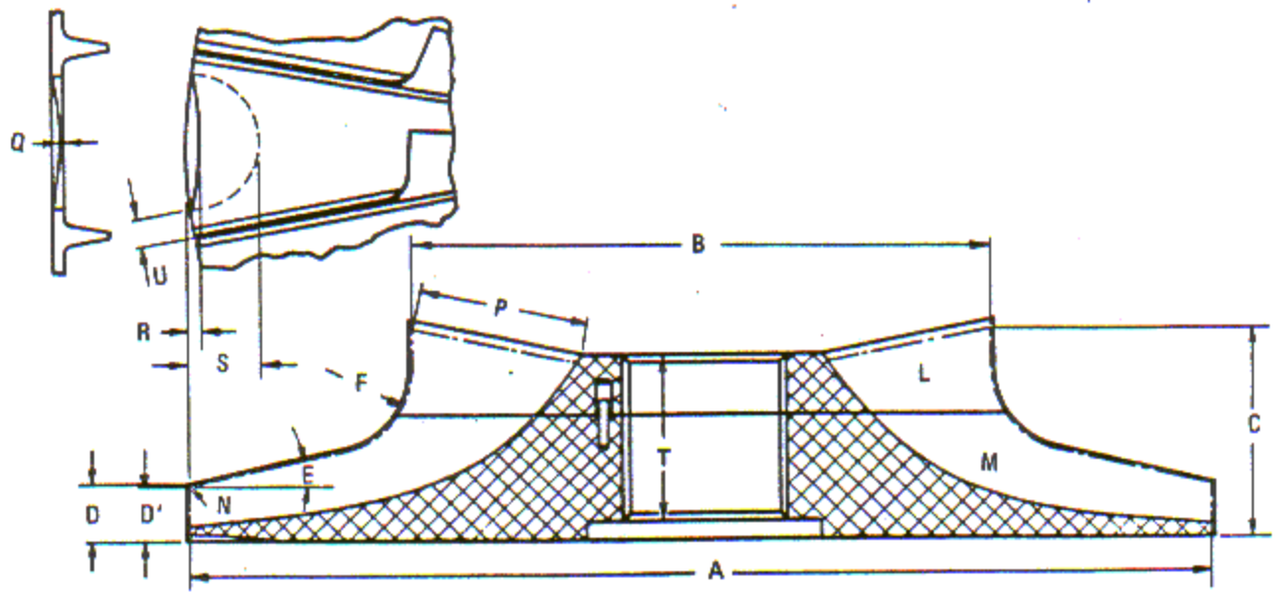

IMPELLER DIMENSIONS

1. PLUG
2. SURFACE PLATE
3. PARALLEL CHECKING BAR

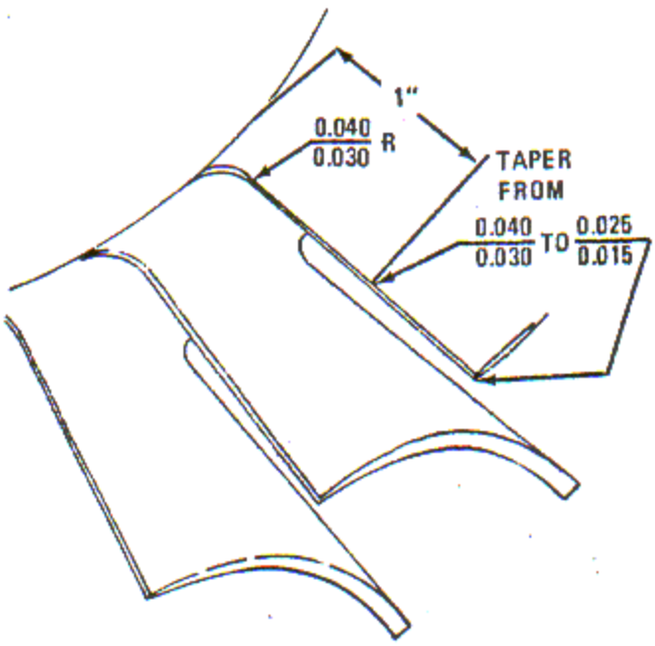

IMPELLER BLADE

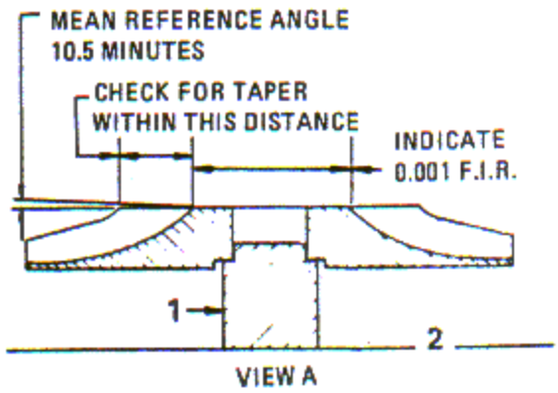

VIEW A

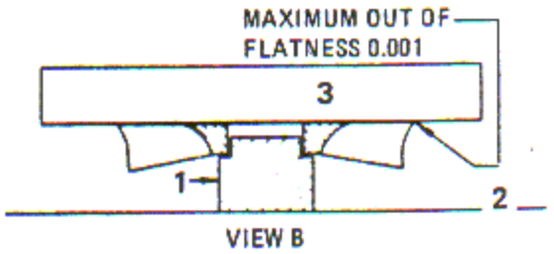

VIEW B

IMPELLER INDUCER

Figure 6-194. Impeller, Impeller Blade and Inducer Reconditioning Limits

g. Check the T dimension of 1.855 - 1.882 inch. This dimension must be obtained with the gap, contributed by the taper, eliminated. See figure 6-194.

6-611. INSPECTION AND REWORK OF INDUCER AND BLADES. The following inspection and rework are to be performed after corrosion preventative treatment and prior to assembly of the inducer.

a. Examine the inducer blades and the roots of the blades for pitting or etching using 10 power magnification. The most critical area is believed to be from the root outward for approximately one-half inch on each blade. Reject all inducers containing pitting or etching in this area.

NOTE

Inducers exhibiting light pitting or etching in other than the critical area may be reworked as outlined in steps b and c.

b. Vacu-blast the entire inducer using 270 mesh glass beads. The purpose of this procedure is to minimize the effects of pitting or etching.

c. Reanodize and inspect all reworked inducers in accordance with the foregoing instructions. Anodizing of inducers must be conducted prior to the inspection. No visible pitting or etching will be permissible. Parts failing this examination are unfit for further service and shall be disposed of in accordance with existing instructions.

6-612. Impeller and Inducer Mating Surface Reconditioning.

a. Remove the locating pins from the impeller.

CAUTION

Ensure the impeller will not move on the arbor during the machining operation.

b. Mount the impeller on a suitable snug fitting arbor or expanding type bushing.

c. Place the impeller and arbor on a suitable lathe to machine the vane side of the impeller.

d. Indicate the counterbored face to run true and square within 0.001 inch full indicator reading.

NOTE

Provide space on the arbor to permit tool bit clearance and indicator clearance. Cut from spline area across the hub face using the lathe cross-feed.

e. Set the lathe compound to machine within the required taper from the hub area outward to the vane tips as shown in figure 6-194. The mean reference angle is 10.5 minutes.

f. Using a work speed of approximately 125 rpm, machine the required amount of material from the impeller. A surface finish of 50 microinches rms is required.

g. Break sharp edges 0.005 - 0.015 inch approximate radius.

h. Reinstall the locating pins in the impeller.

i. Mount the inducer on a suitable arbor. Place the inducer and arbor in a suitable lathe. As an alternate procedure, the inducer may be mounted on a suitable fixture and ground to the following requirements and limitations.

j. Indicate hub face to run square and true within 0.001 inch full indicator reading.

k. Using a work speed of approximately 48 rpm, machine the face of the inducer, as required, to provide a flat surface.

l. A surface finish of 50 microinches rms is required.

m. Break all sharp edges 0.005 - 0.015 inch approximate radius.

n. Touch up the machined surface using alodine treatment described in paragraph 6-898.

o. Check the T dimension with the impeller and inducer assembled. The gap contributed by the impeller taper should be subtracted from the measured dimension. The T dimension is 1.855 - 1.882 inches.

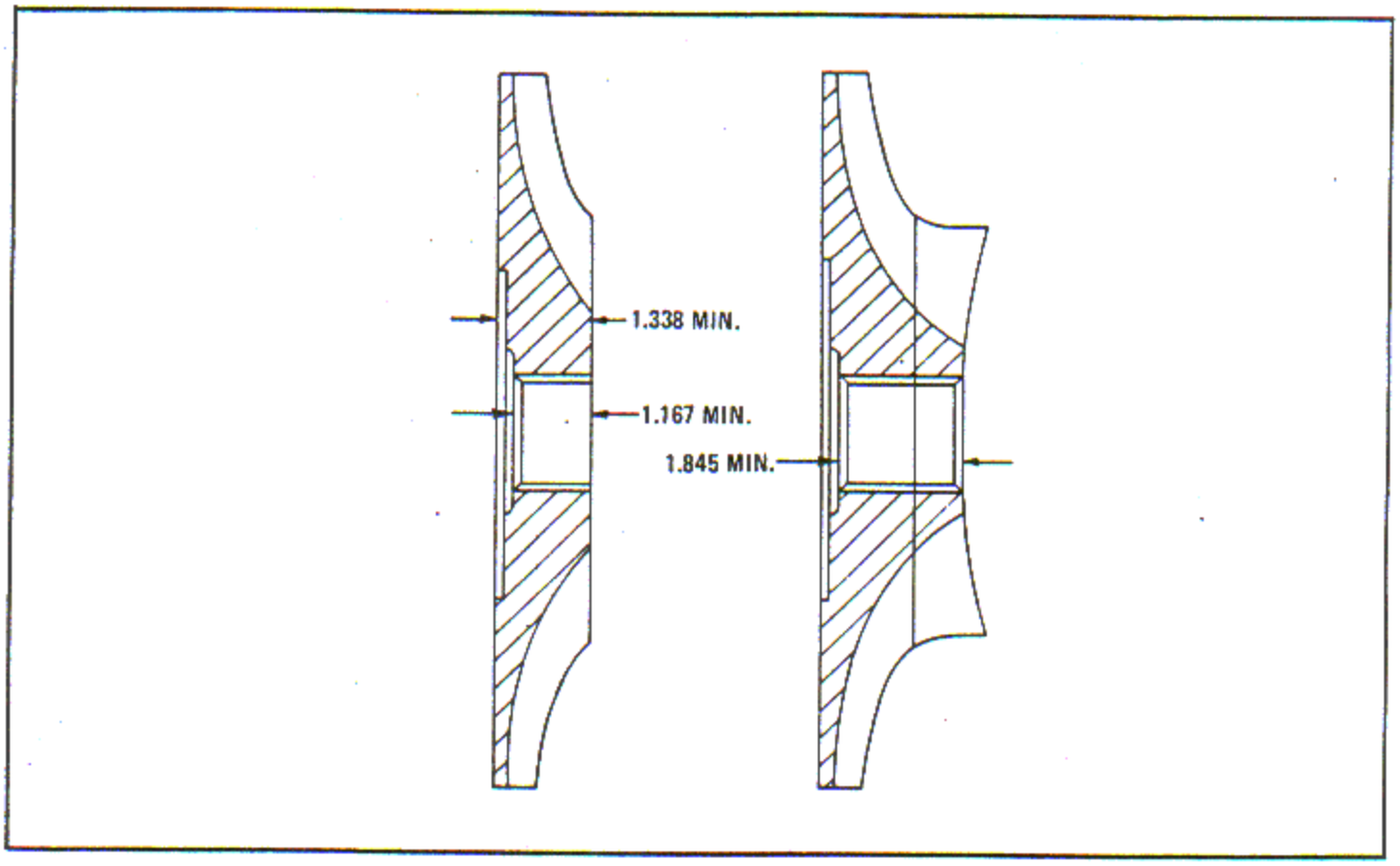

Figure 6-195. Machining and Balancing Assembly Dimensional Limits

6-613. Impeller and Inducer Assembly Dimensional Limits.

a. Examine all impeller machining and balancing assemblies for conformance with the dimensional requirements shown in figure 6-195.

6-614. Balancing.

a. The impeller and inducer are checked for balance as a unit. Material must be removed from the heavy side of the impeller until the assembly is properly balanced. Check dimension T which must be 1.855 - 1.882 inches.

b. To balance, insert a suitable arbor in the impeller hub and check static balance on static balancing ways as shown in figure 6-196. Correct unbalance by removing material from the front of the impeller at dimension Q to a minimum of 0.030 inch; at dimension U to a minimum of 0.300 inch; and at dimension S to a maximum of 0.750 inch until residual static unbalance is within 0.16 grams measured at the impeller outside diameter. Use a Gisholt Balancing Machine, (Gisholt Machine Co., Madison 10, Wisconsin) or equivalent.

c. The contour thus formed must be centered within 0.030 inch between the vanes. If the impeller still does not balance and the same side is still heavy, remove more material by machining scallops at R to a maximum of 0.120 inch.

d. If more material must be removed, a cut-out and scallop may be machined centrally within 0.030 inch between each of the adjacent vanes until dimensions Q, R, S and U are reached.

e. After balancing to prevent mixing of parts, stamp mating numbers on the contacting surfaces of the impeller sections, midway between the hub splines and the base of the vanes. Remove the raised edges of the metal.

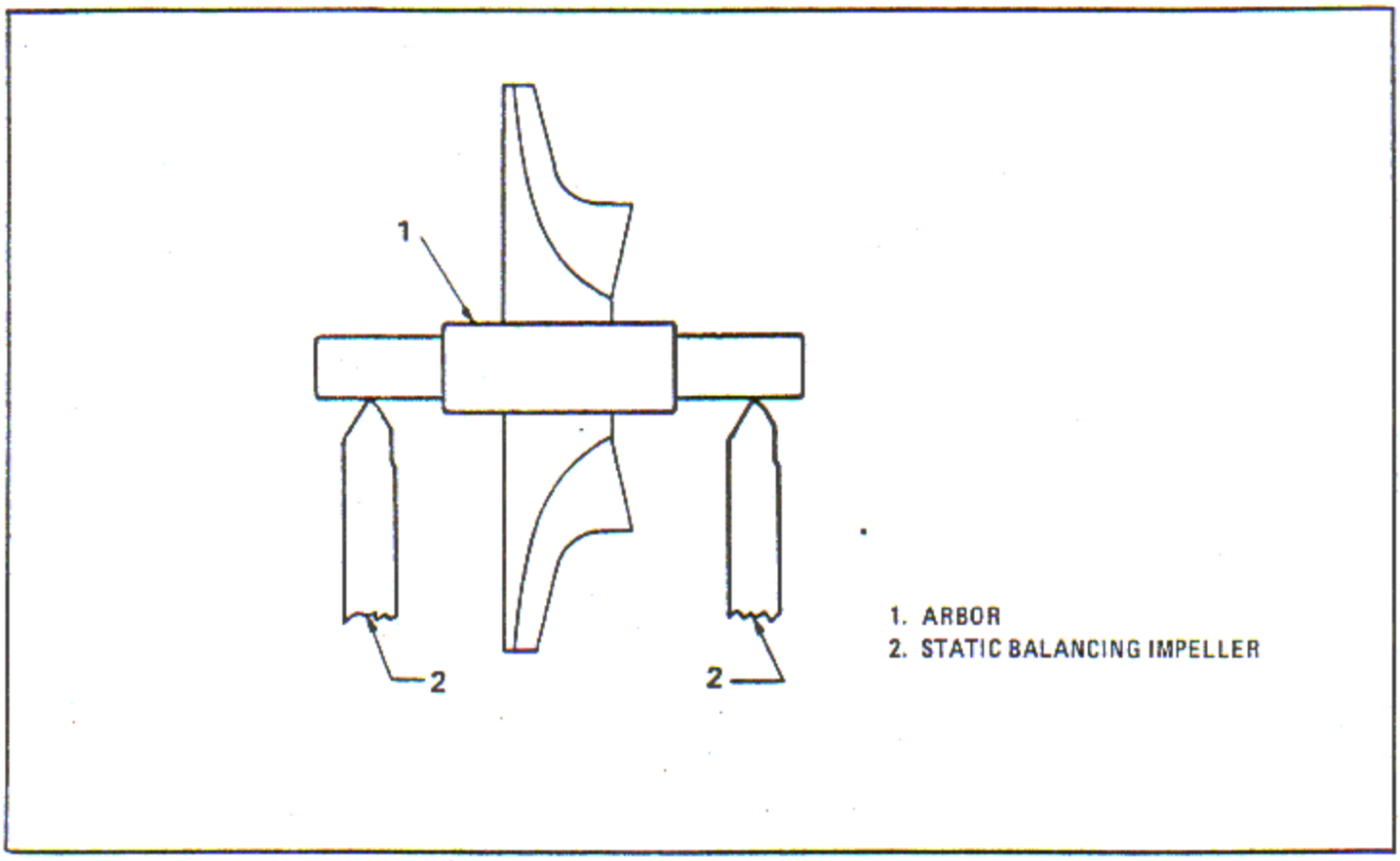

Figure 6-196. Method of Static Balancing the Impeller

6-615. SUPERCHARGER REAR HOUSING CARBURETOR MOUNTING PAD SALVAGE.

6-616. PROCEDURE. Adhere to the following instructions for salvaging of supercharger rear housings due to worn carburetor mounting pads.

a. Remove all the carburetor mounting pad studs. Refer to paragraph 6-617.

b. Machine the mounting pad surface to clean it up. The maximum material removal limit is 0.080 inch. Remove only enough material to clean up the mounting pad. See figure 6-197 for applicable dimensions.

c. The 90 degree countersink on the stud holes will only be partially removed. It will not be necessary to recondition the stud holes, however, the sharp edges must be broken to a 0.010 - 0.015 inch radius.

d. Maintain a stud height of 1.410 ± 0.010 inch on installation.

NOTE

The metering characteristics of the carburetor will not be affected.

6-617. CARBURETOR ADAPTER ATTACHING STUD REPLACEMENT. (See tool group 136.)

6-618. Remove Broken Stud.

a. Clamp a suitable jig on the pad with nuts. Place a 1/8 inch bushing over the broken stud and drill through with drill. Do not drill into the bottom of the stud hole. Remove the bushing and drill.

b. Place a 1/4 inch bushing in the jig and enlarge the hole in the stud using a 1/4 inch drill. Remove the drill and bushing.

c. Place a 9/32 inch bushing in the jig and redrill the hole in the stud using a 9/32 inch drill. Remove bushing, drill and jig.

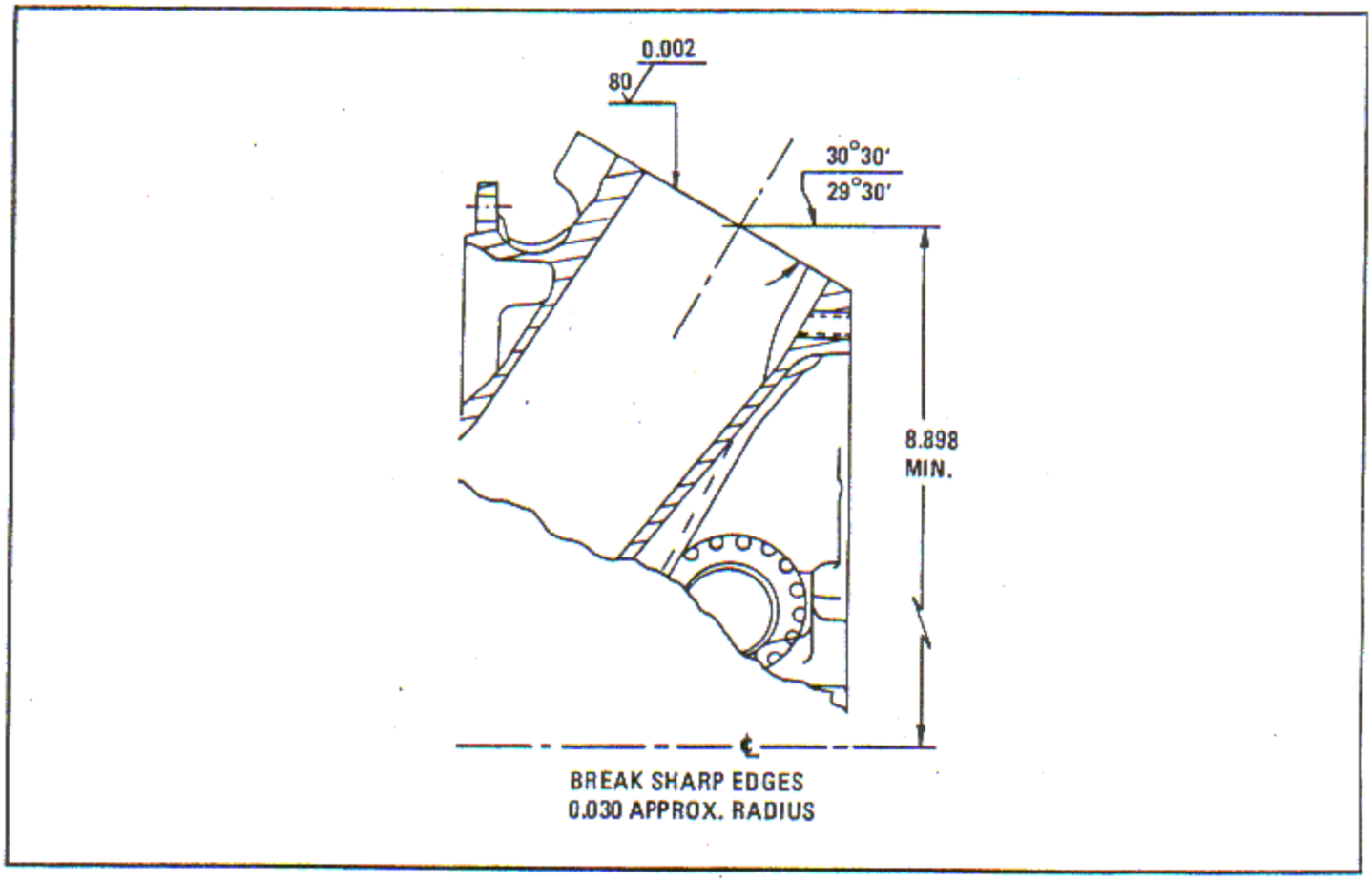

Figure 6-197. Carburetor Mounting Pad Salvage

d. Drive removing tool into the hole in the stud and remove the broken stud with a tap wrench.

6-619. Remove Bent or Loose Studs.

a. Place adapter in remover and puller. Place adapter on stud and drive it down over the threads. Remove stud by turning stud remover with a wrench.

b. If threads in the case pick up and stud remover cannot be turned, remove stud remover from the adapter. Place stud remover block and puller on adapter. Screw puller into stud remover block and remove adapter from the stud. Cut off stud close to case and remove stud as outlined in paragraph 6-618.

6-620. Retap for New Stud. When replacing a stud with another stud of the same size, run the proper size tap into the hole to clean up the threads without removing any metal. When retapping for the next oversize stud, use next oversize tap. Tap hole using the proper coolant blend, refer to paragraph 6-197. Use a suitable jig with the proper bushing.

6-621. Install New Stud.

NOTE

Unless otherwise specified, a small quantity of anti-seize compound composed of (by weight) 75 per cent petrolatum, Federal Specification VV-P-236, melting point 49 - 60°C (120 - 140°F) and 25 per cent graphite, Federal Specification SS-G-659, (powdered flake) shall be applied to the stud threads. Use compound sparingly by covering sides of the threads with a thin layer. Avoid excessive use of compound, especially in blind holes.

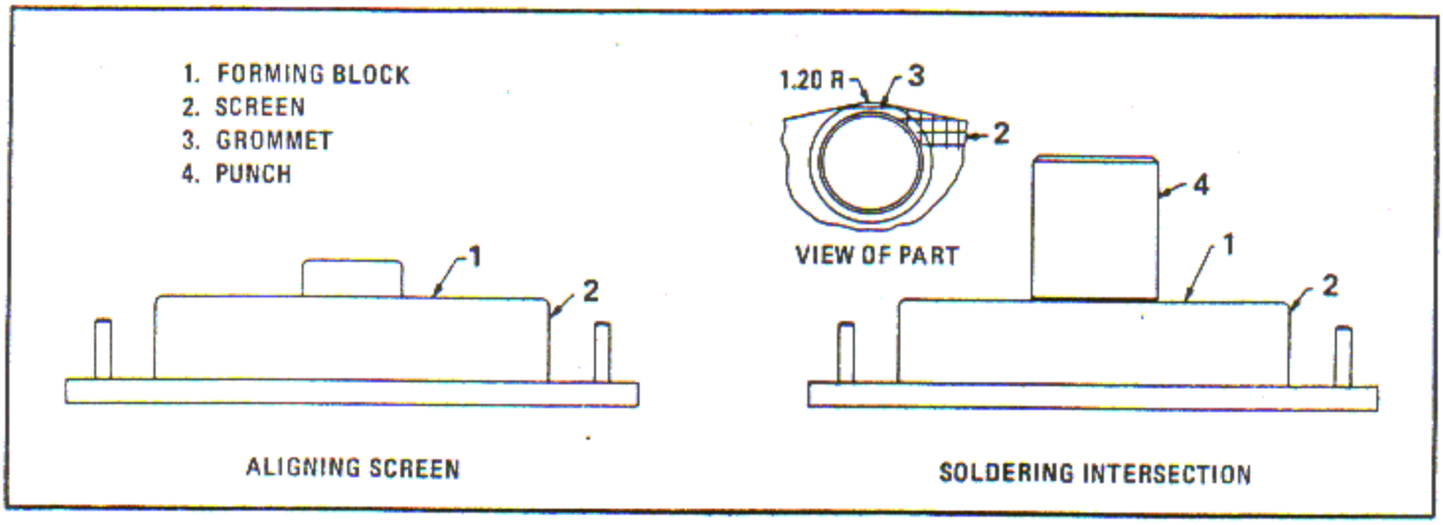

Figure 6-198. Aligning Carburetor Air Inlet Screen and Soldering Intersection

a. Drive stud with the proper stud driver and collet and pin to height of the original stud.

b. Torque with wrench to value specified in the Table of Tightening Torque Values, Section IX. If proper torque and height are not obtained, remove stud and select another stud as a replacement.

6-622. CARBURETOR AIR INLET SCREEN RECONDITIONING. (See tool group 12.)

6-623. Remove Broken Grommet.

a. Cut out the ID of the grommet using a midget mill (Tool No. ELA, Cat. No. 21, Severance Tool Industry, Inc., Saginaw, Michigan, or equivalent) mounted in a suitable rotary hand tool.

b. Unsolder the grommet pieces from the screen wires and remove all excess solder.

c. Vapor blast to clean the screen and frame. Ensure all gasket pieces, grease and carbon deposits are removed.

6-624. Air Inlet Screen Alignment.

a. Check screen alignment by placing the screen (2, figure 6-198) on forming block (1) as shown, exercising care not to bend the screen wires excessively.

NOTE

Any screen with broken wires is to be scrapped.

b. Carefully align the screen wires around the grommet hole ensuring the wire ends are in position to be retained by the grommet.

6-625. Solder Screen Grommet and Wire Intersections.

NOTE

All soldering to be accomplished in accordance with AMS-4750.

a. Assemble the grommet (3, figure 6-198) with the flat edge inside the screen (2) at the 1.200 inch radius screen corner as shown.

b. Pre-solder the wire ends to the grommet.

c. Place the screen (2) on forming block (1) and place together in a suitable arbor press. With female die punch (4), swage the grommet (3) onto the screen.

d. Soft solder the grommet to the screen wires.

e. Check the screen wire intersections and re-solder all loose wires. The wires must be secure at all intersections.

f. Hot water rinse the screen to remove solder flux.

g. Vapor degrease.

6-626. SUPERCHARGER REAR HOUSING DRAIN VALVE EXTENSION TUBE REPLACEMENT. (See tool group 128.)

6-627. Remove Old Tube.

a. Insert bushing (2, figure 6-199) in the housing.

b. Drill out the tube using drill (1).

c. Pick out remainder of the tube.

6-628. Tap for New Tube.

a. Tap a new hole using tap and lard oil, Federal Specification C-O-376. Blow out chips and oil.

6-629. Expand Tubing.

a. Mount fixture (5, figure 6-199) on the housing with a bolt through the impeller shaft rear oil seal sleeve hole.

b. Insert a new tube in the tapped hole. Swing the fixture (5) so the side of the tube is flat against the fixture and the end of the tube is against the pins. Clamp the tubing snugly and then clamp the fixture tightly.

c. Insert the bushing of bushing (2) and collar (4) in housing as shown. Expand the tubing in the hole using roughing and finishing spinning tools (3), consecutively, locating the stop collar or bushing and collar to the dimension shown. Use white lead, Federal Specification TT-W-251, on the spinning tools as a lubricant.

6-630. Remove Excess Metal from End of Tube.

a. Insert the bushing of bushing (2) and collar (4) in the housing and locate the collar on drill (1) as shown.

b. Remove excess metal resulting from elongation of the tubing in the spinning operation by drilling until the collar contacts the bushing.

6-631. Drill and Tap Clip Retainer Screw Hole.

NOTE

If a heli-coil insert has been installed, remove it prior to drilling.

a. Drill through the supercharger rear housing at the existing tube and clip assembly retaining screw hole using a 0.2040 - 0.2094 inch diameter drill.

b. Countersink both ends of the hole to a 0.270 - 0.290 inch diameter and a 120 degree included angle.

c. Tap the entire length of the hole for a 1/4 - 20 UNC-3B thread.

d. Drill through the retaining screw hole in the clip using a 0.2570 inch diameter drill. Remove all burrs.

6-632. SUPERCHARGER REAR HOUSING OIL SEAL VENT TUBE REPLACEMENT. (See tool group 134.)

6-633. Vent Tube Removal.

NOTE

This and the following instructions may be accomplished by utilizing a radial press incorporating an adjustable angle block table, or as a bench operation using a high speed electric drill.

a. Remove the supercharger oil seal vent tube breather from the housing. Install drill bushing (2, figure 6-200) in the breather location. Using a standard 9/32 inch straight shank drill (Catalog No. 464, Whitman and Barnes, Plymouth, Mich., or equivalent) drill out the vent tube end to a depth sufficient to pass through the threaded area as shown.

b. Remove the drill (1) and drill bushing (2). Using pliers, unscrew the worn tube from the housing.

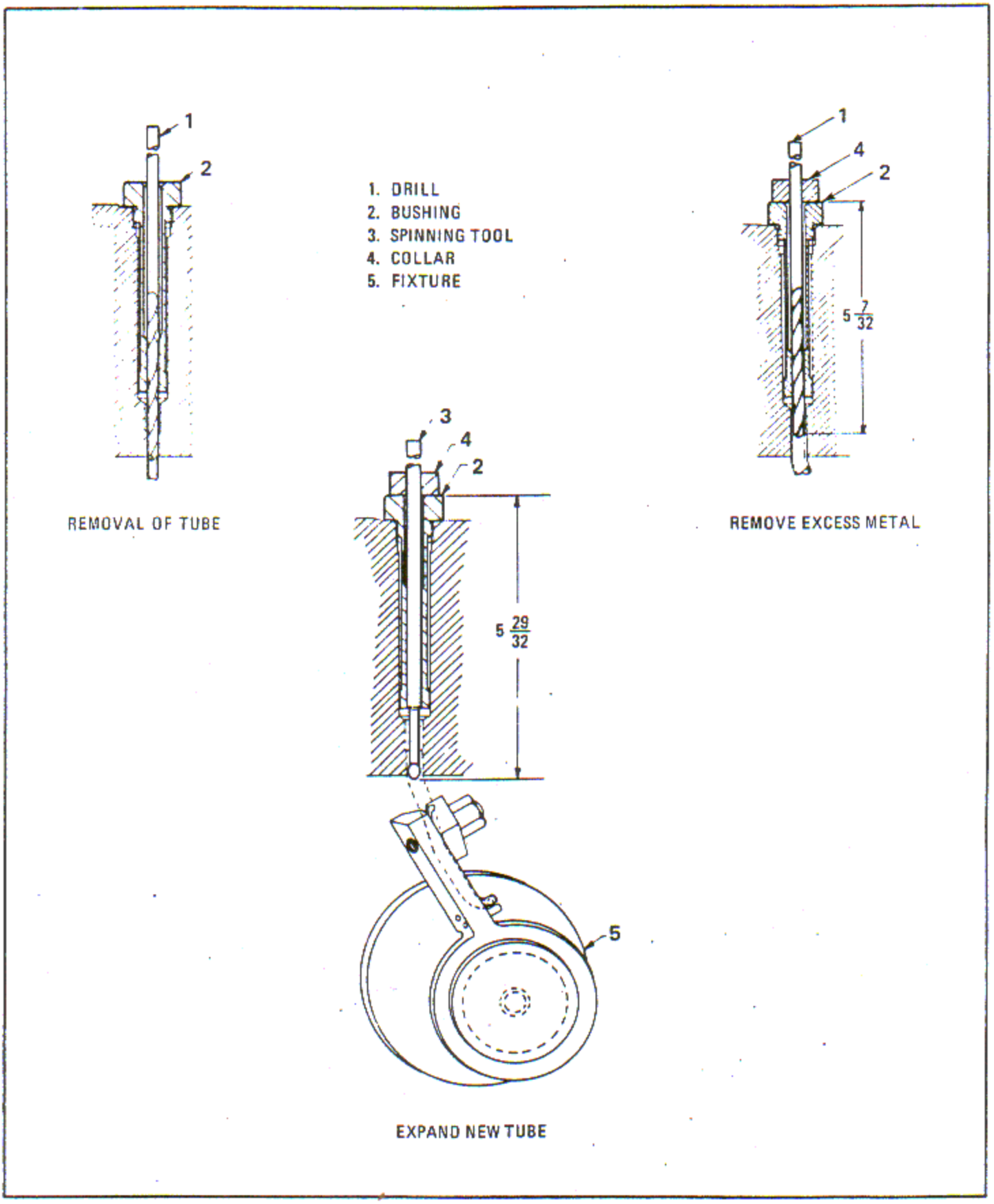

Figure 6-199. Drain Valve Extension Tube Replacement

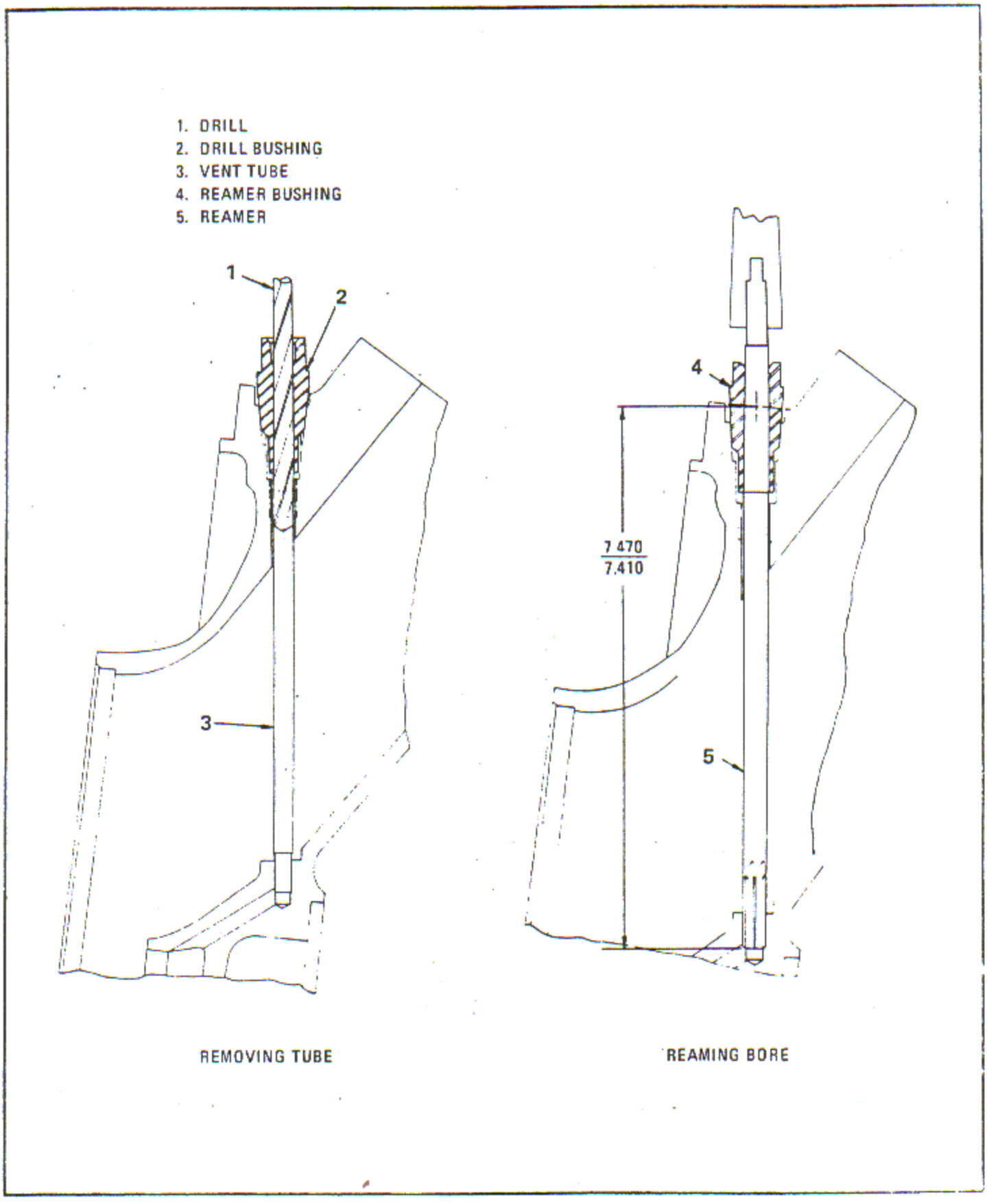

Figure 6-200. Removing Oil Seal Vent Tube and Reaming Diaphragm Bore

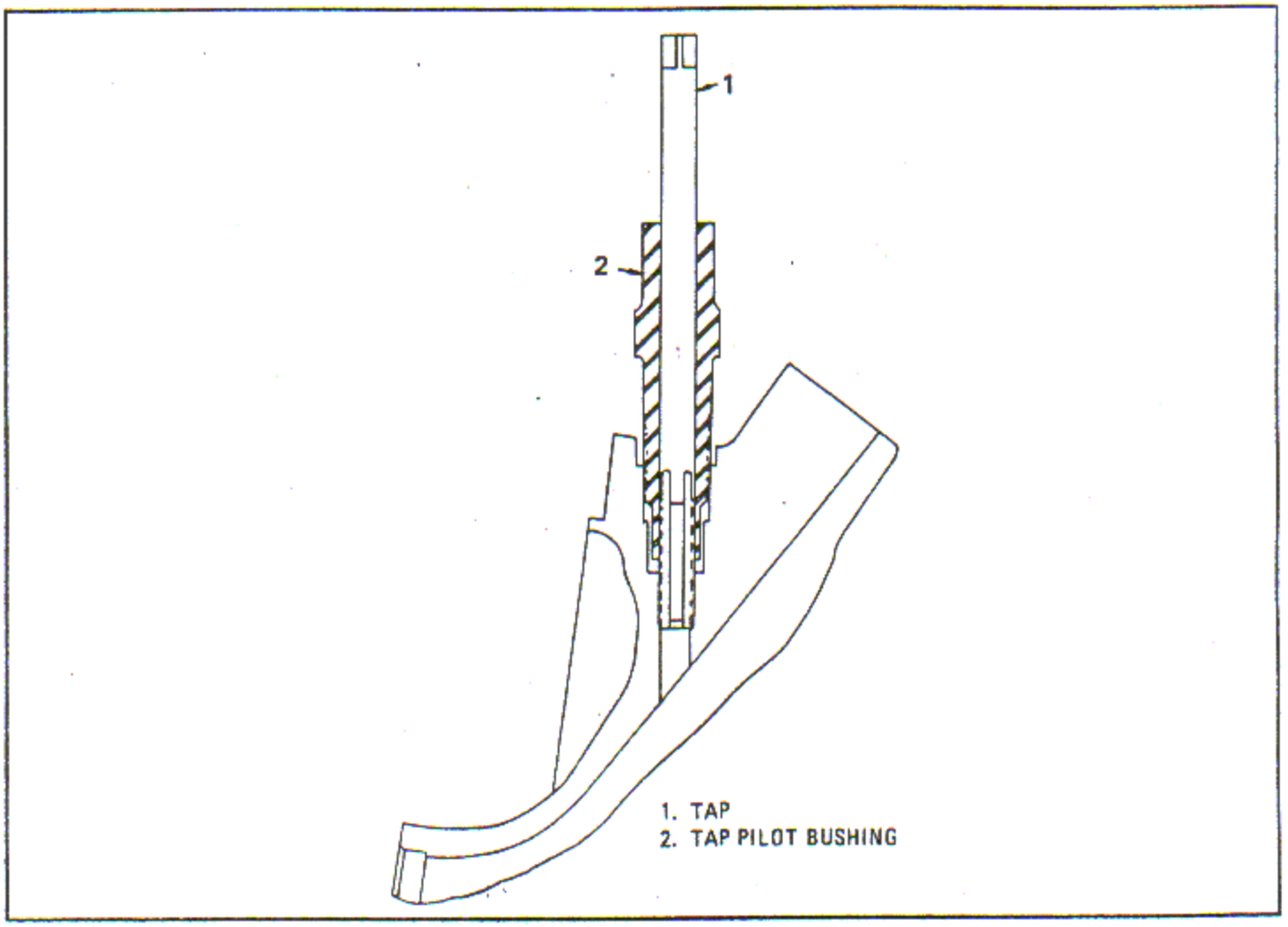

Figure 6-201. Rechasing 9M/M - 1.25M/M Thread

6-634. Inspect and Ream Diaphragm Bore. Inspect the diaphragm bore for wear and ovalization. If these conditions are evident, re-ream the bore to true up as follows.

a. Install reamer pilot bushing (4, figure 6-200 in the breather hole.

b. Select the proper oversize reamer (5) that will clean up the diaphragm bore only.

CAUTION

Do not go below the 7.410 - 7.470 inch original reamed depth dimension. Do not oversize the hole beyond the 0.3155 inch maximum hole diameter permitted.

6-635. Inspect and Rechase 9M/M - 1.25M/M Thread.

a. Inspect the 9m/m - 1.25m/m thread for nicks and burrs. If these conditions are present, install tap pilot bushing in the vent plug location.

b. Using tap rechase the threads to clean up only.

CAUTION

During the clean-up operation, ensure that the tap enters the original threads. Do not remove and thread stock.

6-636. Chrome Plate New Vent Tube or Fabricate New Vent Tube.

a. New supercharger oil seal vent tubes may be chrome plated on the 0.3025 - 0.3015 inch diameter A and reground as shown to provide a

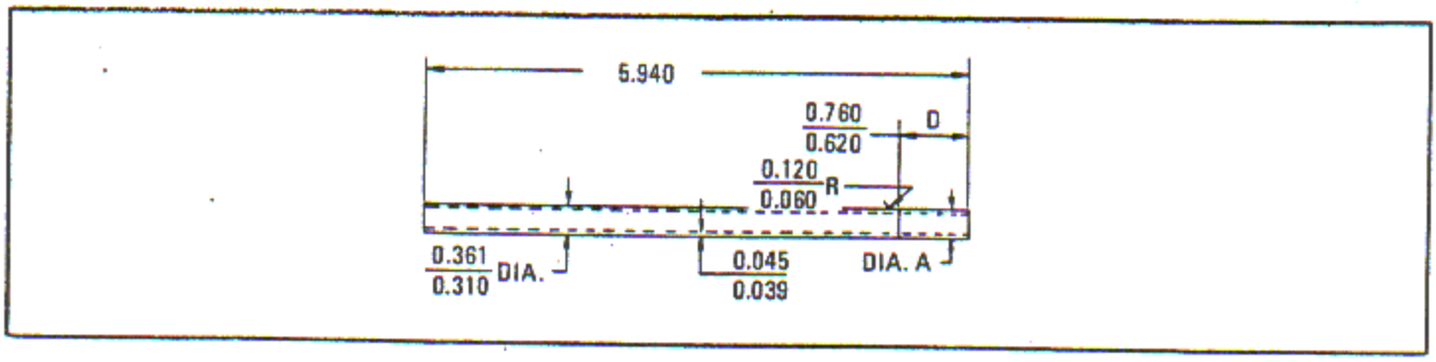

Figure 6-202. Oil Seal Vent Tube Machining Limits

0.000 - 0.002 inch tight fit when assembled. Chrome plate and grind area D to the required diameter listed following step b. For chrome plating procedure, refer to paragraph 6-871. See figure 6-202.

b. As an alternate, a new supercharger oil seal vent tube may be locally fabricated from (AMS 4070) oversize seamless aluminum tubing. Grind the tube to provide the required fit as listed, using standard shop practices. All dimensions listed are given in inches.

Diaphragm Reamed Hole Size	Plated or OS Tube End
0.3005 - 0.3015 STD	0.3015 - 0.3025 STD
0.3025 - 0.3035 OS	0.3035 - 0.3045 OS
0.3045 - 0.3055 OS	0.3055 - 0.3065 OS
0.3065 - 0.3075 OS	0.3075 - 0.3085 OS
0.3085 - 0.3095 OS	0.3095 - 0.3105 OS
0.3105 - 0.3115 OS	0.3115 - 0.3125 OS
0.3125 - 0.3135 OS	0.3135 - 0.3145 OS
0.3145 - 0.3155 OS	0.3155 - 0.3175 OS

NOTE

The 0.3175 inch maximum size for grinding the tube may be used only if this size will pass freely through the 9 m/m thread hole at assembly. The tube shall not be forced through the threaded hole.

6-637. Tube Installation.

a. Thoroughly wash or degrease and blow dry both the tube and the supercharger rear housing vent tube hole.

NOTE

Ensure that the components are clean and all metal chips and foreign particles have been removed.

b. Insert the tube through the breather hole ensuring that the resized end is downward. Permit the tube to rest on the diaphragm bore. Coat the tube OD at the diaphragm bore location with sealing compound (Loctite Grade C, American Sealants Co., Hartford, Conn., or equivalent).

c. Insert the installing punch (1, figure 6-203), down into the tube as shown. Using a hammer, tap the top end of the punch to firmly seat the tube in the reamed hole at the diaphragm. After seating, wipe off the excess sealing compound and permit the compound to dry.

d. Install pilot bushing (4) in the breather hole as shown. Using the 0.238 inch diameter expander (3), operating at 1100 rpm, spread the tube to a depth sufficient to pass through the 9m/m thread only.

NOTE

Use white lead, Federal Specification TT-W-241, as a lubricant.

e. Repeat step d. using the 0.256 inch diameter expander (3) for final expansion of the tube into the 9m/m thread.

f. Using the 0.222 inch diameter expander (3) and white lead, spin the area below the 9m/m thread to expand the excess metal left on the inside of the tube.

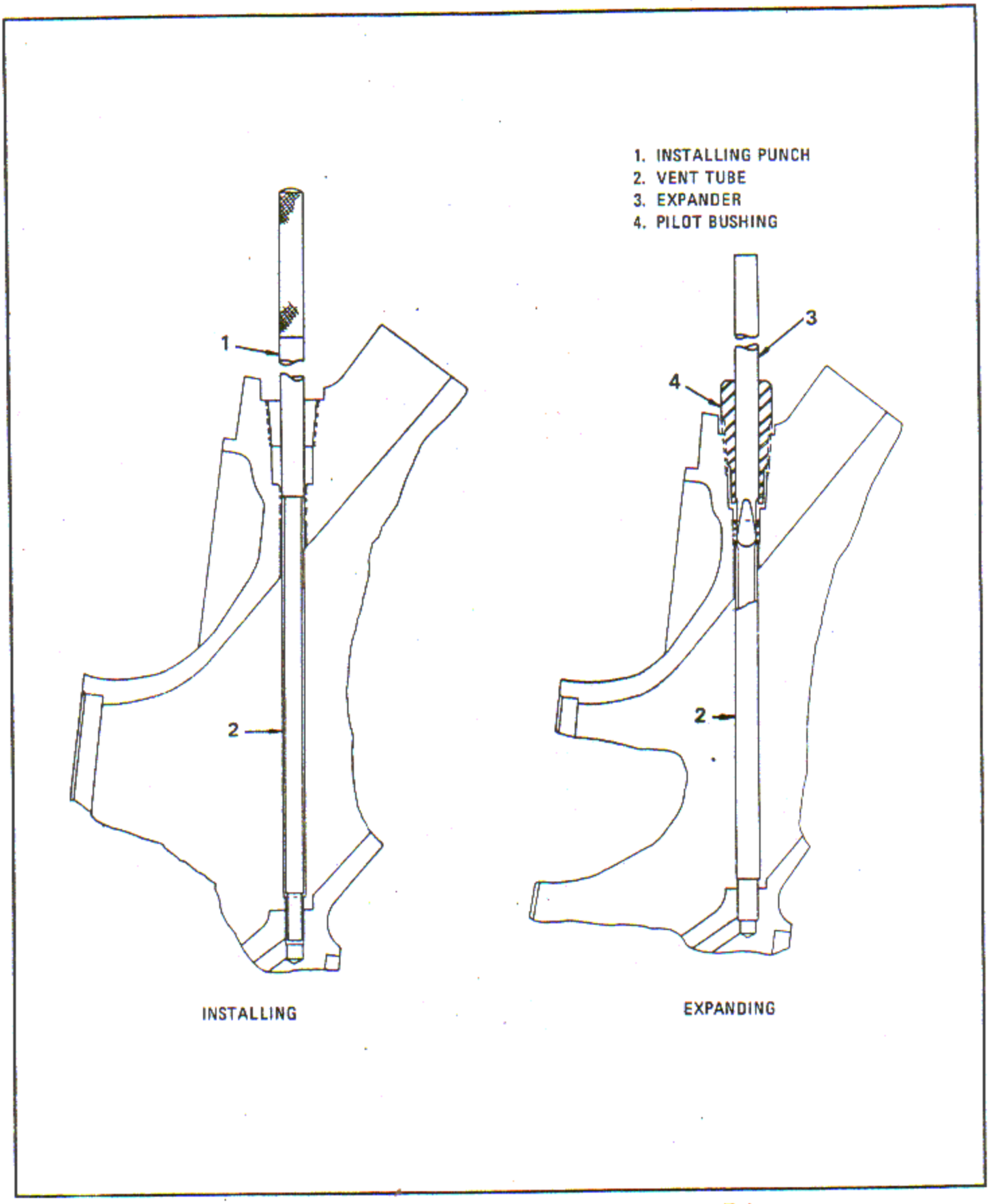

Figure 6-203. Installing and Expanding Oil Seal Vent Tube

g. Wash or degrease the assembly to remove all white lead and foreign particles. Refer to Section V.

6-638. Pressure Test Tube.

a. Coat the tube external surfaces with a suitable liquid soap. Apply 40 - 50 psi air pressure to the tube ID and observe the outside for indications of leaks. Maintain the air pressure for approximately 5 minutes. No leaks are permissible.

b. Alternate testing may also be accomplished, if desired, by use of locally fabricated, non-leak fittings for internal introduction of air pressure. Apply 40 - 50 psi air pressure and submerge the assembly in tap water or other transparent liquid. Observe for leaks. No leaks are permissible.

c. After testing, thoroughly wash or degrease the complete assembly and check all passages for cleanliness.

6-639. OIL SUMP - INCORPORATION OF ADDITIONAL CLEAN-OUT PLUGS. (See tool group 91.)

6-640. GENERAL.

NOTE

Use coolant for all machining operations in accordance with standard practices. All dimensions in these instructions are given in inches. Unless otherwise specified, tolerances are as follows:

Decimals	± 0.010
Angles	± 2 Degrees
Surface Finish	200 microinches or better.

6 641. Machine and Tap Hole Near Top of Sump at Intersection of Arms.

a. Clamp fixture (1, figure 6-204) to top surface of cube block under spindle of radial drill.

b. Load sump in fixture (1) as shown.

c. Locate, lay out, center punch and spot drill the center of existing pipe plug centrally located at intersection of arms approximately 1.190 inch lower than the arms mating surface as shown.

d. Drill through to 0.953 inch diameter, approximately 0.975 inch deep.

e. Using reamer, ream through to 0.9720 - 0.9823 inch diameter, approximately 0.875 inch deep.

f. Using spotfacer (Cat. No. 403-4387, Eclipse Counterbore Div., Illinois Tool Works, Detroit, Mich. 48220) or equivalent, spotface to 1.50 inch diameter, 0.000 - 0.020 inch deep with 0.020 - 0.030 inch radius as shown. A surface finish of 80 microinches rms or better is required on spotface surface.

g. Countersink 90 degrees to 1.070 - 1.100 inch dimension as shown using countersink (Cat. No. 404-4983, Eclipse Counterbore, Div., Illinois Tool Works, Inc., Detroit, Mich. 48220) or equivalent.

h. Using tap, tap 1.0625-12 UN special thread to 1.0084 - 1.0104 inch pitch diameter, 0.680 inch deep as shown. The pitch diameter is to be perpendicular to the spotface within 0.002 inch. Check the 1.0084 - 1.0104 thread pitch diameter using thread plug gage.

i. Remove sump from fixture. Leave fixture set up for paragraph 6-643.

j. Break sharp edges of reworked surfaces 0.003 - 0.005 inch approximate radius and blend.

6-642. Assemble Bushing.

a. Install bushing on installer.

b. Apply EC1838 B/A compound on bushing thread.

c. Chill bushing and installer -30° F (-32°C) minimum and heat sump in over to 225 - 250° F 108 - 120°C).

d. Assemble bushing in sump and seat with 1000 inch-pounds torque.

6-643. Drill Stake Pin Hole and Install Pin.

a. Load sump in fixture (1, figure 6-204) on cube block under spindle of radial drill as outlined in paragraph 6-641.

b. Install drill fixture in position locating in bushing ID. Rotate body of fixture (1) to position drill guide hole (0.081) as shown. Tighten nut.

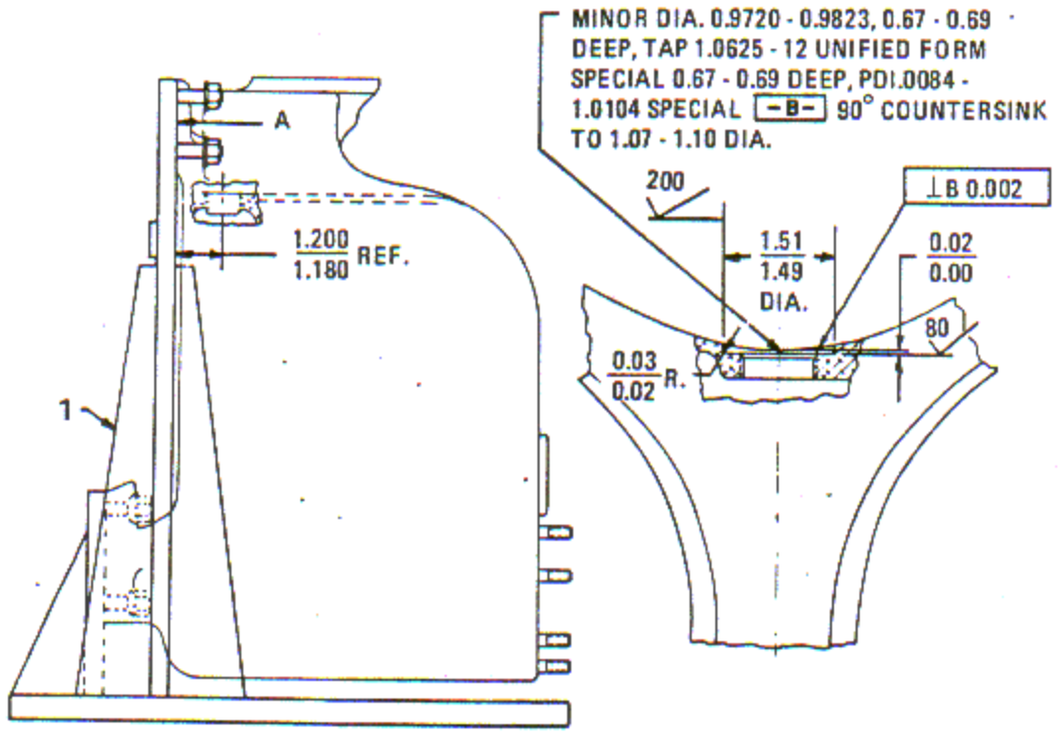

MACHINING AND TAPPING HOLE AT INTERSECTION OF ARMS

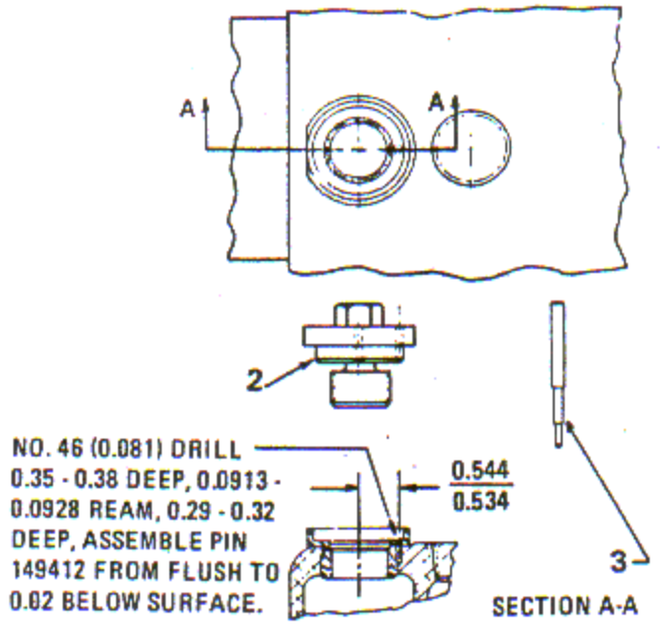

DRILLING STATE PIN HOLE AND INSTALLING TOOL

Figure 6-204. Oil Sump - Incorporation of Additional Clean-Out Plugs (Sheet 1 of 2)

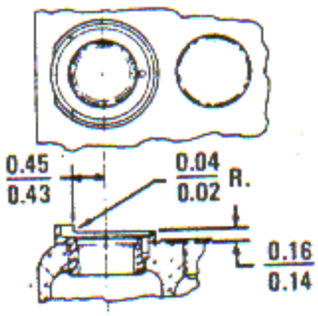

MILLING RIM OF BUSHING

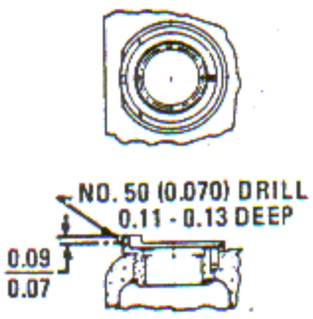

DRILLING LOCK WIRE HOLE

1. FIXTURE
2. JIG
3. JIG ALIGNMENT PIN
4. SEAL
5. LOCKWIRE
6. PLUG

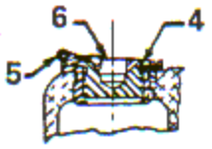

ASSEMBLING PLUG

Figure 6-204. Oil Sump - Incorporation of Additional Clean-Out Plugs (Sheet 2 of 2)

c. Using drill (List No. 918, The Cleveland Twist Drill Co., Cleveland, Ohio 44101) or equivalent, drill No. 46 (0.081 inch) hole through bushing, 0.350 - 0.380 inch deep as shown. Clear holes of chips.

d. Loosen nut, rotate body and align reamer guide hole (0.092) with drilled hole using alignment pin. Tighten nut.

e. Ream to 0.0913 - 0.0928 inch diameter x 0.290 - 0.320 inch deep using reamer (List No. 630, The Cleveland Twist Drill Co., Cleveland, Ohio 44101) or equivalent.

f. Assemble pin, from flush to 0.020 inch below surface as shown.

6-644. Mill Rim of Bushing.

a. Set up and clamp fixture to table of vertical milling machine. Refer to figure 6-296.

b. Load sump in fixture (1, figure 6-204), as shown.

c. Using a suitable end mill incorporating a 0.030 inch corner radius, mill excess of rim to 0.150 inch dimension, holding 0.440 inch dimension from centerline.

6-645. Drill Lock Wire Hole.

a. Lay out and center punch outside surface of lip on centerline of sump 0.080 inch from end face as shown. Refer to figure 6-204.

b. Using a portable air or electric hand drill, drill No. 50 (0.070 inch) lock wire hole through rim segment of bushing as shown using drill (List No. 918, The Cleveland Twist Drill Company, Cleveland, Ohio 44101) or equivalent.

6-646. Deburr and Wash.

a. Break sharp edges of newly machined surfaces 0.003 - 0.015 inch approximate radius and blend.

b. Thoroughly wash out internal chambers of sump to ensure removal of all chips and blow dry with compressed air.

6-647. Assemble Plug.

a. Coat seal and thread of plug with Lubriplate.

b. Assemble plug and seal in port of sump as shown, figure 6-104.

c. Using lock wire (AMS 5685 steel wire 0.030 - 0.033 inch diameter), lockwire plug to rim of bushing as shown.

d. Touch up paint as required using standard practices.

6-648. OIL SUMP MACHINING ASSEMBLY STRAINER SLEEVE BOSS, REPAIR OF.

6-649. REPAIR PROCEDURE. Engine oil sump machining assemblies found damaged or excessively worn in the strainer sleeve boss area may be reworked in accordance with figure 6-205.

6-650. DIFFUSER PLATE VANE SALVAGE AND RECONDITIONING.

6-651. VANE REMOVAL LIMITS.

CAUTION

Ensure that material removal is kept at a minimum. Excessive removal of material from the vane leading edge tips will increase the area of the diffuser throat and reduce engine efficiency during high blower operation. Excessive material removal at the trailing edge tips will affect distribution characteristics to the cylinders.

a. If erosion has undercut a vane to where there is danger of metal breaking off, remove material from the vane leading edge tips up to a maximum of 0.125 inch. See figure 6-206. Measure the removed material midway between the fin root and the propeller end face of the vane. Starting at the OD of the plate (17.70 inch dia) at a point in line with the vane contour, continue on the outer surface of the vane to the inner tip. Maintain a minimum distance of 6.625 inches as shown.

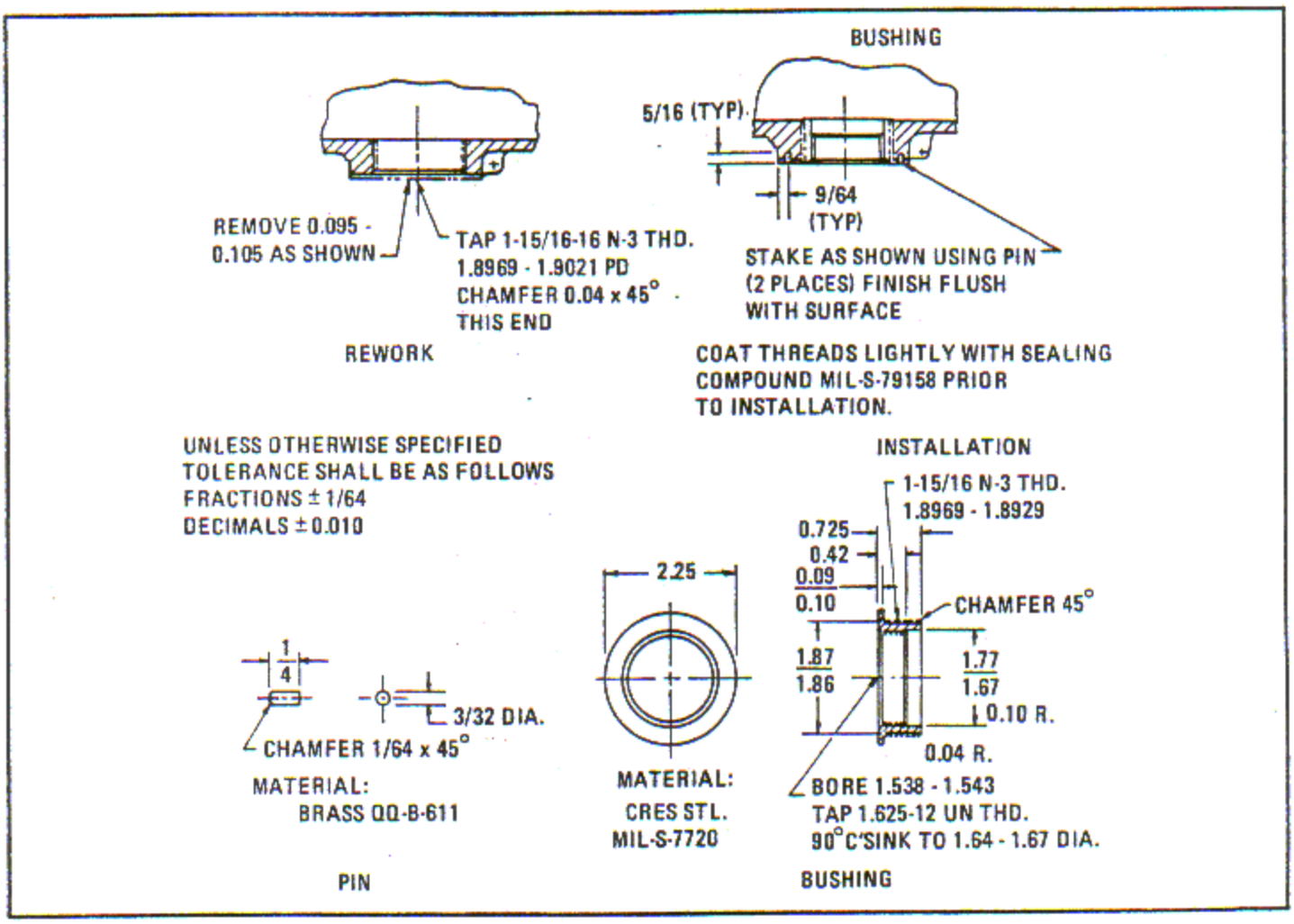

Figure 6-205. Installing Oil Sump Strainer Hole Bushing

b. Material may be removed from the vane trailing edge tips up to a maximum of 0.250 inch measured along the axis of the vane as shown in figure 6-206, or by removing material to a 45 degree maximum angle, measured from the root of the trailing edge up to the top of the vane. Blend sharp edges to a 0.003 - 0.015 inch radius.

NOTE

Do not cut back to the 45 degree angle unless absolutely necessary.

6-652. RECONDITION VANES BY WELDING. Diffuser plate vanes which cannot be salvaged as specified in the preceding paragraph, may be repaired as follows.

CAUTION

Perform all welding using the inert gas shielded arc process, AC high frequency with Weco torches, Model No. 10 or No. 12 (Wilson Equipment Corporation, 1086 Madison Avenue, Paterson 3, New Jersey) or equivalent. Employ a foot-control voltage regulator, a 1/16 inch tungsten electrode, 30 - 40 amperes and an Argon gas flow of 10 - 11 liters per minute. Minimum amperage must be maintained to prevent burn-through, actual amperage will be determined by the equipment and the skill of the operator.

a. Rout out all cracks or damaged areas using a 1/8 inch carbide burr mounted in a suitable high speed hand grinder.

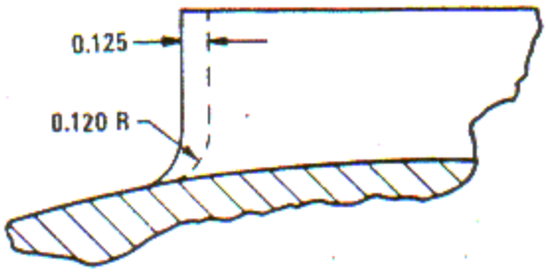

RECONDITIONING DIFFUSER PLATE LEADING EDGE TIPS

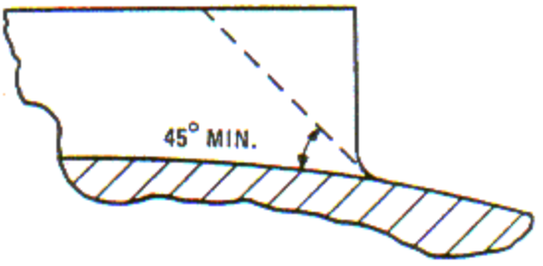

RECONDITIONING TRAILING EDGE TIPS AT 45 DEGREE ANGLE

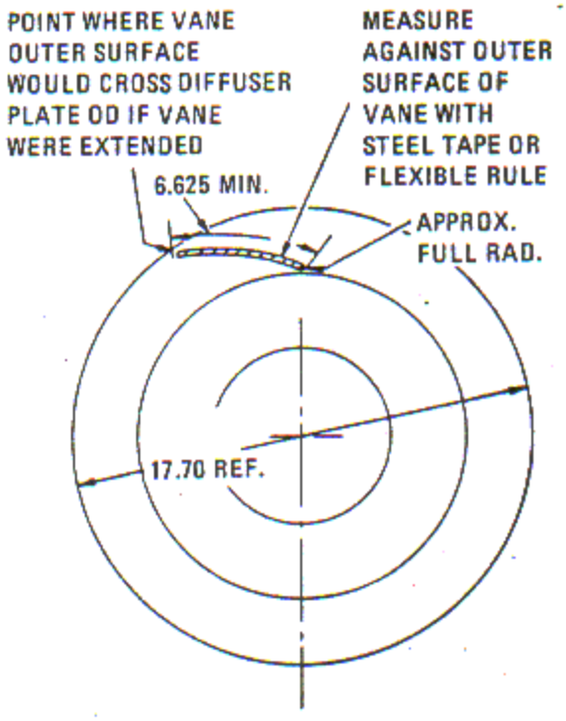

MEASURING VANE MATERIAL

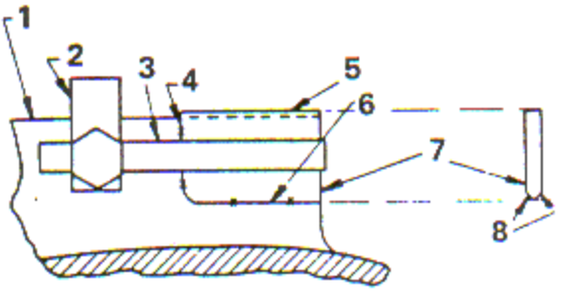

WELDING PLATE VANE

1. DIFFUSER PLATE VANE
2. CLAMP
3. COPPER STRIP
4. TACK WELD
5. BURR AND POLISH
6. BUTT WELD
7. PATCH
8. BEVEL EDGES

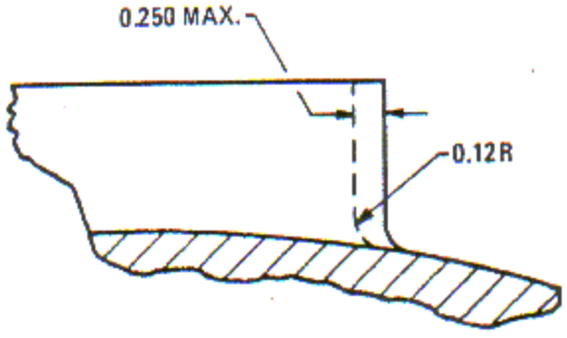

RECONDITIONING TRAILING EDGE TIPS

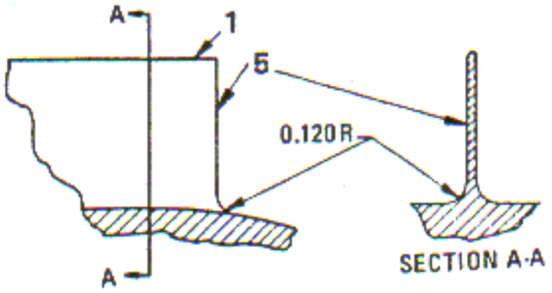

BLENDING WELDED DIFFUSER PLATE VANE

Figure 6-206. Diffuser Plate Vane Salvage and Reconditioning

b. Thoroughly clean the area to be welded using a wire brush or abrasive cloth, Federal Specification P-C-451, Grade 320. Wash off the polished area with trichlorethylene, Military Specification MIL-T-7003.

c. Use 1/16 inch diameter filler wire AMS4190 (43-S, Haynes Stellite Company, Kokomo, Indiana, or equivalent) to build up the weld to the required finished dimension.

d. If the damaged section exceeds 0.50 inch length, remove the section and form a generous radius in the cut-out corner. Polish and clean the area to be welded as described in step b.

e. Fabricate a patch from a section of rejected diffuser plate, cut from the same location as the damaged area being replaced. Bevel the edges of the patch as shown (8, figure 6-206) to ensure proper weld penetration.

f. Clamp the patch to the vane with a locally fabricated strip of copper on each side of the vane. Tack weld (4) the patch in three or four locations and remove the copper strips (3).

g. Butt weld (6) the patch (7), allowing it to extend a minimum of 1/16 inch above the vane to provide sufficient material for subsequent polishing and blending. Employ the procedures and equipment specified in step c.

h. Visually inspect the repaired vanes for cracks and perform a dye or fluorescent penetrant inspection. If cracks are revealed, remove the cracks and repeat the sequence of operations in steps a through g, until all crack indications are removed.

6-653. Blend and Polish Welded Vanes.

a. Dress a 1/4 inch wheel (Red Back Wheel, Manhattan Raybestos Inc., Passaic, N.J., or equivalent) to form a radius equivalent to the adjacent unwelded section of vane. Remove the excess weld maintaining the required radius between the vane (1, figure 6-206) and the diffuser plate.

b. Polish and blend the repaired section to the original contour and height using a cartridge roll, made of abrasive cloth, Federal Specification P-C-451, Grade 320. Break all sharp edges.

NOTE

Employ a locally fabricated template (conforming to the contour of the vane) to facilitate polishing to the adjacent vane height.

c. Check the mating surfaces of the shroud plate and diffuser vanes by placing the diffuser plate in position on a surface plate and checking for high spots. Blend all high spots on the vanes.

d. Check the vane thickness using a micrometer.

e. Perform a final dye penetrant check of the welded area. No cracks are permitted.

f. Touch up the reworked areas with Alodine.

6-654. DIFFUSER PLATE VANE GROOVES REPAIR.

6-655. GENERAL. Diffuser plate fin grooves worn beyond limits may be repaired using Epoxy fill in accordance with the following:

a. Strip resin coat from surface of metal and clean as necessary.

b. Apply dichromate surface treatment as required.

c. Apply Bondmaster M620, using an extrusion gun, to the worn groove areas. Smooth flush with a putty knife.

d. Cure for four hours at 149°C (300°F).

e. Apply resin coat and cure in accordance with standard practice.

6-656. DIFFUSER PLATE TO SUPERCHARGER REAR SECTION RECONDITIONING TO OBTAIN TIGHT FIT.

6-657. GENERAL. When the Table of Limit fit, reference 465, Section IX, between the supercharger rear section and the diffuser plate cannot be obtained, either or both parts may be reworked according to which part is excessively worn, and a steel ring may be shrunk onto the diffuser plate pilot boss to secure the fit. The thickness of the ring is determined after machining either or both of the parts.

NOTE

It is recommended that the pilot diameter fit of the parts be determined by measurement and the steel ring be shrunk on the diffuser plate to obtain the specified tight fit when required. When parts are reworked, it is recommended that an attempt be made to provide a 0.004 - 0.006 inch tight fit and on the higher side of the limit. The fit of the diffuser plate, supercharger front housing and supercharger rear housing should be performed in one area.

6-658. Machine Supercharger Rear Housing.

a. Using standard shop practices, machine the housing ID to a maximum diameter of 10.665 inches ± 0.001 inch as necessary to true up the pilot diameter.

b. The pilot diameters must be held concentric, parallel, square and true to the attaching flange within 0.003 inch full indicator reading.

6-659. Machine Diffuser Plate Pilot OD.

a. Using standard shop practices, machine the pilot OD to a minimum diameter of 10.589 inches ± 0.001 inch as necessary to true up the pilot diameter.

b. The pilot diameter must be held concentric, parallel, true and square to the attaching flange surface within 0.003 inch full indicator reading.

c. Machine a flat 1.250 inches long on pilot OD of diffuser plate as shown in figure 6-207.

6-660. Fabricate Steel Ring and Machine Diffuser Plate.

a. Fabricate a steel ring from shim stock conforming to AMS 5516, having a thickness of 0.010 - 0.040 inch as required to obtain the proper fit between the diffuser plate and the supercharger rear housing. The ring should be 0.250 inch wide. Weld as shown in figure 6-207 and break all sharp edges.

b. Chill the diffuser plate to -57°C (-70°F) using standard procedures. Install the ring on the diffuser plate pilot OD. Locate welded area of ring in the flat previously provided.

6-661. Install Diffuser Plate to Supercharger Rear Housing.

a. Heat the supercharger rear housing to 100°C (212°F).

b. Install the diffuser plate to the supercharger rear housing. Refer to paragraph 7-35.

6-662. SUPERCHARGER REAR HOUSING PILOT DIAMETER, REWORK BY PLASMA SPRAY.

6-662A. REPAIR PROCEDURE. Supercharger rear housings that are worn on the pilot diameter can be reworked as follows:

NOTE

Supercharger rear housings that are worn on the pilot diameter in excess of 10.666 inches but do not exceed 10.681 inches as shown in figure 6-208, can be reworked by plasma spray.

a. Apply plasma spray coating as specified in paragraph 6-914. Apply Metco 450 nickel aluminum powder to a minimum thickness of 0.005 inch and overspray as required to facilitate machining to finish diameter.

b. Finish machine pilot diameter to dimensions given in figure 6-208.

NOTE

Spray runover on B surface must be removed. Spray runover on C surface may be hand dressed approximately flush with original surfaces.

6-663. ACCESSORY DRIVE AND STARTER SHAFT RECONDITIONING.

6-663A. ACCESSORY DRIVE AND STARTER SHAFT THRUST FACE GRINDING.

6-664. Grind to Remove Pitting.

a. Grind the front and rear thrust faces a maximum of 0.010 inch (0.347 inch minimum

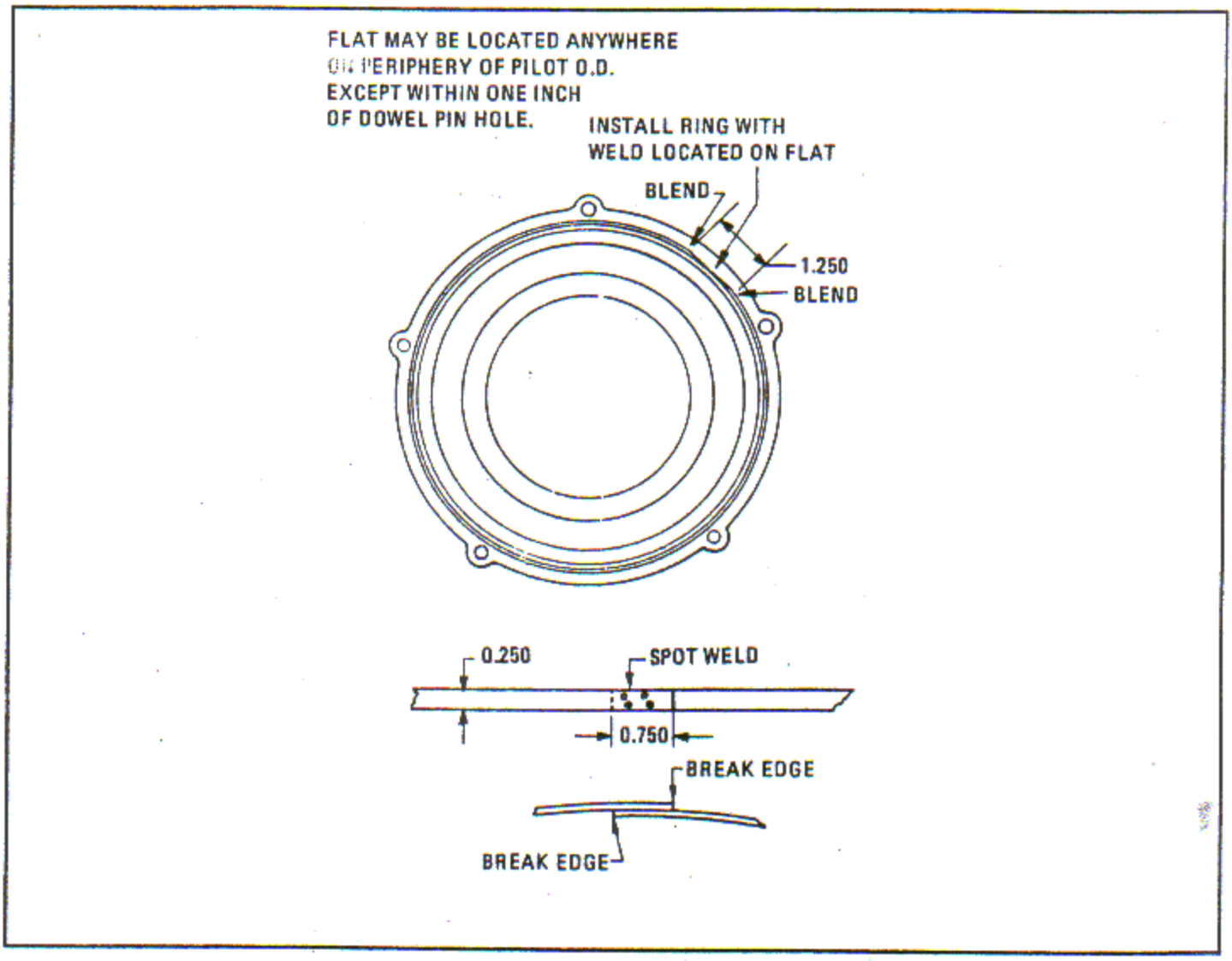

Figure 6-207. Diffuser Plate Reconditioning

web thickness for P/N 120360 only) as necessary to remove pitting or scoring.

b. Maintain squareness within 0.002 inch and a surface finish of 15 microinches rms.

c. Magnetic particle inspect the shaft after grinding.

6-665. ACCESSORY DRIVE AND STARTER SHAFT COUPLING GRINDING. Nicks and chips on the rear face and splines may be removed as follows:

a. Grind the rear face of the coupling to remove a maximum of 0.015 inch (minimum overall length 1.245 inches).

b. Restore the 30 degree ID chamfer.

c. Break sharp edges to radius of 0.010 - 0.030 inch.

d. Maintain a surface finish of 50 microinches rms on the reworked surfaces.

e. Magnetic particle inspect the coupling.

6-666. ACCESSORY DRIVE AND STARTER SHAFT COUPLING, INCREASED SPLINE CHAMFER AND BREAKEDGE RADIUS.

a. Using standard machine shop practice, increase the 30 degree chamfer diameter on the

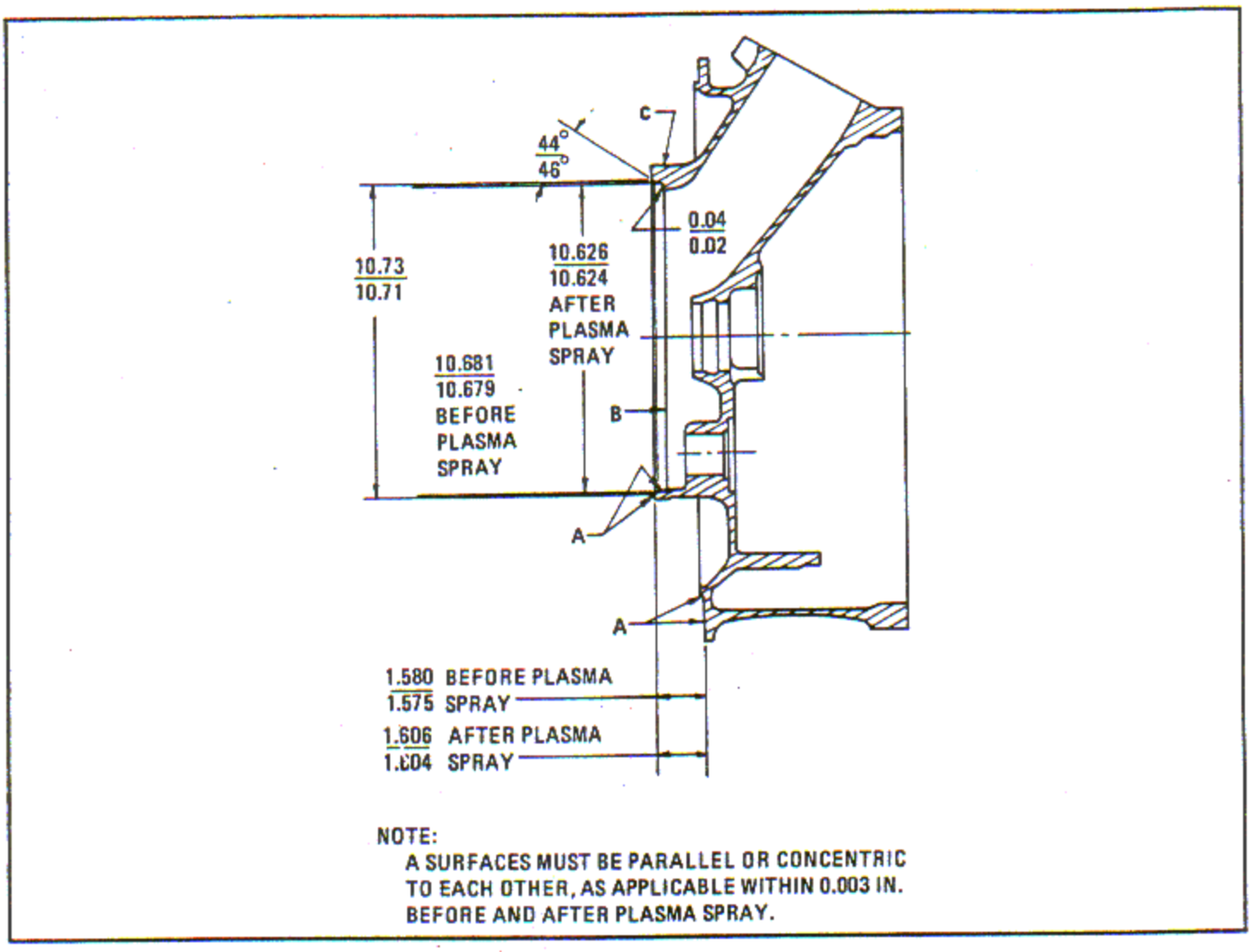

Figure 6-208. Reworking Supercharger Rear Housing to Diffuser Plate Pilot Diameter

anti-propeller end of the coupling internal splines to the dimension shown in figure 6-209.

NOTE

This rework may be accomplished with the coupling installed in the crankshaft.

b. Break sharp edges 0.010 - 0.030 inch radius and blend.

c. Blend out any chipping that may exist on the spline within 0.125 inch from the anti-propeller end.

d. Magnetic particle inspect the part after rework.

6-667. ACCESSORY DRIVE AND STARTER SHAFT SPHERICAL OIL SEAL AND RETAINER LAPPING. (See tool group 4.)

6-668. Lap Flat Side of Seal Ring.

CAUTION

Overtightening will distort the ring.

a. Clamp fixture (2, figure 6-210) on a lathe chuck (3). Assemble the oil seal ring on the fixture as shown. Tighten the socket head screw with a suitable wrench (1) only enough to prevent the ring from slipping.

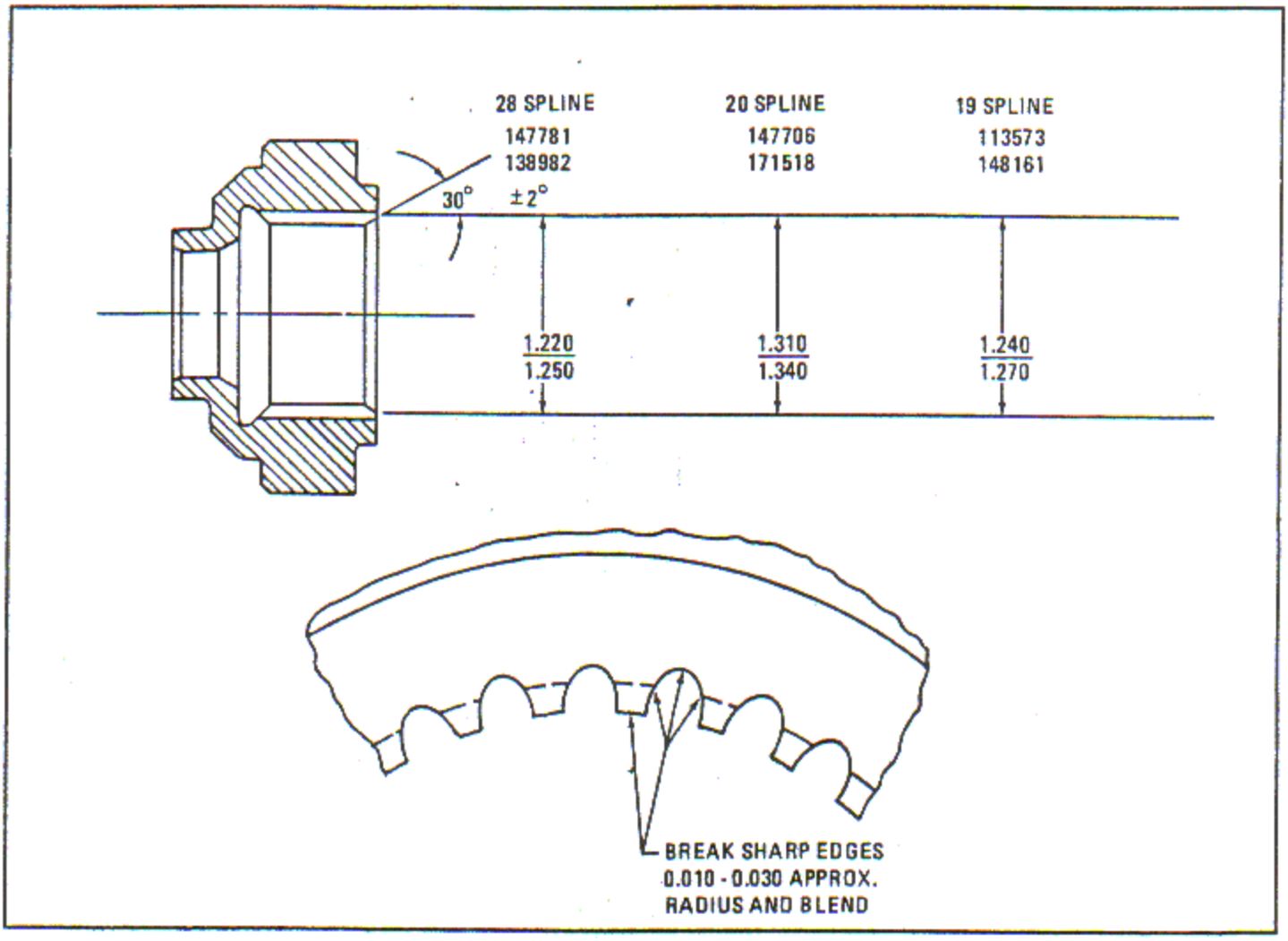

Figure 6-209. Accessory Drive and Starter Shaft Coupling Spline Rework

b. Apply a small amount of fine grade lapping compound (Carborundum Company, Niagara Falls, New York, or equivalent) to the flat surface. As the ring turns, hold flat surface of the second oil seal against the first ring by hand. The second ring is used merely as a means of lapping the ring which will be installed in the engine. Lap by applying light pressure and at the same time move the second ring radially in all directions to obtain an accurate seat between the flat surfaces of both rings.

c. Remove the ring from the fixture. Wash off the lapping compound with a suitable solvent. Check the flat surface on a surface plate using prussian blue (Arthur Brown and Brothers, Inc., New York 10036, New York, or equivalent). Leave the fixture in the lathe for the next operation.

NOTE

The use of alternate lapping equipment is permissible providing surface finish requirements are met.

6-669. Lap Spherical Surface of Oil Seal Ring and Retainer.

CAUTION

Overtightening will distort the ring.

a. Assemble the oil seal ring on fixture (2, figure 6-210) as shown. Tighten the socket head screw with a suitable wrench (1) using only enough torque to prevent the ring from slipping.

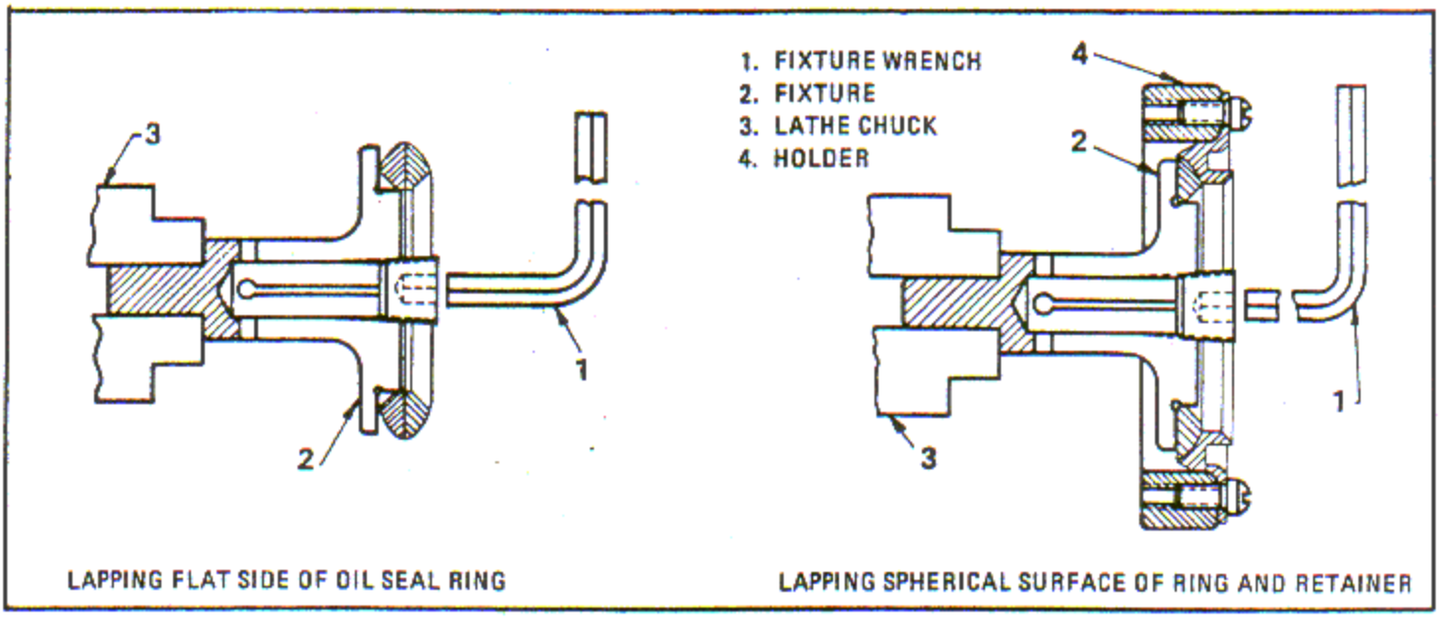

Figure 6-210. Accessory Drive and Starter Shaft Spherical Oil Seal and Retainer Lapping

b. Assemble the oil seal retainer on the ground side of the holder (4, figure 6-210) using a screw in each hole. Torque screws evenly.

c. Apply a small amount of lapping compound to the spherical surface of the oil seal ring. As the ring turns, hold the retainer against it. Lap by applying pressure lightly by hand and at the same time move the part in a circular motion in all directions to obtain an accurate seat between spherical surfaces of both parts.

d. Remove the lapping compound by washing with a suitable solvent and check the seat with prussian blue.

NOTE

The use of alternate lapping equipment is permissible providing surface finish requirements are met.

6-670. STARTER COUPLING THRUST FACE RECONDITIONING. Recondition the scored seal thrust faces of starter couplings by lapping or by grinding. See figure 6-211. The surface must be flat within 0.0005 inch and the surface finish must be 16 microinches rms or better. The flange thickness can be reduced to the minimum dimensions listed. After grinding, magnetic particle inspect the coupling for grinding cracks.

Engine Model	Minimum Flange Thickness
R1820-76A/B/C/D	0.113 inch
R1820-80, -80A, -80B	0.100 inch
R1820-86A	0.113 inch

6-671. STARTER COUPLING DRIVE FACE (3 JAW), FATIGUE CRACK, REWORK.

a. Fatigue cracks located in corner of ramp at base of starter coupling may be ground out to a maximum depth of 0.040 inch.

b. Maintain 0.035 - 0.040 inch radius and blend with present contour.

c. Surface must be smooth and corners carefully rounded, particularly at outside diameter bearing surface.

d. After grinding, magnetic particle inspect the coupling for grinding cracks.

6-672. IMPELLER LOW SPEED DRIVE CLUTCH CAM ASSEMBLY TO ROLLER CLUTCH CAGE CLEARANCE.

6-672A. At assembly of the roller clutch, the required diametrical clearance between the cam assembly OD and the roller clutch cage is 0.004 - 0.006 inch. On new parts this will require rework of the cage ID to provide sufficient clearance between the parts. This may be accomplished by

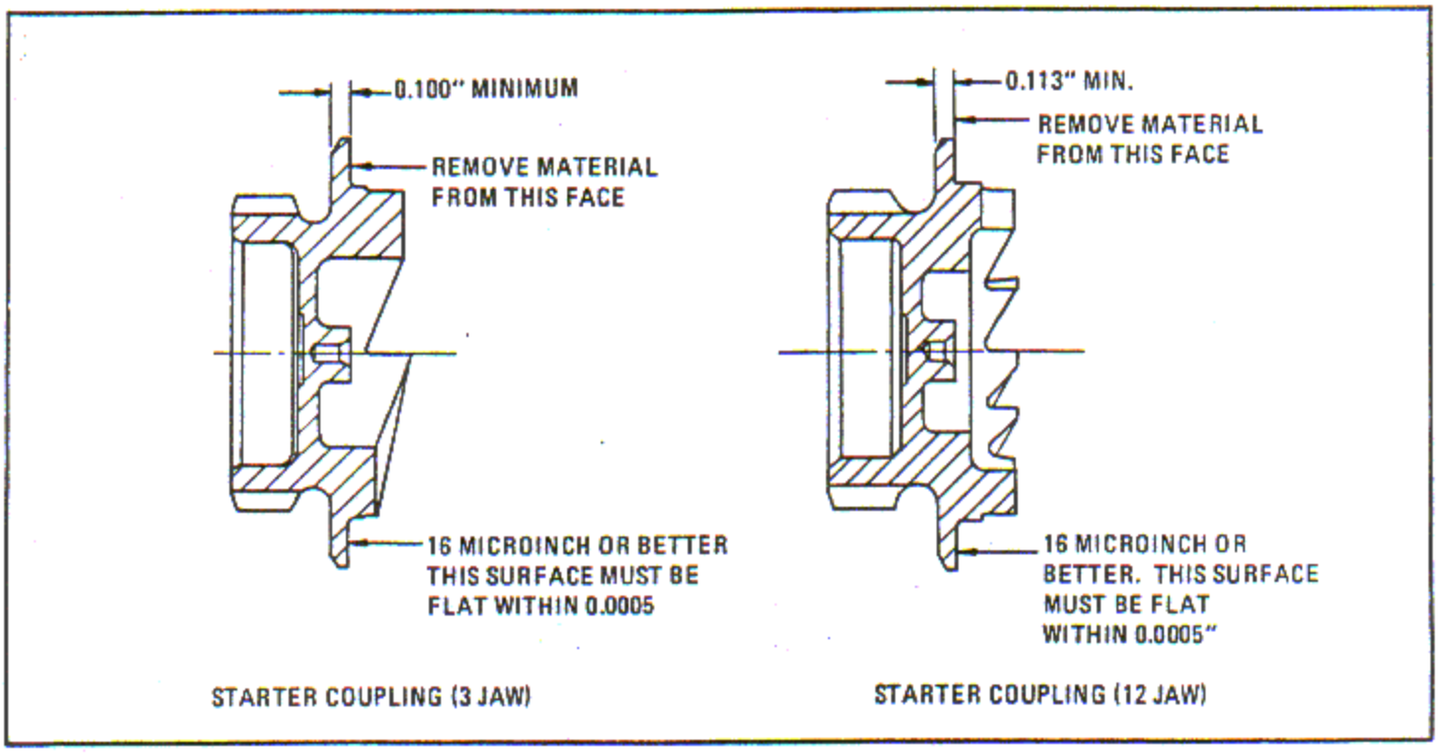

Figure 6-211. Grinding Accessory Drive and Starter Shaft Coupling

machining the 2.263 - 2.262 inches diameter to a maximum diameter of 2.265 inches.

6-673. IMPELLER DRIVE CLUTCH HOUSING MACHINING (R1820-86A AND -86B).

6-673A. In order to accommodate the new improved sprag type clutch, the roller clutch housing must be reworked as follows.

a. Following standard machine shop practices, machine the impeller drive clutch housing to 2.285 - 2.295 inches ID as shown in figure 6-212.

6-674. IMPELLER INTERMEDIATE DRIVE SHAFT FRONT AND REAR BUSHINGS REPLACEMENT (R1820-80 SERIES). (See tool group 64.)

6-675. Remove Rear Bushing from Support.

a. Remove the impeller drive gear and pinion support from the rear cover with puller (1, figure 6-213, view A) as shown. See views A and B.

b. Clamp fixture A (2) to a lathe faceplate (3) and indicate surfaces A and B to run true within 0.0005 inch full indicator reading. Clamp the support to the fixture as shown in view B.

c. Bore out the bushing to a diameter of 1.480 inches maximum as indicated at dimension C.

d. Use a suitable drift and drive out the remaining part of the lock pin. Pick out the bushing shell and flange. Remove all burrs and peening from the outer end of the pin hole.

e. Remove the support from the fixture but do not remove the fixture from the face plate.

6-676. Install New Bushing and Oversize Lock Pin in Support.

a. Heat the support in an oven or hot oil bath to a temperature of 121°C (250°F).

b. Place plug (4, figure 6-213) in the bushing and chill in dry ice and alcohol or dry ice and gasoline for 15 minutes. See view C.

c. Place the support on two wood parallels (5) and insert the bushing with the plug as far as possible by hand.

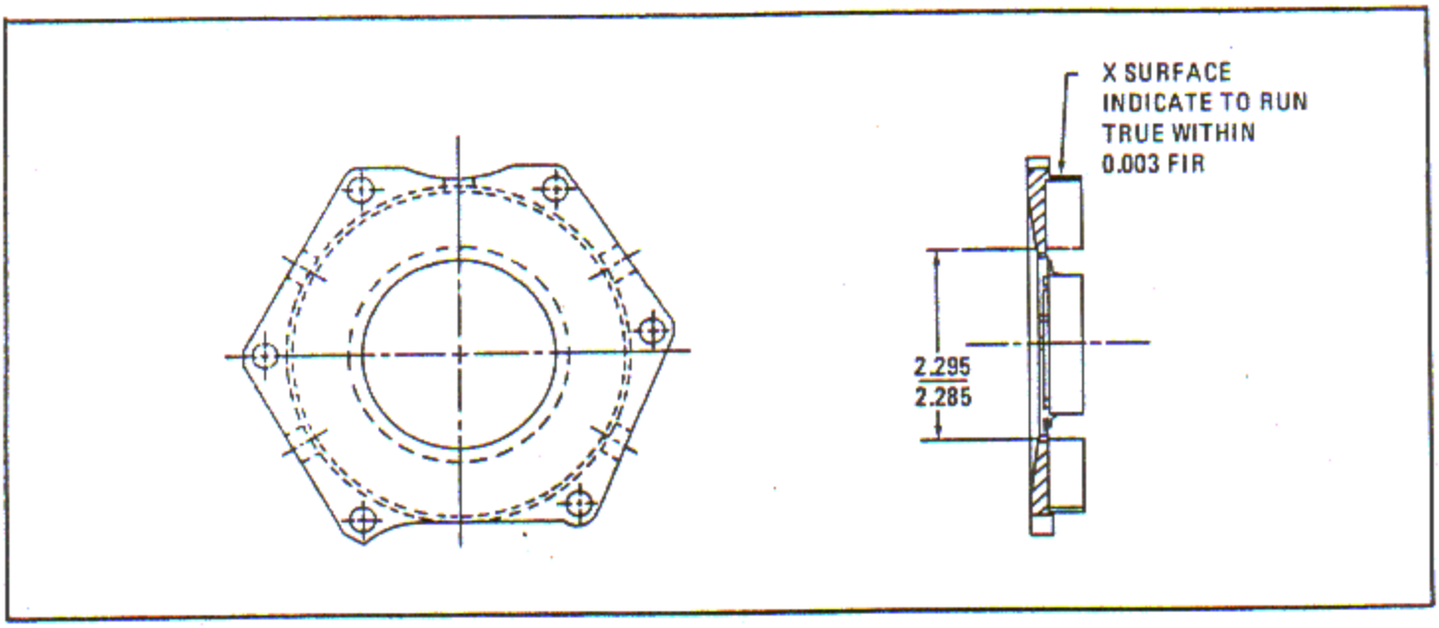

Figure 6-212. Impeller Drive Clutch Housing, Machining

d. Strike the top of the plug lightly with a hammer until the flange is properly seated in the support. Allow the support to cool for approximately 30 seconds and check with a feeler gage to determine if the flange is properly seated.

e. If necessary, strike the plug again to obtain proper contact.

f. Insert the proper size bushing (7, figure 6-213), in the lock pin hole as shown. Place a machinist level on the platform of the bushing and shim up the support until the bushing platform is level. See view D.

g. Drill through with starting drill A (8). Remove the bushing (7) and drill through with reamer drill B (9). Insert proper size reamer (10) and ream through. Check the hole with the proper size plug gage (11).

h. Drive in a new pin so the end is 0.015 - 0.030 inch from the bushing bore. Peen over the support metal around the outer end of the pin.

6-677. Finish Bore Rear Bushing in Support.

a. Clamp the support to the lathe faceplate fixture (2, figure 6-213, view E) as shown.

b. Bore the bushing through to a diameter of 1.3155 - 1.3165 inches as shown at dimension D and check with plug gage (12).

6-678. Remove Front Bushing from Supercharger Rear Housing.

a. Plug all holes and passages in the rear housing with beeswax or paraffin and place the housing, propeller end down, on a drill press table.

b. Assemble counterbore cutter (14, figure 6-213, view F), pilot and nut (15) and holder (13) to the drill press spindle. Counterbore the bushing until the pilot contacts the bottom of the bushing (18). Remove the counterbore and drive out the bottom of the bushing using a suitable plug.

c. If the bushing is pinned, drive out the remaining part of the lock pin. Pick out the bushing shell and flange. Remove all burrs and peening at the outer end of the pin hole.

6-679. Finish Bore Hole in Supercharger Rear Housing for 0.010 Inch Oversize Bushing.

a. Clamp reaming fixture B (2, figure 6-213, view G) lightly in the rear housing and place the fixture bushing (18) in the fixture.

b. Assemble the supercharger rear cover to the housing with the bushing located in the shaft support. Clamp the fixture securely.

c. Place boring tool bit (17, figure 6-213, view G) in boring bar (16). Set with a micrometer to dimension F which is 1.509 - 1.510 inches and bore through. Check the hole with plug gage (12).

6-680. Install New Front Bushing in Housing.

a. Heat the housing in an oven or hot oil bath to a temperature of 121°C (250°F) for 20 minutes.

NOTE

Ensure that the longitudinal oil groove on the bushing is located 18 degrees above the horizontal centerline on the unloaded side of the bushing as shown. See view H.

b. Place the plain end of plug (19, figure 6-213, view H) in the bushing (20), aligning the scribe mark on the plug flange with the centerline of one michelle in the housing flange.

c. Chill the bushing with the plug (19) installed in dry ice and alcohol or dry ice and gasoline for 15 minutes.

d. Place the housing on a bench, propeller end down, and install the bushing (20) with the plug (19) as far as possible. See view J.

e. Strike the top of the plug lightly with a hammer until the bushing flange contacts the housing, and is firmly seated. See view J.

f. Allow the housing to cool for 30 seconds, then strike the plug again to ensure that the bushing flange has not moved away from its seat during the cooling process.

6-681. Finish Ream Bushing in Housing.

a. Clamp reaming fixture B (2, figure 6-213) very lightly in the housing and place the fixture bushing in the fixture. See view K.

b. Assemble the supercharger rear cover to align the fixture bushing with the shaft support and clamp the fixture securely.

c. Remove the rear cover and the bushing fixture from the housing.

NOTE

Use extreme care to avoid disturbing the clamped position of the fixture.

d. Use reamer (21) and ream the bushing in the housing to the bottom. Check the reamed hole with plug gage (22). Remove all sharp edges around the end of the reamed hole.

e. Dewax the housing by heating it to a temperature of 135°C (275°F). Blow out with kerosene heated to 49°C (120°F) and approximately 20 pounds pressure.

6-682. IMPELLER INTERMEDIATE DRIVE SHAFT FRONT BUSHING REPLACEMENT (R1820-76 SERIES, -86A AND -86B). (See tool group 64.)

6-683. Removing Bottom of Impeller Drive Gear Shaft Front Bushing.

a. Plug all oil passages and channels with beeswax, or paraffin, Federal Specification C-B-191, and Federal Specification VV-W-95, or equivalent.

b. Insert drill bushing (3, figure 6-214). Drill through the gear bushing using a starting drill (2).

c. Remove drill (2) and bushing (3) and drill through bottom of the gear bushing using finishing drill (1).

6-684. Boring Out the Bushing.

a. Clamp fixture C (8, figure 6-214) very lightly in housing with the slip bushing (7) in position.

b. Place supercharger rear cover (6) on the housing with slip bushing (7) aligned in the intermediate impeller drive shaft rear bushing.

c. Clamp the fixture securely. Set tool bit in boring bar (4) with a micrometer to obtain dimension A, which is 1.124 inches. Bore to a depth of 1.5 inches for the first cut. Reset tool bit (5) with a micrometer to obtain dimension B, which is 1.142 inches maximum. Bore to a depth of 1.5 inches.

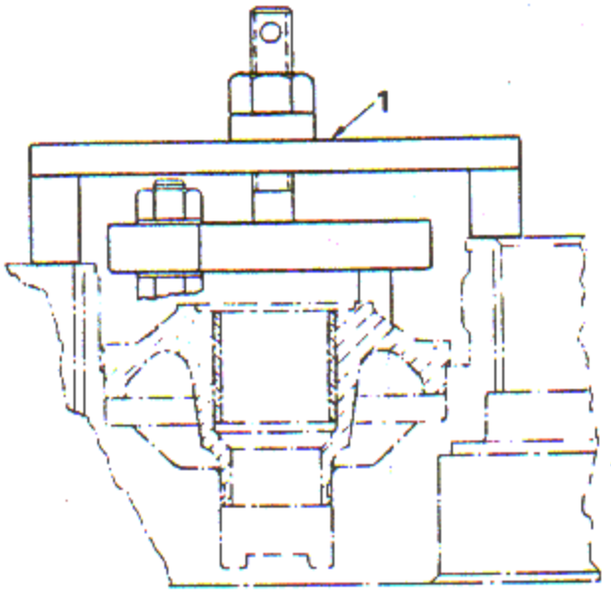

VIEW A

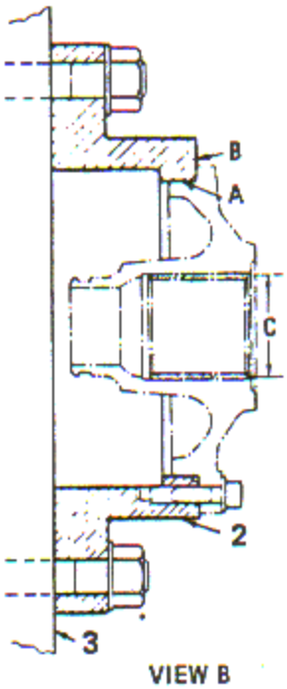

VIEW B

REMOVING REAR BUSHING

1. PULLER
2. FIXTURE
3. LATHE FACEPLATE
4. PLUG
5. WOOD PARALLEL
6. BENCH
7. BUSHING
8. STARTING DRILL
9. REAMER DRILL
10. REAMER
11. PLUG GAGE
12. PLUG GAGE
13. HOLDER
14. CUTTER
15. PILOT AND NUT
16. BORING BAR
17. TOOL BIT
18. BUSHING
19. PLUG
20. BUSHING
21. REAMER
22. PLUG GAGE

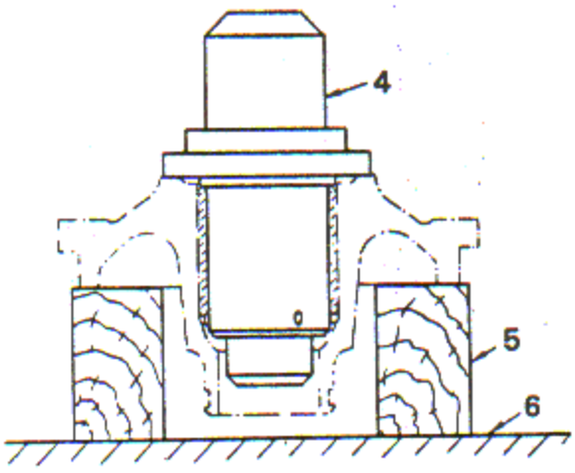

VIEW C

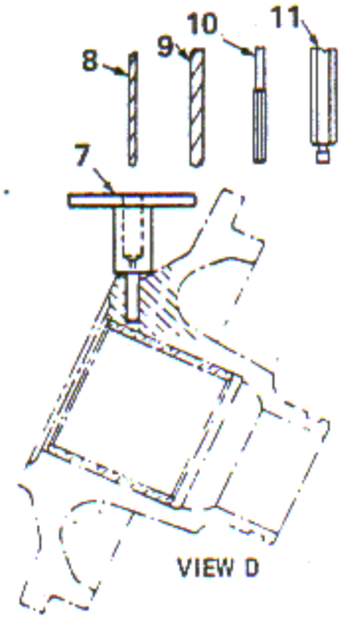

VIEW D

INSTALLING REAR BUSHING

Figure 6-213. Impeller Intermediate Drive Shaft Front and Rear Bushing Replacement (R1820-80 Series) (Sheet 1 of 3)

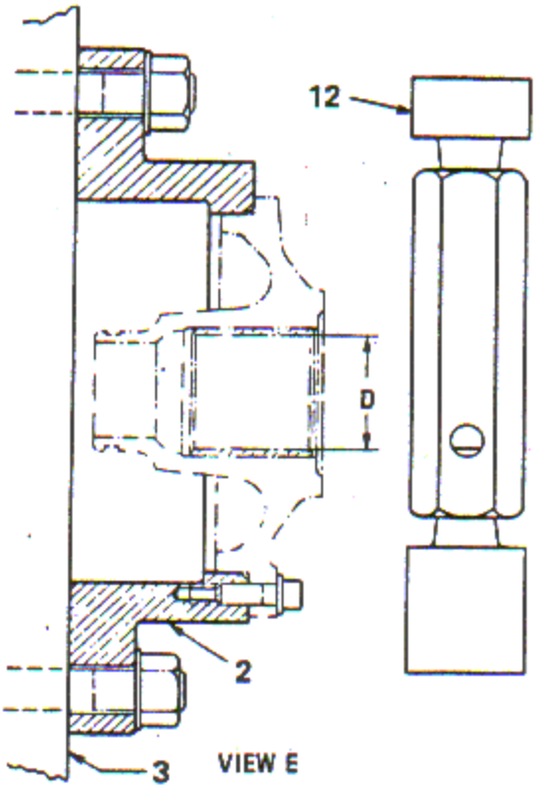

VIEW E

FINISH BORE REAR BUSHING

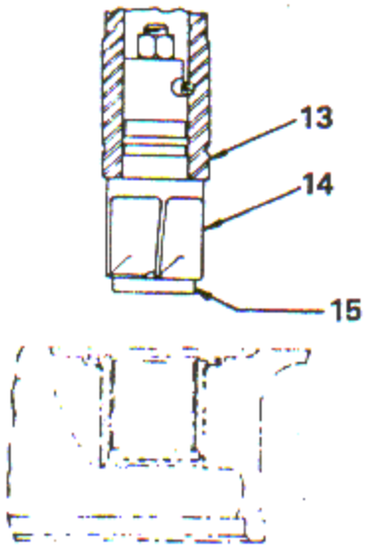

VIEW F

FRONT BUSHING REMOVAL

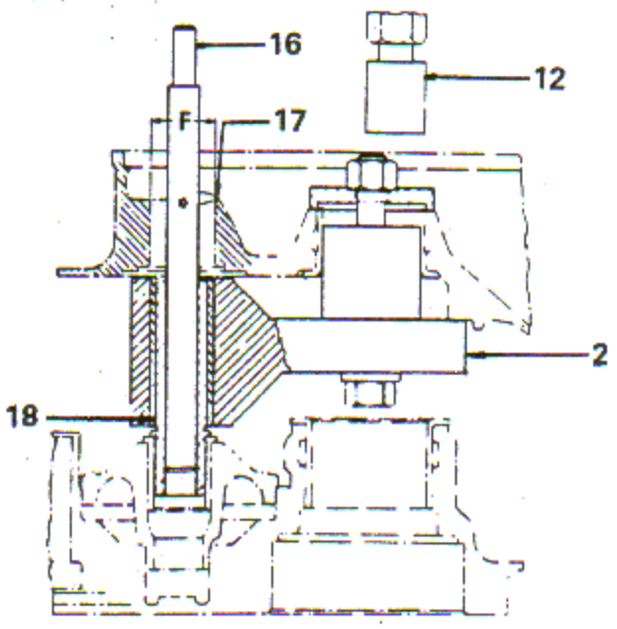

VIEW G

FINISH BORING FOR OVERSIZE FRONT BUSHING

Figure 6-213. Impeller Intermediate Drive Shaft Front and Rear Bushing Replacement (R1820-80 Series) (Sheet 2 of 3)

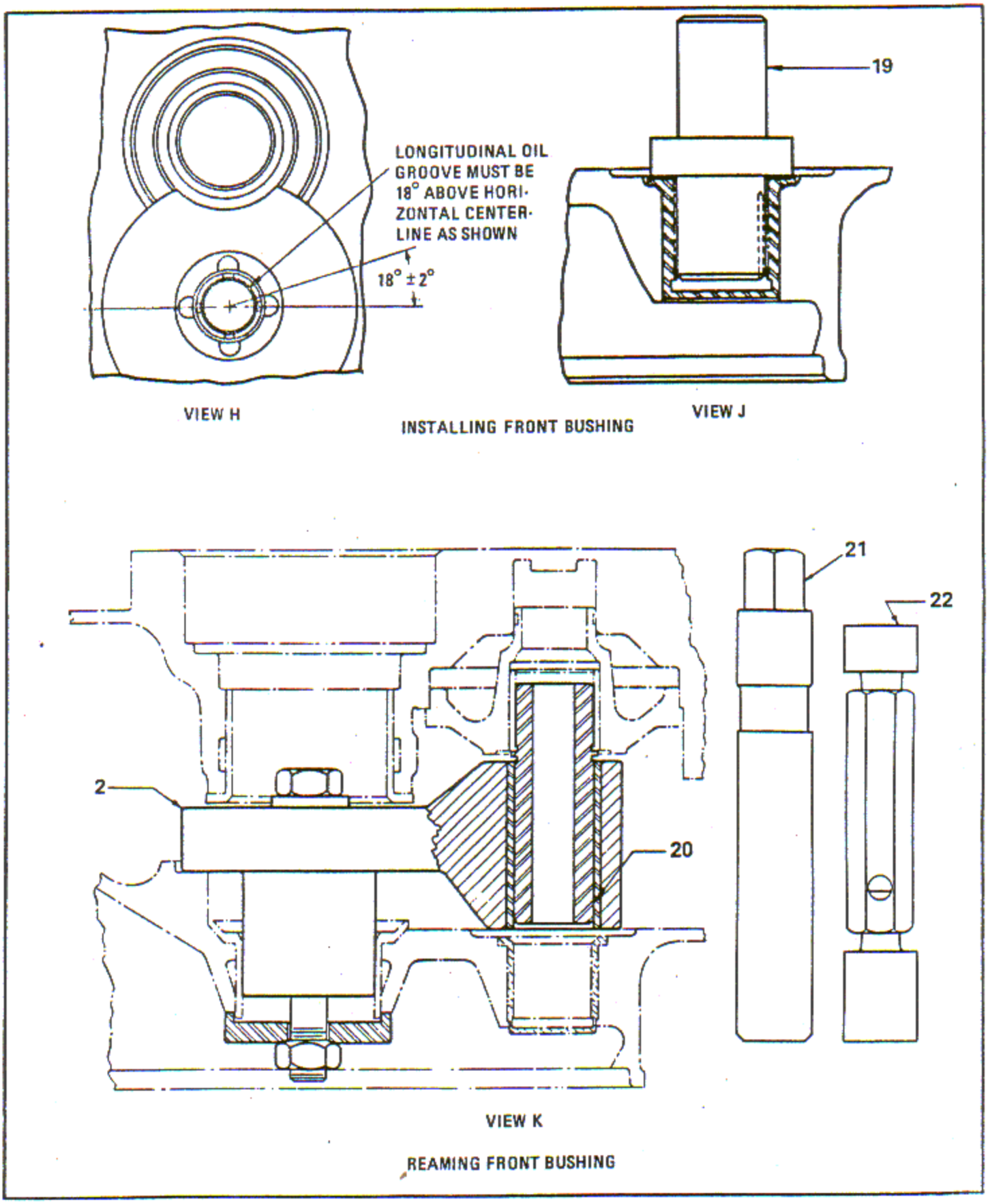

Figure 6-213. Impeller Intermediate Drive Shaft Front and Rear Bushing Replacement (R1820-80 Series) (Sheet 3 of 3)

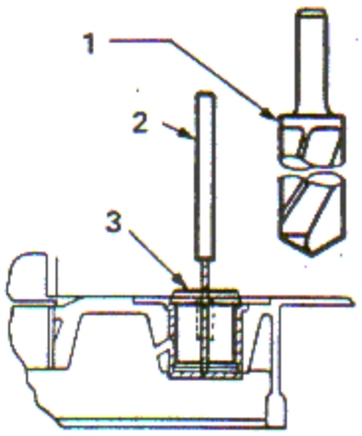

REMOVE BOTTOM OF FRONT BUSHING

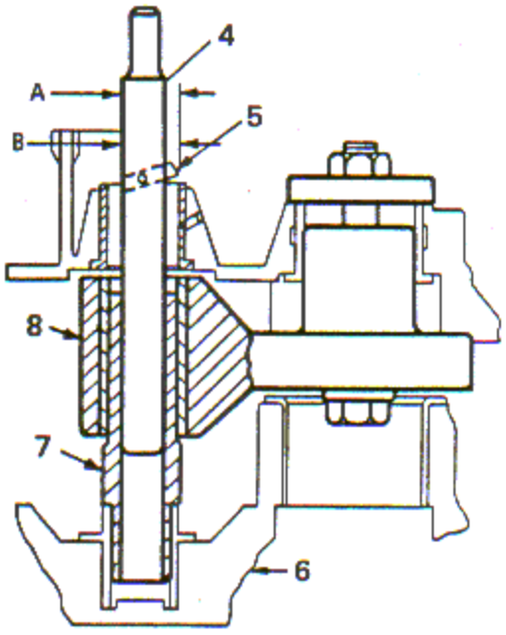

BORING OUT BUSHING

1. FINISHING DRILL
2. STARTING DRILL
3. BUSHING
4. BORING BAR
5. TOOL BIT
6. SUPERCHARGER REAR COVER
7. SLIP BUSHING
8. FIXTURE
9. FIXTURE PLUG

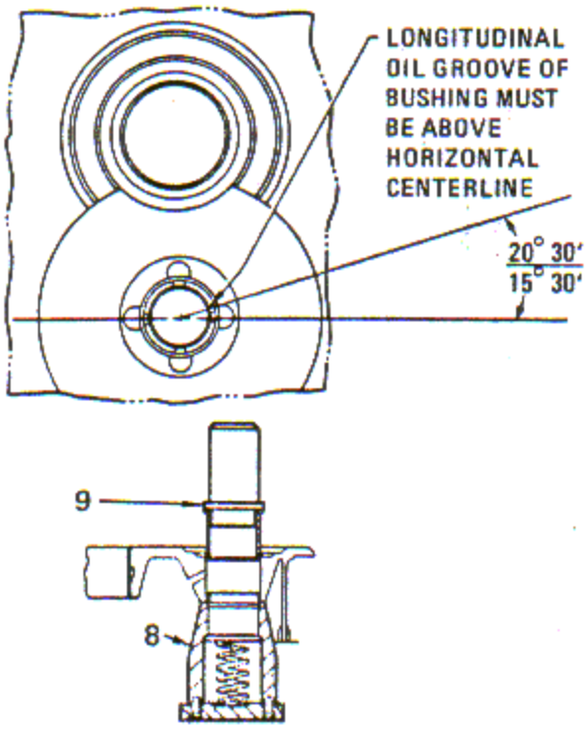

INSTALL NEW BUSHING

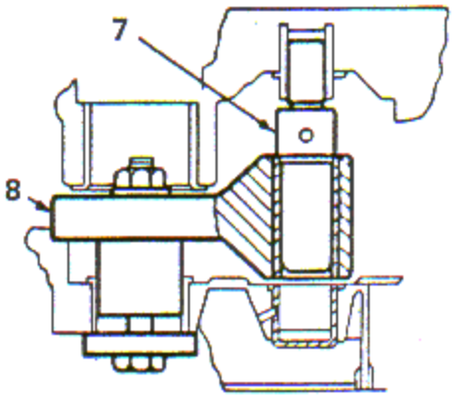

REAMING BUSHING

Figure 6-214. Impeller Intermediate Drive Shaft Front Bushing Replacement (R1820-76 Series, -86A, -86B)

d. Disassemble cover and pick out remaining bushing shell. Remove all burrs and peening.

6-685. Bore Housing for 0.010 Inch Oversize Bushing.

NOTE

Omit this operation if the hole is not worn or scored.

a. Reinstall fixture very lightly in housing with the slip bushing.

b. Assemble supercharger rear cover to housing aligning the slip bushing in intermediate impeller drive shaft rear bushing hole.

c. Clamp fixture securely. Set tool bit in boring bar with a micrometer to obtain a diameter of 1.509 - 1.510 inches and bore through. Check bore with gage. Break all sharp edges.

6-686. Install New Front Bushing in Housing.

a. Heat housing in hot oil or oven to 121°C (250°F).

b. Place plug (9, figure 6-214) of fixture D (8) in bushing (7), aligning the scribe mark on plug flange with the centerline of one of the michelles on the bushing flange. Place the housing on fixture as shown.

c. Chill bushing with fixture plug in accordance with standard procedures. Press in new bushing with fixture plug until the flange contacts the housing. Maintain pressure until bushing is tight in housing.

NOTE

Ensure that the longitudinal oil groove on the bushing is located 15° 30' - 20° 30' above the horizontal centerline, on the unloaded side of the bushing as shown.

6-687. Ream Bushing.

a. Install fixture C (8, figure 6-214) with slip bushing (7) in fixture as shown and clamp very lightly. Assemble cover to housing to align cover bushing with fixture slip bushing as shown. Clamp the fixture securely. Carefully remove cover from housing and slip bushing. Avoid disturbing clamped position of fixture.

b. Ream bushing in housing using reamer. Check reamed hole with gage. Remove sharp edges around end of reamed hole.

c. Dewax housing by heating to 135°C (275°F) and blow out with kerosene, Federal Specification VV-K-211, heated to 49°C (120°F) maximum, under 20 pounds pressure.

6-688. INTERMEDIATE IMPELLER DRIVE GEAR BUSHING REPLACEMENT (R1820-76 SERIES, -86A AND -86B). (See tool group 64.)

6-689. Remove Bushing.

a. Clamp the gear in a lathe chuck (1, figure 6-215) using heavy paper or soft sheet metal (2) to protect the gear teeth as shown.

b. Indicate the A surfaces to run true within 0.002 inch full indicator reading.

c. Bore the bushing to a maximum diameter at B of 1.230 inches. Pick out any remaining flange and shell.

6-690. Install New Bushing.

a. Heat the gear in a flameless oven or hot oil bath to 121°C (250°F). Chill the bushing using dry ice and alcohol or dry ice and gasoline for 30 minutes.

b. Place the bushing on the end of the gear having the short shoulder (3, figure 6-215) and press into place with the aid of a smooth parallel block (4). Protect the lower end of the gear as shown using heavy paper or soft sheet metal (2). Maintain pressure until the bushing is tightly retained.

c. Using a 0.001 inch feeler gage placed between the bushing flange and the gear, check to ensure proper seating of the bushing.

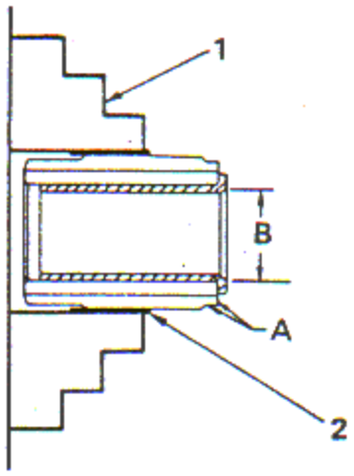

REMOVE BUSHING

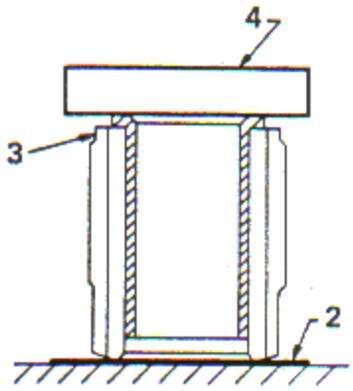

INSTALL NEW BUSHING

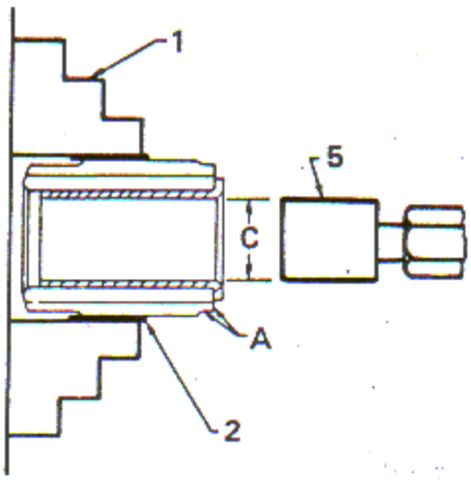

FINISH BORE BUSHING

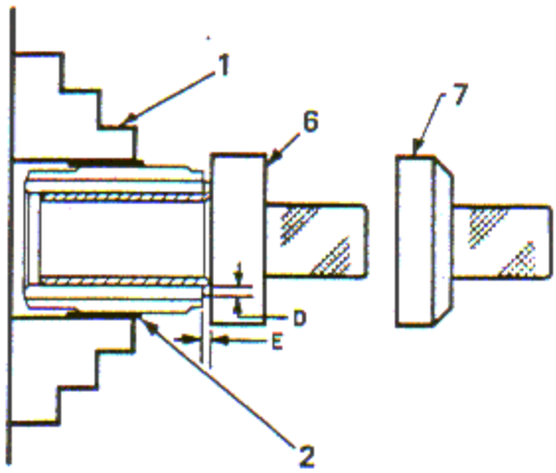

POLISHING FACE OF BUSHING

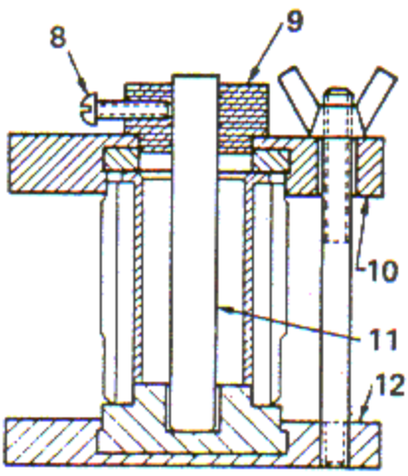

PLATING BUSHING BORE

1. LATHE CHUCK JAWS
2. HEAVY PAPER OR SOFT SHEET METAL
3. SHORT SHOULDER
4. PARELLEL BAR
5. PLUG GAGE
6. POLISHING TOOL
7. GAGE
8. FIXTURE ANODE HOLDER CLAMPING SCREW
9. FIXTURE ANODE HOLDER
10. FIXTURE CLAMP
11. ANODE
12. FIXTURE

Figure 6-215. Intermediate Impeller Drive Gear Bushing Replacement (R1820-76 Series, -86A, -86B)

6-691. Finish Bore Bushing.

a. Clamp the gear in a lathe chuck (1, figure 6-215) protecting the teeth as in the previous operation (2).

b. Indicate the A surfaces to run true within 0.0005 inch full indicator reading.

c. Finish bore the ID of the bushing to diameter C which is 1.1042 - 1.1048 inches.

d. Check the bore using gage (5). Do not remove the gear from the chuck.

6-692. Polish Bushing Face.

a. Using belt dressing or cement, attach crocus cloth, Federal Specification P-C-458, to polishing tool.

b. Polish the face of the bushing with the tool (6, figure 6-215) and kerosene, Federal Specification VV-K-211, or varsol, Federal Specification P-S-661, as a lubricant.

c. The bushing flange face must show at least 90 percent face contact with bluing gage (7) at D which will be 0.052 - 0.072 inch as shown. The remainder of the bushing face should show 50 percent minimum contact.

d. Using a depth micrometer, check dimension E to be 0.0985 - 0.1000 inch.

6-693. Lead-Tin Plate Bushing Bore.

a. Clamp gear in fixture E (12, figure 6-215).

b. Pour solution into gear bore until it reaches level of top of gear.

c. Clamp anode (11) in holder (9) and insert anode in gear.

d. Attach a wire to the anode holder clamping screw (8) for the positive contact and another wire around the gear teeth for the negative contact.

e. Refer to paragraph 6-862 for remainder of plating procedure as applicable to obtain a clearance with the mating part. Refer to reference 427, Table of Limits, Section IX, for fit.

6-694. INTERMEDIATE IMPELLER SHAFT DRIVE GEAR BUSHING REPLACEMENT (R1820-76 SERIES, -86A AND -86B). (See tool group 64.)

6-695. Remove Bushing.

a. Clamp the gear on the lathe faceplate (2, figure 6-216) as shown. Clamps (1) must not rest on external gear teeth and must be as close as possible to corner X. Indicate surface A to run true within 0.002 inch full indicator reading.

b. Bore out the inside diameter to dimension B which is 1.073 inches maximum. Remove remaining shell.

6-696. Install Bushing.

a. Check the gear and bushing to ensure that they are free from foreign material. Break the leading edge of the bushing to prevent shearing during assembly. Heat the gear in an oven or oil at 135°C (275°F) for one hour and chill the bushing using standard shop practices for 20 minutes.

b. Place the gear on base (5, figure 6-216) as shown. Press in the bushing using a wide smooth parallel block (4) and an arbor press (3). Maintain pressure until bushing and gear approach room temperature.

c. Check between the bushing flange and the gear hub with a 0.0015 inch feeler gage to determine if the bushing is properly seated.

6-697. Finish Bore Bushing.

a. Plug all oil passages with beeswax, Federal Specification C-B-191. Clamp gear on lathe faceplate (2, figure 6-216) as shown. Clamps (1) must not rest on external gear teeth and must be as close as possible to corner X. Indicate A surface to be within 0.001 inch full indicator reading.

b. Finish bore the bushing ID to dimension B which is 0.9382 - 0.9388 inch. Maintain a surface finish of 20 microinches rms or less. Break all sharp edges to a 0.005 - 0.015 inch radius.

c. Check the ID with gage.

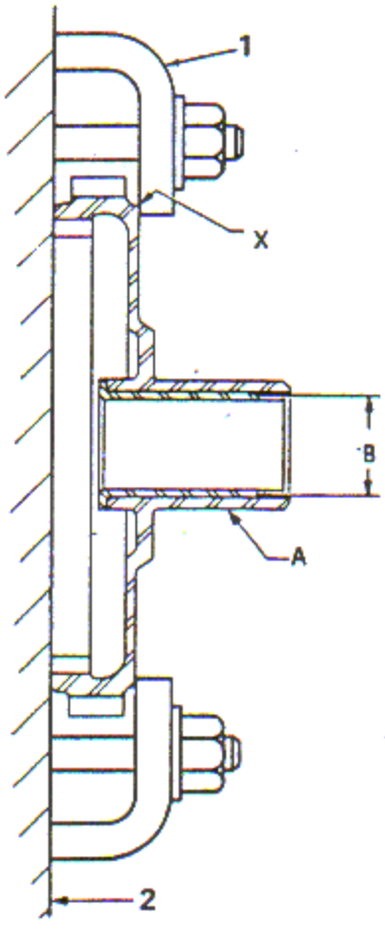

REMOVE BUSHING

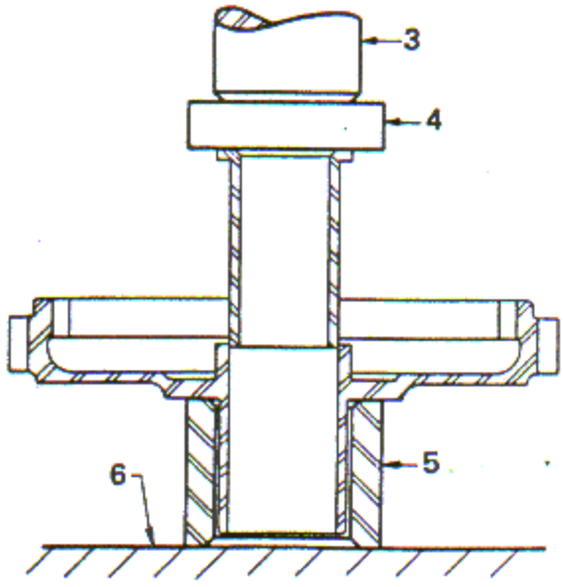

INSTALLING BUSHING

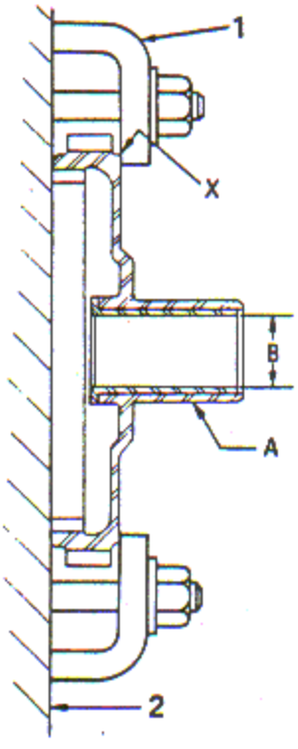

FINISH BORING

1. CLAMP
2. LATHE FACE PLATE
3. ARBOR PRESS RAM
4. PARALLEL BLOCK
5. BASE
6. ARBOR PRESS TABLE
7. HEAVY PAPER OR SOFT SHEET METAL
8. LEAD-TIN PLATE

Figure 6-216. Intermediate Impeller Shaft Drive Gear Replacement (R1820-76 Series, -86A, -86B) (Sheet 1 of 2)

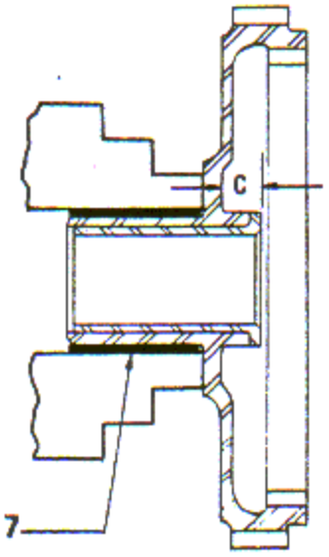

LAPPING

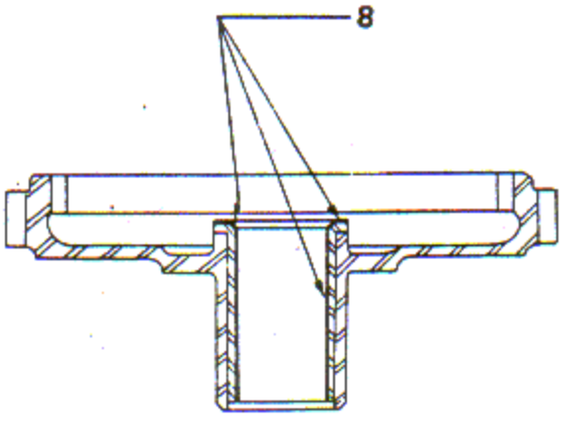

LEAD-TIN PLATING

Figure 6-216. Intermediate Impeller Shaft Drive Gear Replacement (R1820-76 Series, -86A, -86B) (Sheet 2 of 2)

6-698. Lap Bushing Face.

a. Hold the gear on the shank OD and against the shoulder face in a suitable speed lathe.

b. Lap the face of the bushing lightly with crocus cloth, Federal Specification P-C-458, to remove any scratches from previous operations. Hold dimension C in figure 6-216 to within 0.472 - 0.477 inch. Maintain a surface finish of 20 microinches rms or better.

c. Check dimension C with a suitable depth micrometer and a straight edge laid across the bushing flange.

6-699. Lead-Tin Plate Bushing.

a. Position the gear and bushing assembly on a suitable hook. Using beeswax, insulate all surfaces of the assembly except the bushing flange face and ID.

b. Lead-tin plate at 1.3 amperes for 7.5 minutes to produce the required thickness of 0.0004 - 0.0006 inch. The area to be plated is 6.5 square inches. See figure 6-216.

NOTE

For lead-tin plating procedures, solutions and control, refer to paragraph 6-862. Remove all insulating and plugging wax from the assembly and blow out all oil passages with a suitable warm solvent cleaner.

6-700. INTERMEDIATE IMPELLER DRIVE PINION JOURNAL RECONDITIONING (R1820-76 SERIES, -86A, -86B).

6-701. PROCEDURE.

a. Unless warrented due to excessive grooving or other surface imperfections, limit reconditioning of the intermediate impeller drive pinion journals to polishing with crocus cloth, Military Specification P-C-451, grade 320, or finer abrasive cloth, utilizing a suitable lathe and collet.

b. If grinding of the journal is required, mount one journal of the pinion in a collet on a suitable external grinder and indicate the exposed journal and adjacent gear shoulder to run true within 0.001 inch full indicator reading. Grind the journal only as required to remove surface imperfections. The journal may be reworked to a minimum diameter of 0.547 inch.

c. Remove the pinion, and without relocating the collet, reinstall the opposite end of the pinion. Without further adjustment, indicate the unreworked journal and adjacent shoulder to run true within 0.001 inch full indicator reading. If runout is excessive, reject the pinion. If runout is not excessive, grind the exposed journal to within 0.0005 inch of the diameter on the opposite journal, but not less than 0.547 inch.

6-702. IMPELLER LOW SPEED DRIVE CLUTCH CAM BUSHING REPLACEMENT (R1820-76 SERIES, -86A AND -86B). (See tool group 63.)

6-703. Removing Bushing. Place ring (1, figure 6-217) over the cam and bushing assembly. Secure protector in a lathe chuck (2). Indicate surfaces A and B to run true within 0.002 inch full indicator reading. Turn down the outside diameter of the bushing to the diameter shown. Leave a 0.010 inch wall. Pick off the remaining shell.

6-704. Installing Bushing. Press bushing on, using plug (3) as shown.

6-705. Facing Bushing. Place the assembly in the ring (1). Secure ring in a lathe chuck (2). Indicate surface C to run true within 0.002 inch full indicator reading. Face off end of the bushing as shown. Break all the sharp corners.

6-706. IMPELLER DRIVE MULTI-PLATE CLUTCH ADAPTER REPAIR (R1820-76 SERIES, -86A, -86B).

6-707. PROCEDURE.

a. Grind the clutch cam bushing surface to thrust washer contact surface of the adapter to clean up but not to exceed a minimum thickness of 0.539 inch.

b. Mate the reworked adapter with an appropriate clutch cam or chrome plate the adapter, depending on which of the following conditions exist.

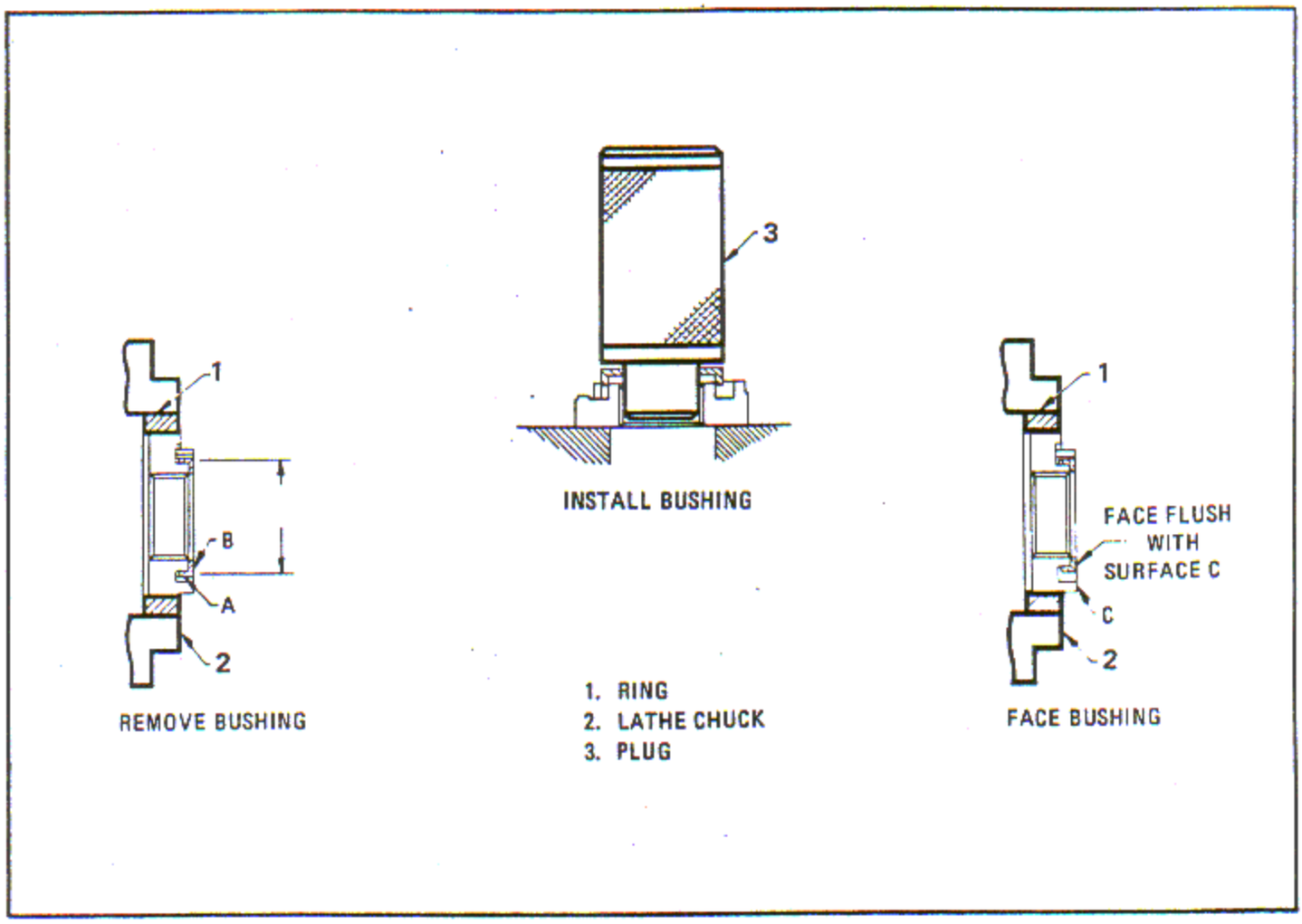

Figure 6-217. Impeller Low Speed Drive Clutch Cam Bushing Replacement (R1820-76 Series, -86A, -86B)

c. If the adapter thickness is 0.550 - 0.556 inch mate it with a 0.589 - 0.591 inch thick standard cam.

d. If the adapter thickness is 0.544 - 0.550 inch mate it with a non-standard 0.595 - 0.597 inch thick cam.

NOTE

A non-standard cam may be obtained by installing a new clutch cam bushing on the cam and grinding to the required thickness.

e. If the adapter thickness is 0.539 - 0.544 inch, chrome plate the adapter cam bushing contact surface up to a maximum finished plating thickness of 0.010 inch. Blend the sharp edge of the plating at the internal splines to a 0.018 inch approximate radius. Mate the adapter and cam as instructed in steps b and d.

NOTE

Exercise care to prevent plating of the splines. The reworked surface must be parallel to the thrust washer contact surface and square with the pitch diameters of the splines within 0.002 inch full indicator reading. Prior to installation remove any tin-cadmium plating present on the adapter thrust washer contact surface.

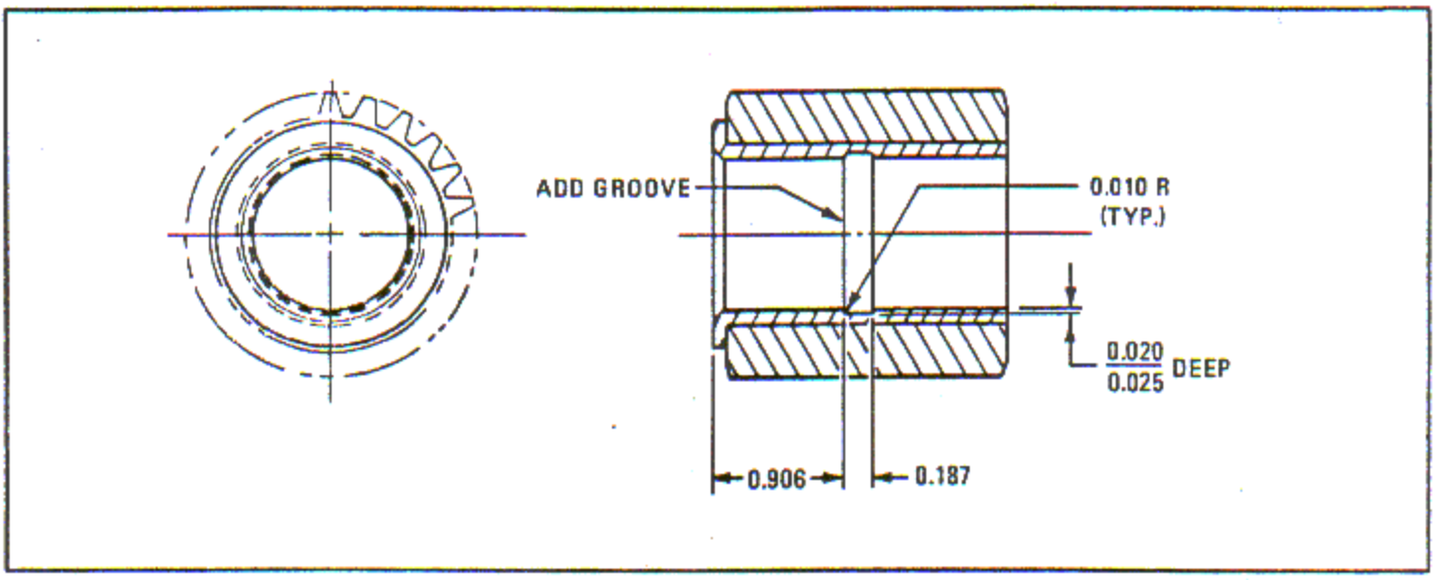

Figure 6-218. Reworking Supercharger Impeller Drive Pinion Gear Bushing

6-708. IMPELLER DRIVE MULTI-PLATE CLUTCH PLATE RECONDITIONING (R1820-76 SERIES, -86A, -86B).

6-709. PROCEDURE.

a. If the clutch plate thickness is 0.070 inch or greater, grit blast the faces in accordance with standard procedure using No. 120 grit. Surface finish after grit blast shall be 120 - 220 microinches rms.

b. Clutch plate thickness after grit blast shall be 0.071 - 0.075 inch.

6-710. IMPELLER DRIVE PINION GEAR BUSHING REWORK.

6-710A. Recondition the impeller drive pinion gear bushing to alleviate scoring or pitting of the bushing ID in the plane of the shaft oil holes in accordance with the following:

a. Machine an annular groove in accordance with figure 6-218.

b. Blend all sharp edges.

6-711. IMPELLER DRIVE MULTI-PLATE CLUTCH SLEEVE REWORK.

6-711A. Sleeves may be reconditioned by machining the ID up to a maximum of 4.065 inches. The ID must be smooth, circular within 0.001 inch, and have a surface finish of 20 microinch rms or better. If the above condition cannot be met, machine the ID to 4.073 - 4.074 inches. Finish and circularity requirements remain the same.

6-712. FUEL PUMP DRIVE SHAFT SUPPORT BUSHINGS REPLACEMENT. (See tool group 54.)

6-713. Remove Fuel Pump Drive Shaft Bushings.

a. Drive out the lock pins in the bushings using a suitable pin punch.

b. Clamp the support (3, figure 6-219) to a lathe faceplate (1) using clamps (2) as shown. Indicate the C surface to run true within 0.001 inch full indicator reading.

c. Bore out the bushing at D to a dimension which will leave approximately a 0.010 inch wall. Pick out the remaining shell and flange.

6-714. Install New Flanged Bushing.

a. Heat the support in an oven or hot oil bath to 135°C (275°F) for 30 minutes.

b. Chill the bushing in dry ice and alcohol or dry ice and gasoline for 20 minutes.

c. Place the support (3, figure 6-219) on the base (6) of plug and base, and assemble the bushing on plug of the same tool.

1. FACEPLATE
2. CLAMPS
3. SUPPORT
4. ARBOR PRESS RAM
5. PLUG
6. BASE
7. INSTALLING TOOL BLOCK
8. INSTALLING TOOL WEDGE
9. INSTALLING TOOL STOP-PIN
10. LATHE FACEPLATE

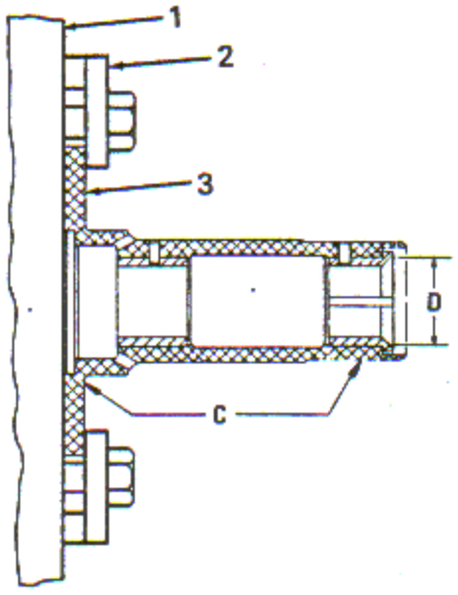

REMOVE BUSHING

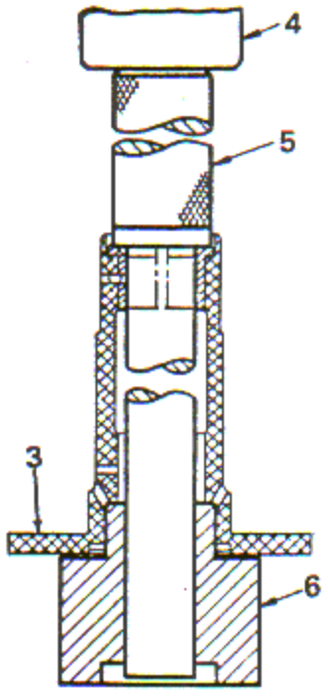

INSTALL FLANGED BUSHING

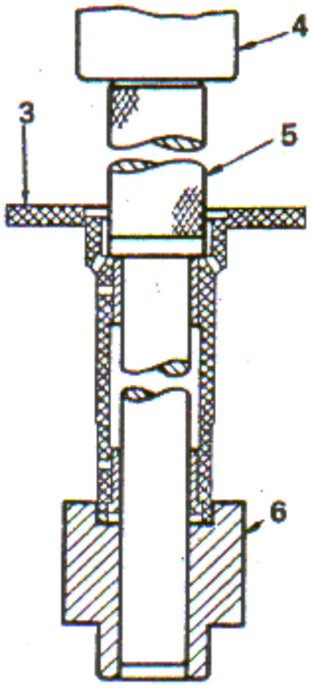

INSTALL PLAIN BUSHING

Figure 6-219. Fuel Pump Drive Shaft Support Bushing Replacement (Sheet 1 of 2)

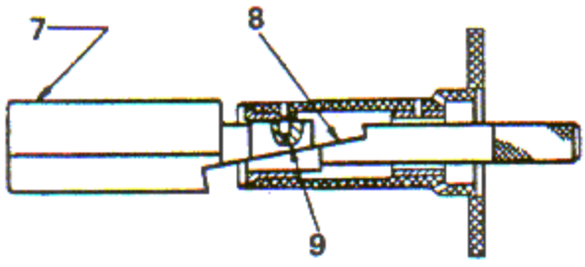

INSTALL LOCK PINS

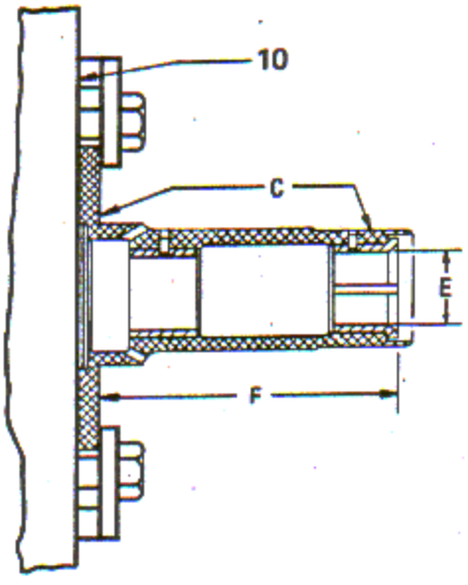

FINISH BORE AND FACE

Figure 6-219. Fuel Pump Drive Shaft Support Bushing Replacement (Sheet 2 of 2)

d. Line up oil holes in the bushing to be 90 degrees away from the pin hole in the support as shown in figure 6-219.

e. Press in the bushing and maintain pressure until the bushing and support are close to room temperature.

6-715. Install New Plain Bushing.

a. Heat the support in an oven or hot oil bath to 135°C (275°F) for 30 minutes.

b. Chill the bushing in dry ice and alcohol or dry ice and gasoline for 20 minutes.

c. Place the support (3, figure 6-219) on the base (6) of plug and base, and assemble the bushings on the plug (5) of the same tool.

d. Press in the bushing until the plug contacts the support as shown in figure 6-219, and maintain pressure until the support and bushing approach room temperature.

6-716. Install New Bushing Lock Pins.

a. Drill and ream pin holes in the bushings using the holes in the support as a guide for drill and reamer.

b. Clamp the block (7, figure 6-219) of installing tool in a vise and place the support with the reamed hole engaging the installing tool stop pin (9) as shown. Press the installing tool wedge (8) firmly in place and drive in the lock pin until the pin touches the stop pin using a suitable pin punch.

c. Peen the metal over at the outside of the support after inserting the pin.

d. Reverse the support on the installing tool block and repeat the operation for the other bushing lock pin.

6-717. Finish Bore and Face Bushings.

a. Clamp the support to a lathe faceplate (10, figure 6-219) using clamps as shown. Indicate C surfaces to run true within 0.0005 inch full indicator reading.

b. Bore the bushings to diameter E which is 0.9015 - 0.9025 inch. Check the bore using a telescoping gage.

c. Face the bushing flange to dimension F which is 3.732 - 3.734 inches. Check the height using a vernier depth gage.

d. Break all sharp edges and blend the corners of the oil grooves smoothly into the bore and the face of the bushing.

e. Clean the support and bushing assembly with petroleum solvent, Federal Specification P-D-680, and blow out with compressed air.

6-717A. FUEL PUMP DRIVE GEAR SUPPORT ASSEMBLY FUEL PUMP LOCATING RECESS REPAIR.

6-717B. GENERAL. If bushing requires replacement, replace the bushing and machine bushing and fuel pump locating recess in the same set-up on lathe.

a. Mount the support assembly against a faceplate on a lathe with the flat surface of the support facing out. Center support with an indicator on bushing ID, if bushing is satisfactory. If bushing is to be machined at the same time, center support on 1.375 - 1.376 inch ID oil seal recess. Center support within .001 inch full indicator reading. Take a light cut on 1.781 - 1.783 inch diameter recess to clean up the surface. If the resulting ID is no greater than 1.788 inch ID, and the chamfer is no larger than .030 inch, the support assembly is satisfactory for use on an engine.

b. If the ID is greater than 1.788 inch, machine a 1.9835 - 1.9840 inch diameter recess as shown on figure 6-219A, support assembly repair, fuel pump drive gear.

c. Machine a ring from mild steel, in accordance with figure 6-219A. Cadmium plate the ring as specified on the drawing.

d. A steel plate with a 1.780 - 1.800 inch diameter hole will be required to support the assembly in an arbor press. A steel disc 2.000 - 2.020 inch diameter will be required for pressing the ring in place.

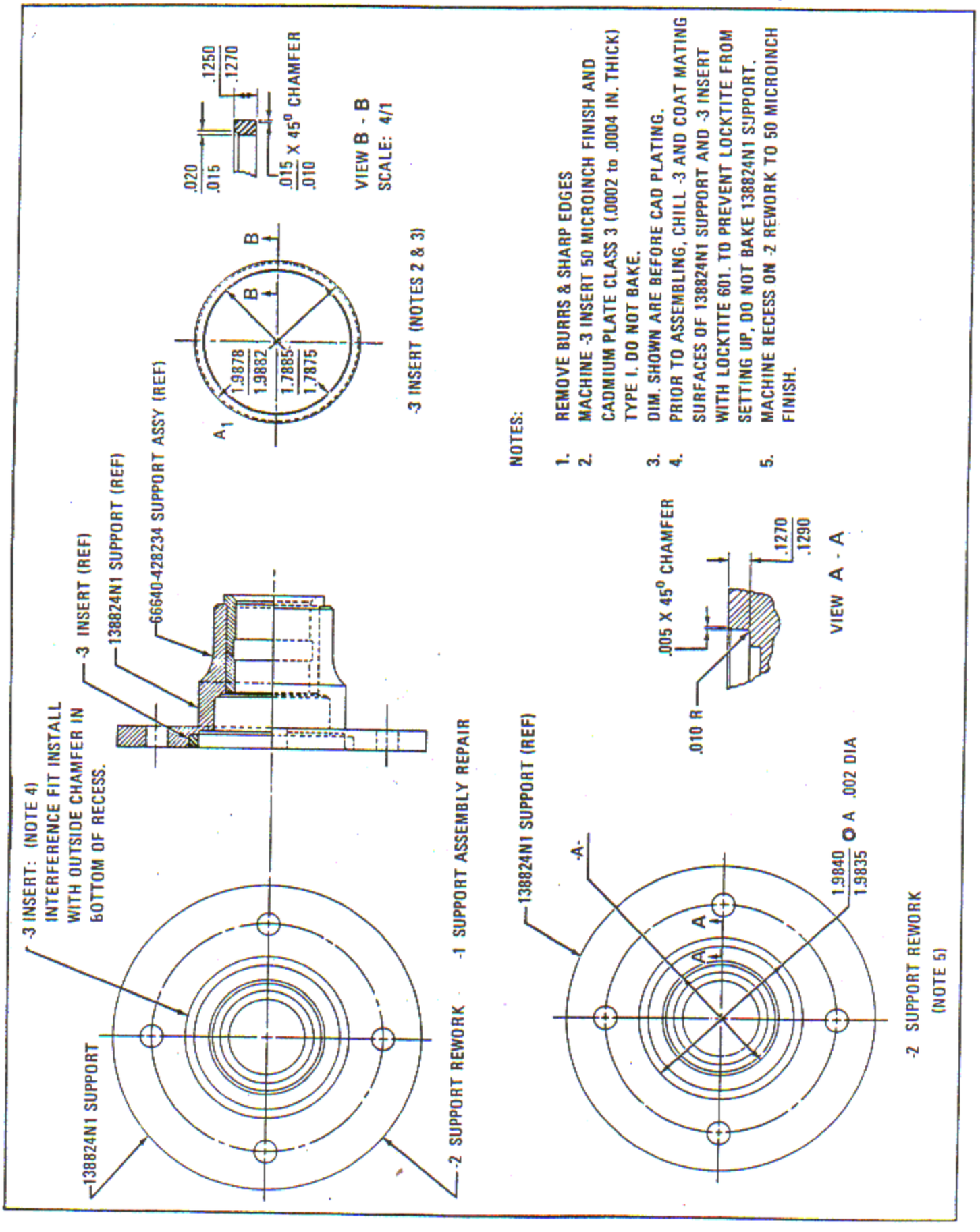

Figure 6-219A. Fuel Pump Drive Gear Support Assembly Repair

e. Cool the steel ring in dry ice and alcohol. Coat the recess in the support assembly with number 601 Loctite. Place the ring over the recess with the OD chamfer down. Using the tools of step d, press the ring into place at once while the ring is still cold. The ring should be flush with the surface of the support when pressed in place. When the assembly has returned to room temperature, measure the ID of the ring. If it is less than 1.7810 inch diameter, machine the ID to 1.781 - 1.783 inch after centering support in lathe.

6-718. SUPERCHARGER REAR HOUSING COVER RECONDITIONING.

6-718A. SUPERCHARGER REAR HOUSING COVER CRACK REPAIR. Cracks at the magneto drive and oil strainer housing bosses, not exceeding 1/8 inch in depth may be removed as follows.

a. Rout out the cracks using a rotary file.

b. Maintain a 1/8 inch minimum corner radius in the fillet area.

c. Reinspect the repaired sections using fluorescent penetrant. Replace the cover if cracks still exist after repair.

d. Prior to returning supercharger rear covers to service, drees all edges of the oil pump drain hole on the inner side of the cover to incorporate a 0.050 - 0.070 inch radius. Touch up the reworked area or recoat the rear cover in accordance with instructions of paragraph 6-899.

6-719. SUPERCHARGER REAR COVER REWORK AT DUAL ACCESSORY DRIVE PAD; Provision for a Drain Slot. Rework the supercharger rear cover by incorporating a drain slot on the rear surface of the cover at the accessory drive gear box pad. Machine a groove 0.38 inch wide by 0.05 inch deep using standard machine shop practices. See figure 6-220.

6-720. SUPERCHARGER REAR HOUSING COVER BOSS REPAIR. Supercharger rear cover machining and studding assemblies that are cracked or otherwise damaged in the area of the plug boss adjacent to the intermediate impeller drive shaft bushing bore may be repaired in accordance with figure 6-221.

6-721. SUPERCHARGER REAR HOUSING REWORK IN AREA OF MAGNETIC DRAIN PLUG ADAPTER BOSS. When the supercharger rear housing exhibits excessive wear or damage in the area of the magnetic drain plug adapter boss, repair the damaged area as follows:

a. Rework the damaged surface as shown in figure 6-222, view A.

b. Manufacture bushing, and pin as shown in view B.

c. Install bushing and pin as shown in view C.

6-722. SUPERCHARGER REAR COVER OIL STRAINER PILOT HOLE. Oversize or damaged holes shall be repaired as follows:

a. Bore the hole oversize as shown in figure 6-223. If a bushing had been installed previously, it must be removed.

b. Corrosion treat the newly machined surface in accordance with current local process specifications.

c. Insert a locally manufactured bushing, figure 6-223A, into the hole, assuring that it is bottomed. The bushing may be chilled to facilitate installation.

6-723. SUPERCHARGER REAR HOUSING COVER BUSHINGS REPLACEMENT.

NOTE

The rear cover bushings are shown and identified by name and letters in figure 6-224. Frequent references will be made to this figure in the replacement instructions outlined in paragraphs 6-724 through 6-754.

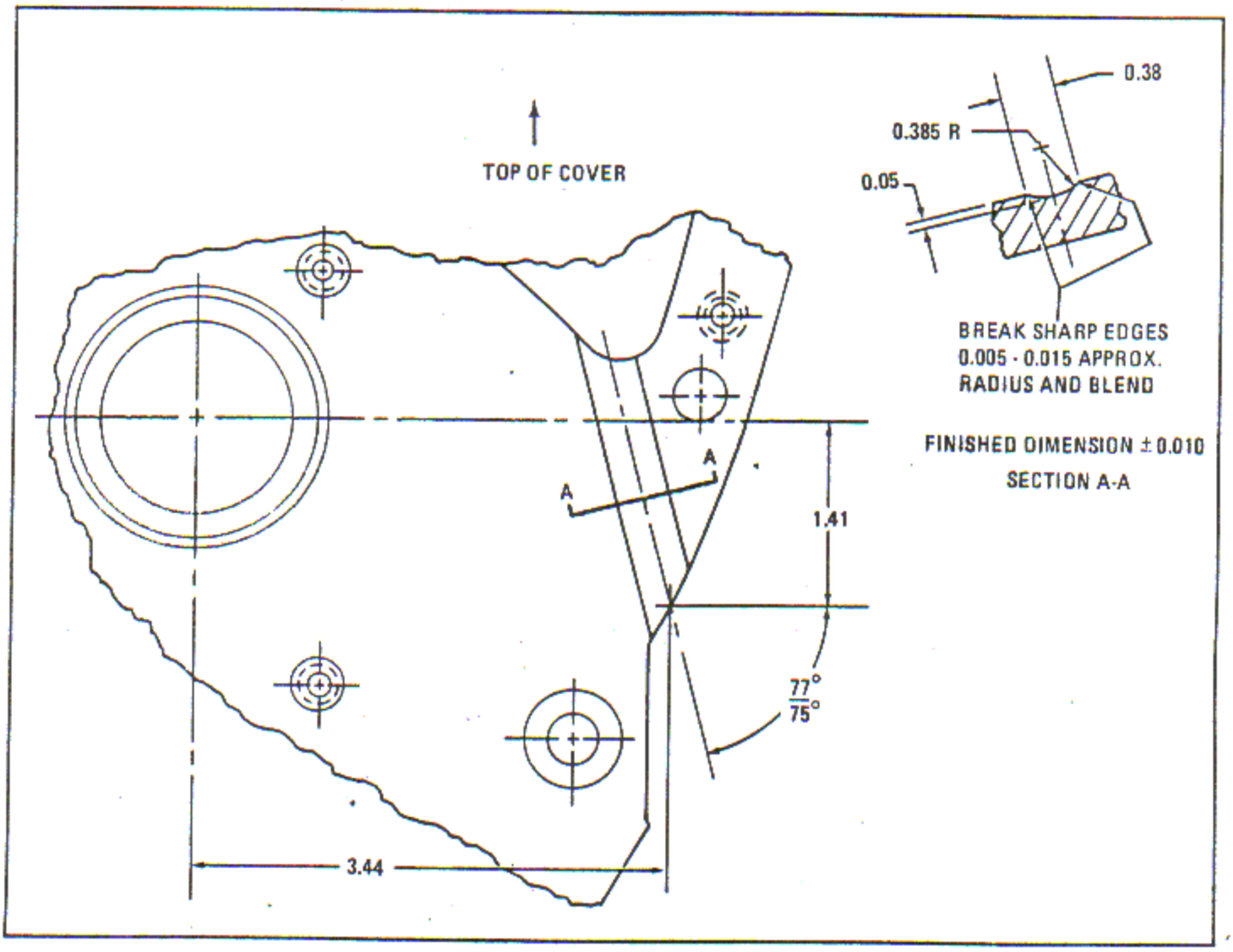

Figure 6-220. Machining Drain Slot in Supercharger Rear Cover

6-724. Remove the Bushing at Pad A. (See tool group 2.)

a. Plug oil passages with beeswax, Federal Specification C-B-191, or paraffin, Federal Specification VV-W-95.

b. Clamp the cover to the drill press or horizontal boring mill table, with parallels under front face of flange, in at least four equally spaced locations.

c. Indicate the rear cover attaching flange, starter pad and starter recess ID to be square and parallel as applicable within 0.002 inch full indicator reading.

d. If the starter pad is not square, remove studs and machine the surface within 0.002 inch full indicator reading and a surface finish of 80 microinches rms or better. Remove material only to clean up and bring pad surface within limits. Maximum stock removal is 0.100 inch from the original surface. The dimension J-J from the starter shaft oil retainer attaching pad face to the starter pad surface must be 1.620 inches minimum. Reinstall the studs. See figure 6-225.

e. Referring to view HH, set tool bit A (8) in boring bar (2) with a micrometer to obtain diameter K which is 2.639 - 2.659 inches, and assemble in adapter (1). Clamp adapter to pad A using engine studs, washers and nuts as shown.

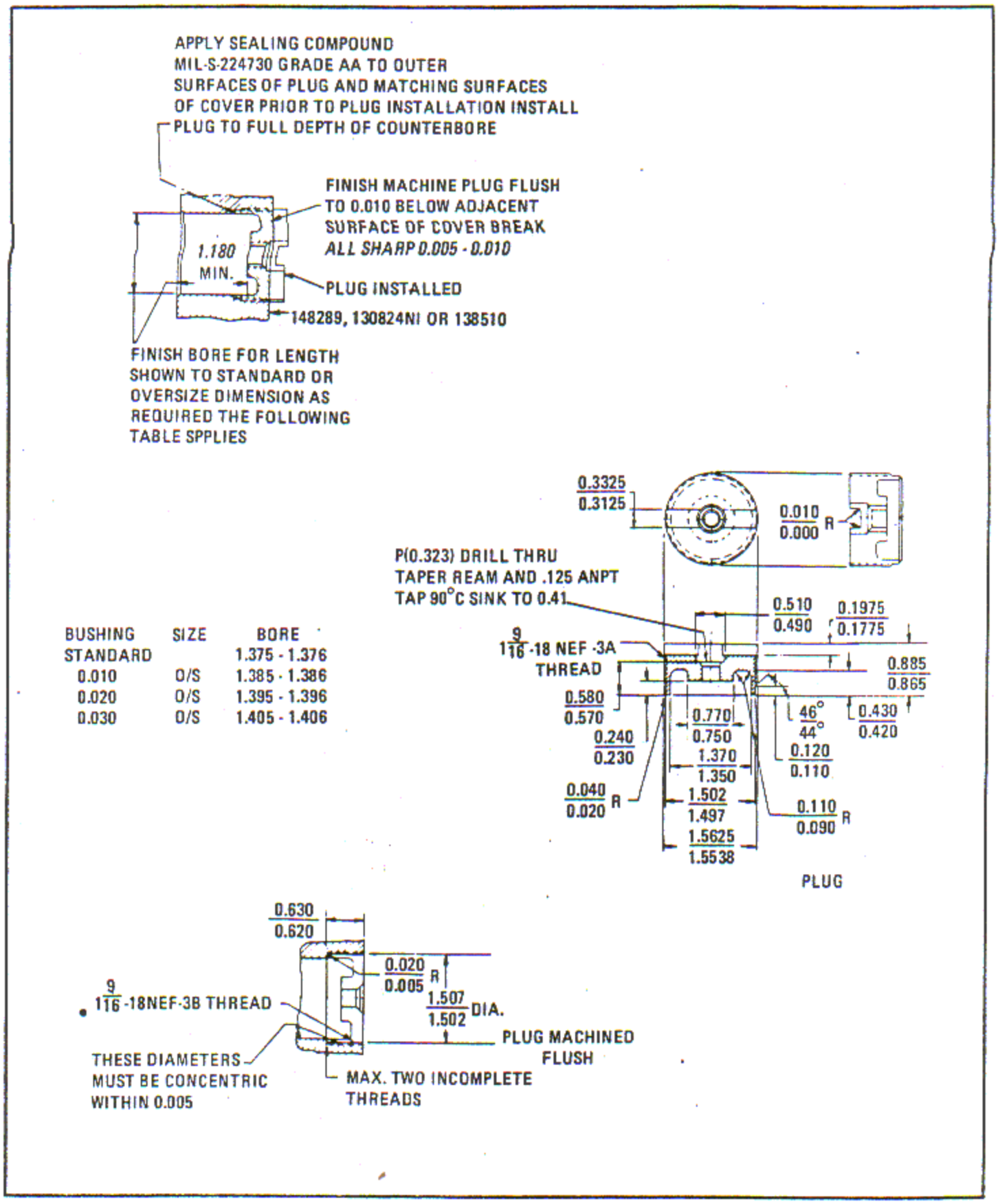

Figure 6-221. Reconditioning Supercharger Rear Housing Cover at Plug Boss

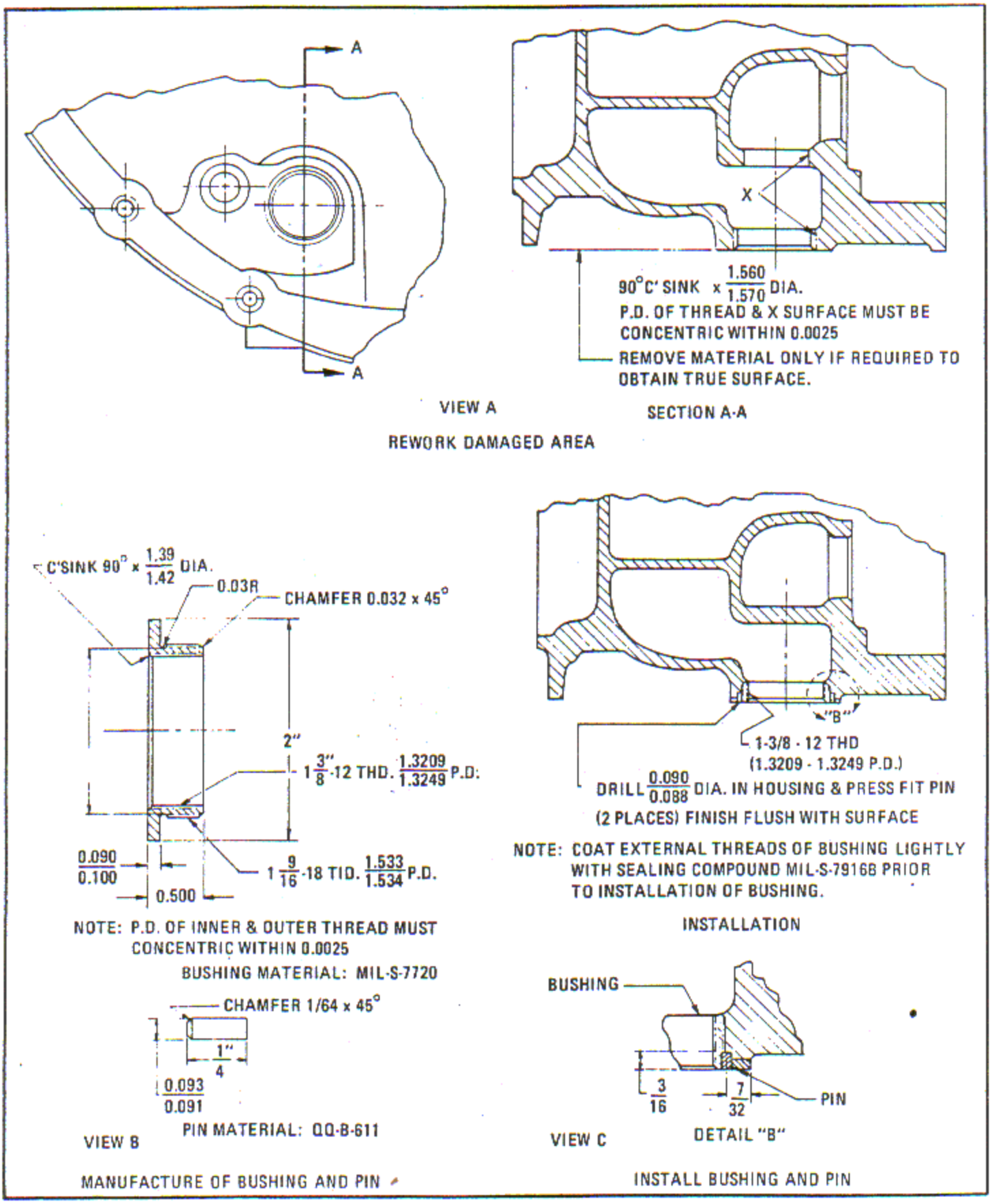

Figure 6-222. Supercharger Rear Housing Rework at Magnetic Drain Plug Adapter Boss

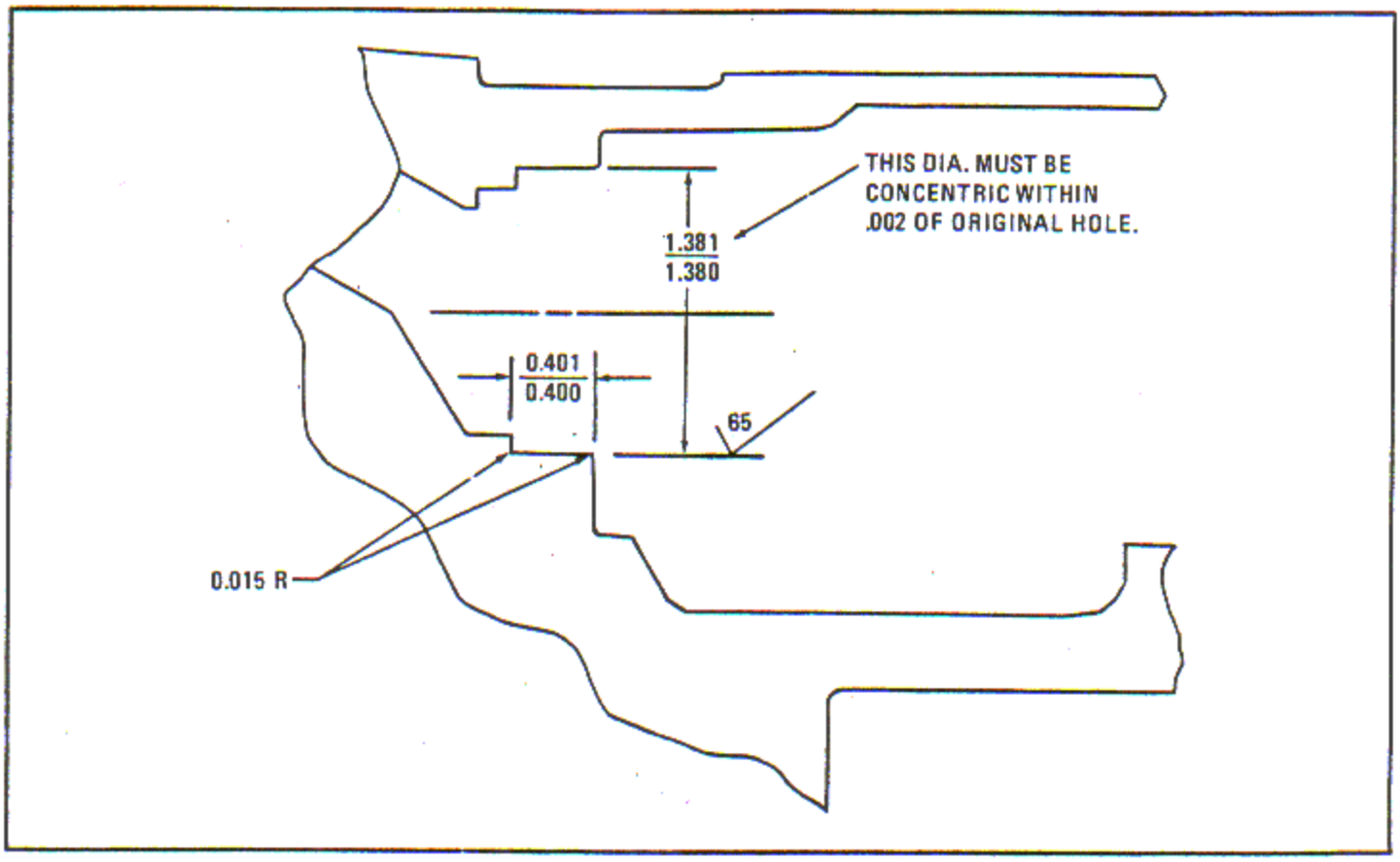

Figure 6-223. Supercharger Rear Cover Oil Strainer Pilot Hole, Rework

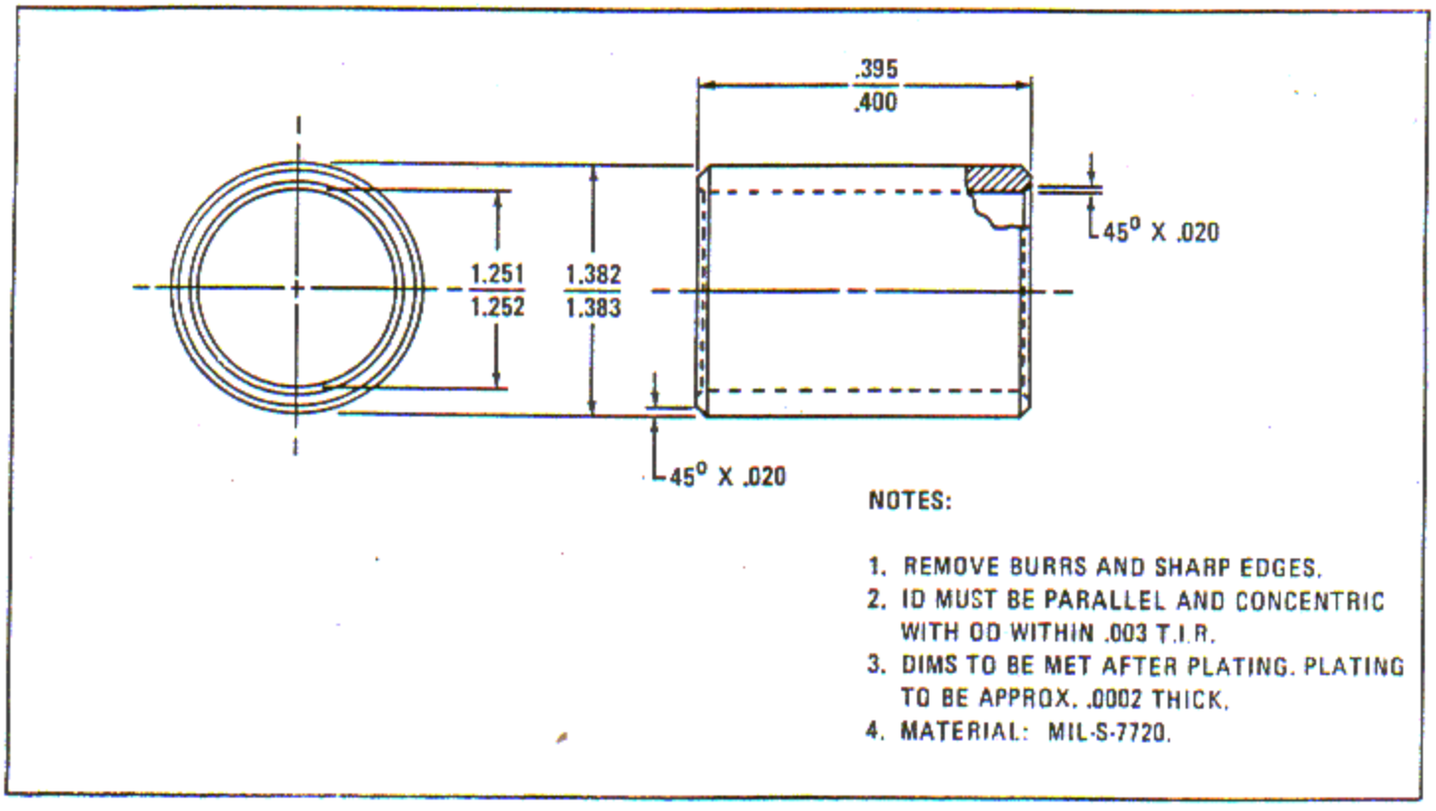

Figure 6-223A. Oil Strainer Pilot Hole Bushing

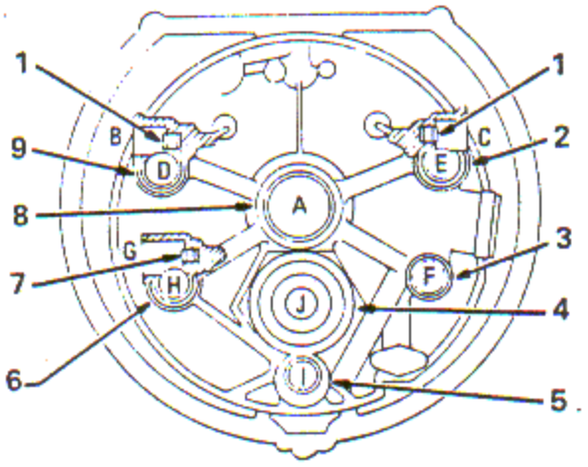

1. GUN SYNCHRONIZER DRIVE SHAFT THRUST BUTTON
2. LEFT HAND MAGNETO DRIVE SHAFT BUSHING
3. OIL PUMP DRIVE SHAFT BUSHING
4. INTERMEDIATE IMPELLER DRIVE SHAFT BUSHING
5. GENERATOR DRIVE SHAFT BUSHING
6. ACCESSORY DRIVE SHAFT BUSHING
7. TACHOMETER AND FUEL PUMP DRIVE SHAFT THRUST BUTTON
8. STARTER SHAFT BUSHING
9. RIGHT HAND MAGNETO DRIVE SHAFT BUSHING

Figure 6-224. Supercharger Rear Housing Cover Bushings

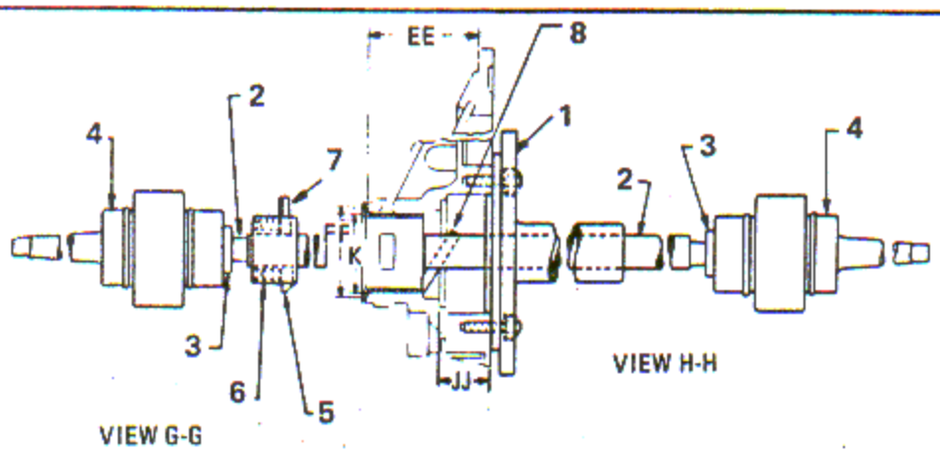

REMOVE BUSHING

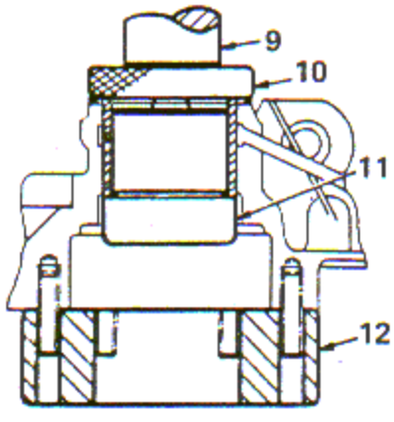

INSTALL NEW BUSHING

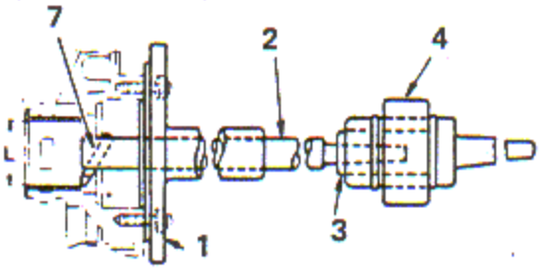

FINISH BORE BUSHING

1. ADAPTER
2. BORING BAR
3. COLLET
4. MAGIC CHUCK
5. CHAMFERING BIT
6. HOLDER
7. FACING TOOL BIT
8. BORING TOOL BIT
9. ARBOR PRESS RAM
10. NUT
11. PLUG
12. COLLAR

Figure 6-225. Remove, Install and Finish Bore Bushing at Pad A

f. Bore out first cut using collet (3, figure 6-225), magic chuck (4) and coolant consisting of one part of soluble oil and 12 - 24 parts of water.

g. Reset tool bit (8) to obtain diameter K which is 2.730 inches maximum and bore out second cut, remove old shell.

h. If the hole in the rear cover is too large to provide a 0.005 - 0.007 inch shrink fit, or if the bushing hole is excessively scored, rebore to the following dimensions: 2.760 - 2.761 inches diameter for a 0.010 inch oversize OD bushing and 2.780 - 2.781 inches diameter for a 0.030 inch oversize OD bushing. Check with inside micrometers. This operation may be done by using the same tools and resetting the tool bit. Chamfer rear end of hole at diameter FF which is 2.875 - 2.915 inches using chamfered tool bit B (5) shown in view GG with the exception of tool bit C and holder.

i. Remachine the face of the starter bushing boss if the face is excessively worn or scored. Clamp the rear cover in at least four equally spaced locations with the starter bushing boss face up. Indicate the rear cover attaching flange face to starter bushing boss, and ID of starter bushing boss bore to be square and parallel as applicable within 0.002 inch full indicator reading. Use the tools shown in view GG. Face the boss, removing material only as required to clean and true up the surface. Chamfer the rear end of the hole 45 degrees to diameter FF which is 2.875 - 2.915 inches. If dimension EE is equal to or greater than 2.820 inches, install a bushing with a standard flange thickness. If dimension EE is between 2.790 and 2.820 inches, install a bushing with a 0.030 inch oversize flange thickness. If dimension EE is less than 2.790 inches, reject the supercharger rear cover.

6-725. Install New Bushing at Pad A.

a. Place bushing on plug (11, figure 6-225) and clamp tightly using nut (10). Immerse in dry ice and alcohol or dry ice and gasoline for 20 minutes.

b. Heat the cover in an oven or hot oil bath at 135°C (275°F) for 30 minutes.

c. Place cover supported on collar (12) on arbor press table as shown. Line up one of the through slots in bushing central with main oil feed hole from the oil strainers.

d. Press in bushing with plug (11) until flange contacts cover. Maintain pressure until bushing is tight in the cover.

e. Check with 0.001 inch feeler gage between bushing flange and cover to ensure that bushing is properly seated.

6-726. Finish Bore Bushing at Pad A.

a. Plug oil passages with beeswax or paraffin.

b. Clamp the cover to drill press or horizontal boring mill table with parallels under front face of flange.

c. Set tool bit A (7, figure 6-225) in boring bar (2) with a micrometer to obtain diameter L, which is 2.564 - 2.565 inches and assemble in adapter (1). Clamp the adapter to pad A using engine studs, washers and nuts as shown.

d. Finish bore bushing using collet (3), a magic chuck (4) and coolant consisting of one part soluble oil and 12 - 24 parts of water.

e. Check with an inside micrometer. Break all sharp corners. Remove wax or paraffin by heating cover to 100°C (212°F) for 20 minutes and blow out with kerosene, heated to 49°C (120°F), with approximately 20 pounds pressure.

NOTE

An alternate method of removing wax or paraffin is to heat to 100°C (212°F) for twenty minutes, then wash in kerosene and vapor degrease.

6-727. Tap Drill Thrust Button at B and C. (See tool group 58.)

a. Plug oil passages with beeswax or paraffin.

b. Clamp the cover supported on parallels to the side of the radial drill press table. Insert collar (2, figure 6-226) in the hole above thrust button. Place an 11/16 inch diameter drill (1, figure

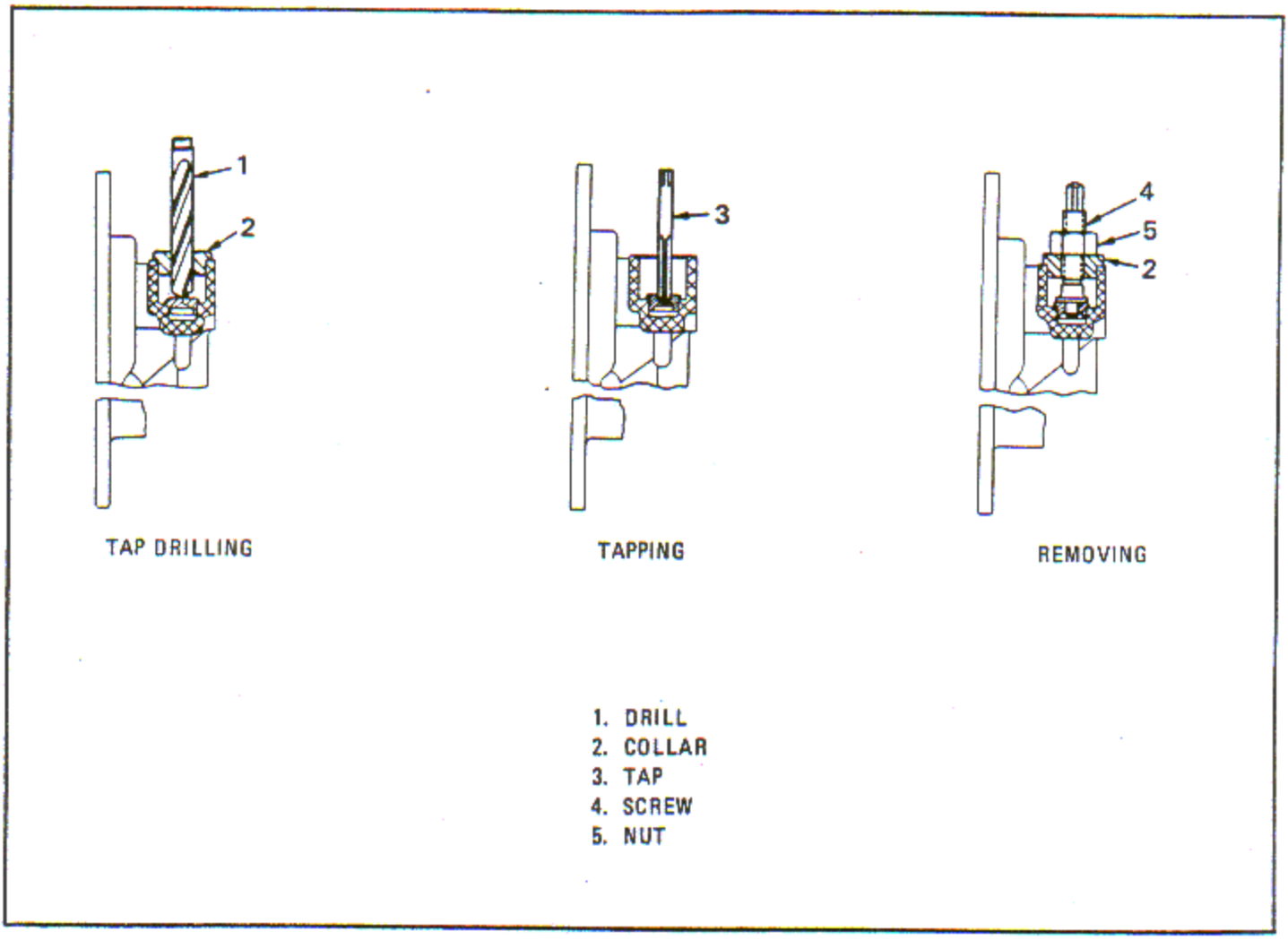

Figure 6-226. Tap Drill, Tap and Remove Thrust Button at B and C

6-226) in drill press spindle and align with hole in the collar (2). Spot drill the thrust button.

c. Remove the collar (2) and replace the drill (1) with a 13/64 inch diameter drill. Drill through the thrust button until drill breaks through being careful not to drill into the cover. Leave the cover in clamped position for tapping and removal of the thrust button.

6-728. Tap Thrust Button at B and C. With the cover clamped to the drill press table, tap the drilled hole in the thrust button, using tap (3).

6-729. Remove Thrust Button at B and C. With the cover still clamped to drill press table, insert the screw (4) of screw and nut into tapped hole of thrust button and assemble collar (2) and the nut (5) as shown. Remove the thrust button using standard wrenches.

6-730. Remove Bushings at Pads D and E. (See tool group 58.)

a. Clamp the cover to drill press or horizontal boring mill table with parallels under front face of flange.

b. Set tool bit (5, figure 6-227) in boring bar (2), checking with micrometers to obtain diameter M, which is 1.345 - 1.355 inches and assemble in adapter (1).

c. Clamp adapter (1) to pad D or E using engine washers, nuts and one 5/16 inch diameter by 1-1/4 inch long hexagon head screw with nut.

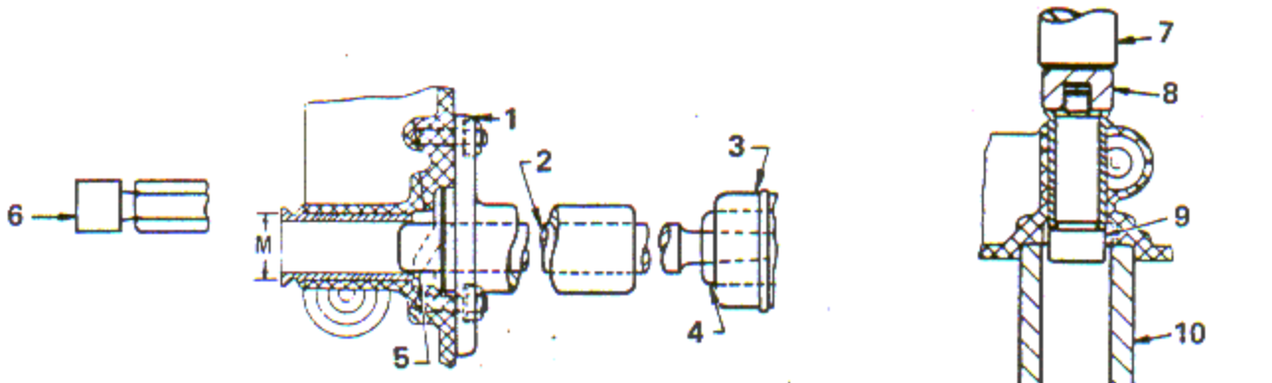

REMOVING

INSTALLING NEW BUSHINGS

1. ADAPTER
2. BORING BAR
3. MAGIC CHUCK
4. COLLET
5. TOOL BIT
6. GAGE
7. ARBOR PRESS RAM
8. NUT
9. PLUG
10. COLLAR
11. CUTTER

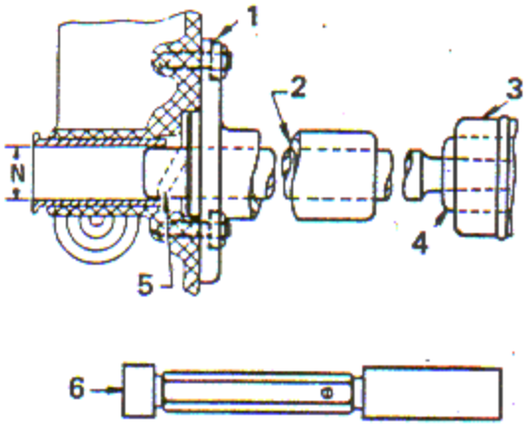

FINISH BORE

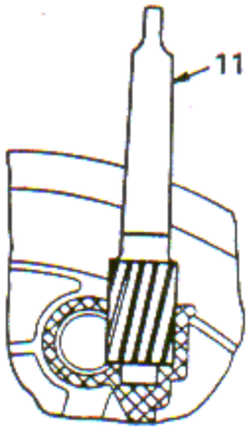

QUARTER CUT

Figure 6-227. Remove, Install, Finish Bore and Quarter Cut Bushings at Pads D and E

d. Bore out first cut using collet (4, figure 6-227), a magic chuck (3) and coolant consisting of one part soluble oil and 12 to 24 parts water.

e. Reset tool bit (5) to obtain diameter M, which is 1.418 inches maximum and bore out second cut. Remove remaining shell.

f. If the hole in the cover is too large to provide a 0.001 - 0.003 inch shrink fit or if the hole is excessively scored, rebore to 1.4465 - 1.4475 inches diameter for a 0.010 inch oversize OD bushing or to 1.4565 - 1.4575 inches diameter for a 0.020 inch oversize OD bushing. This operation may be done by using the same tools and resetting the tool bit. Check with proper plug gage.

6-731. Install New Bushings at Pads D and E.

a. Place the bushing on the plug (9, figure 6-227) and clamp tightly using plug and nut (8). Immerse in dry ice and alcohol or dry ice and gasoline for 20 minutes.

b. Heat the cover in an oven or oil bath at 135° C (275° F) for 30 minutes.

c. Place cover supported on plug (9) and collar (10) on arbor press table.

d. Press in the bushing until its flange contacts the cover. Maintain pressure until the bushing is tight in cover.

e. Check with 0.001 inch feeler gage between bushing flange and cover to ensure that the bushing is properly seated.

6-732. Finish Bore Bushings at Pads D and E.

a. Plug oil passages with beeswax or paraffin.

b. Clamp the cover to drill press or horizontal boring mill table with parallels under front face of flange.

c. Set tool bit (5, figure 6-227) in boring bar (2) with a micrometer to obtain diameter N, which is 1.2175 - 1.2185 inches and assemble in adapter A (1). Clamp the adapter to pad D or E using engine washers, nuts and one 5/16 inch diameter by 1-1/4 inch long hexagon head screw and nut.

d. Finish bore bushing using collet (4), a magic chuck (3) and coolant consisting of one part soluble oil and 12 to 24 parts water.

e. Check with gage (6).

6-733. Quarter Cut Bushings at Pads D and E.

a. Clamp the cover supported on parallels to side of radial drill press table.

b. Insert roughing cutter (11, figure 6-227) in spindle and quarter cut the bushing to the bottom of counterbore. Do not remove any metal from cover.

c. Replace the roughing cutter with finishing cutter and quarter cut the bushing to the same depth.

d. Break all sharp corners.

6-734. Enlarge Bores for Thrust Button at B and C. (See tool group 58.)

NOTE

Omit this operation if thrust button bores are not scored or out-of-round.

a. With the cover clamped to a radial drill press table as in the previous operation, plug all passages with beeswax or paraffin. Insert drill bushing (2, figure 6-228) in hole above thrust button bore.

b. Place the reamer (1) in drill press spindle and align with hole in bushing. Ream to a depth of 1.660 - 1.720 inches.

6-735. Install New Thrust Button at B and C.

a. With the cover clamped to a radial drill press table as in the previous operation, drive in new, proper thrust button using punch (3, figure 6-228) and a hammer as shown.

b. Dewax by heating the cover to 100° C (212° F). Blow out with kerosene heated to 49° C (120° F) with approximately 20 pounds pressure.

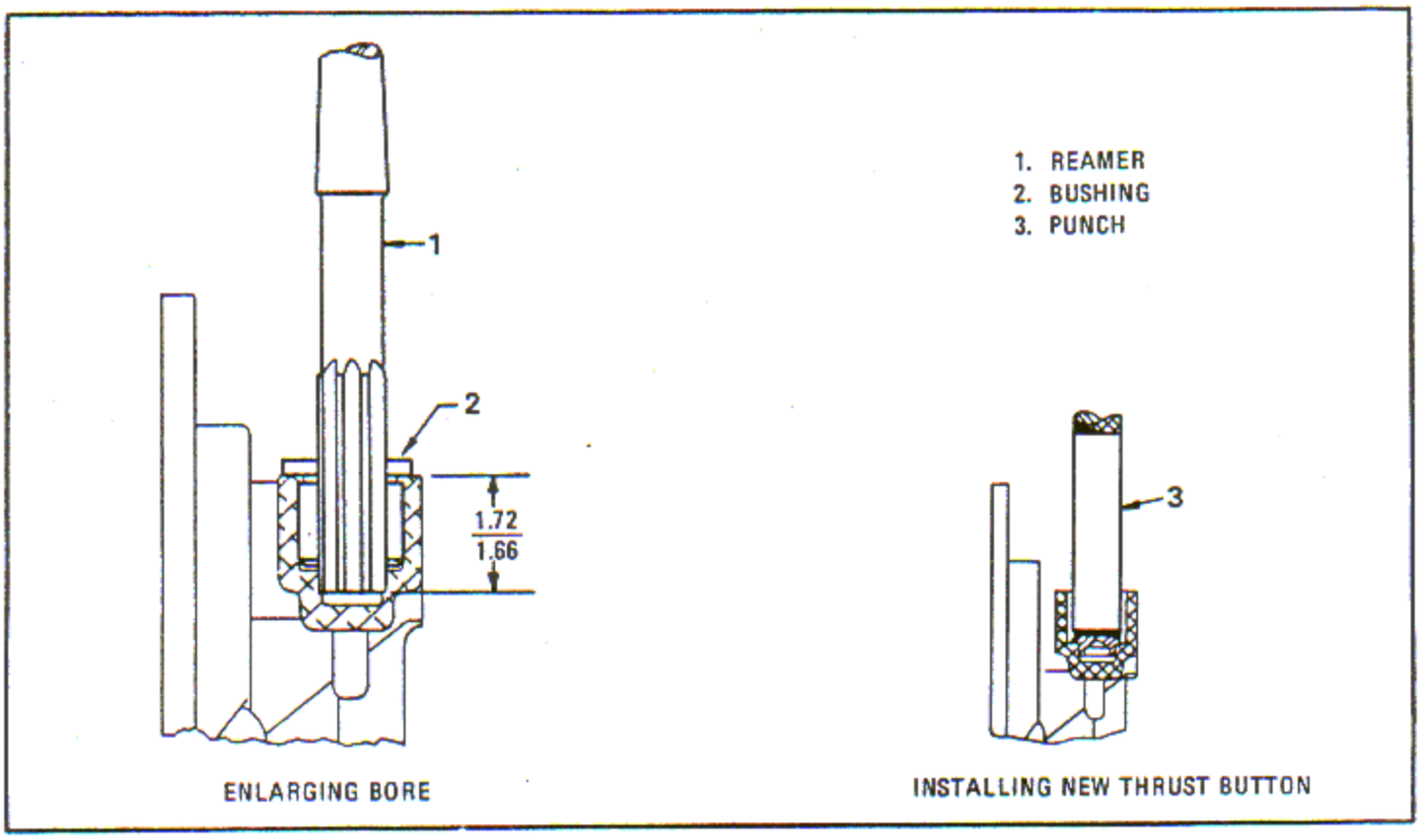

Figure 6-228. Enlarging Bore and Installing Thrust Button at Pads B and C

6-736. Remove Bushing at Pad F. (See tool group 89.)

a. Plug oil passages with beeswax or paraffin.

b. Clamp the cover to drill press or horizontal boring mill table with parallels under front face of flange.

c. Set the tool bit (1, figure 6-229) in boring bar (3) with a micrometer to obtain diameter Q, which is 1.345 - 1.355 inches and assemble in adapter (7).

d. Clamp the adapter (7) to the cover using engine washers, nuts and the proper spacers as required.

e. Bore out the first cut using collet (5) and a magic chuck (4) and coolant consisting of one part soluble oil and 12 to 24 parts of water.

f. Reset the tool bit (1) to obtain diameter Q, which is 1.417 inches maximum and bore out second cut. Remove remaining shell.

g. If the hole in the cover is too large to provide a 0.001 - 0.0035 inch shrink fit or if the hole is excessively scored, rebore for oversize bushings and check with the proper gage (6). See the following list for bore dimensions.

Bushing	Bore
0.010 inch OD	1.4465 - 1.4475 inch
0.020 inch OD	1.4565 - 1.4575 inch

h. Start at the front side of cover, boring as close to the adapter pilot as possible so that remaining part of bore is left intact. This operation may be done by using the same tool and resetting tool bit.

6-737. Install New Bushings at Pad F.

a. Place the bushing on plug (11, figure 6-229), so that the ball engages the oil groove of the bushing. Clamp tightly using the nut (9) and spacer (10) as shown.

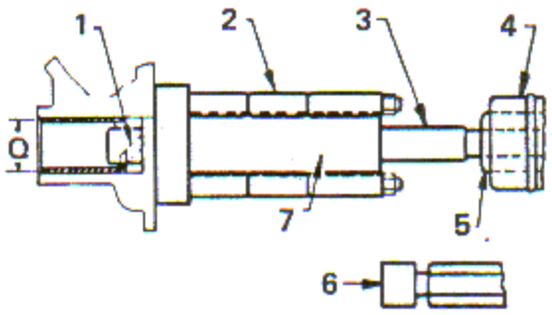

REMOVAL

1. TOOL BIT
2. ADAPTER SPACER
3. BORING BAR
4. MAGIC CHUCK
5. COLLET
6. GAGE
7. ADAPTER
8. ARBOR PRESS RAM
9. NUT
10. SPACER
11. PLUG
12. BASE

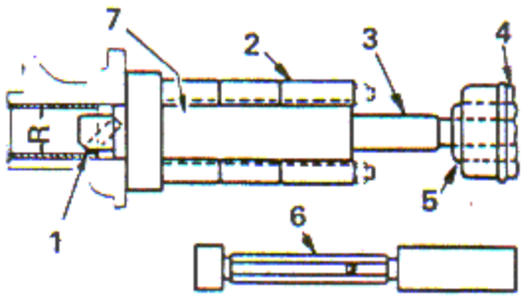

FINISH BORE

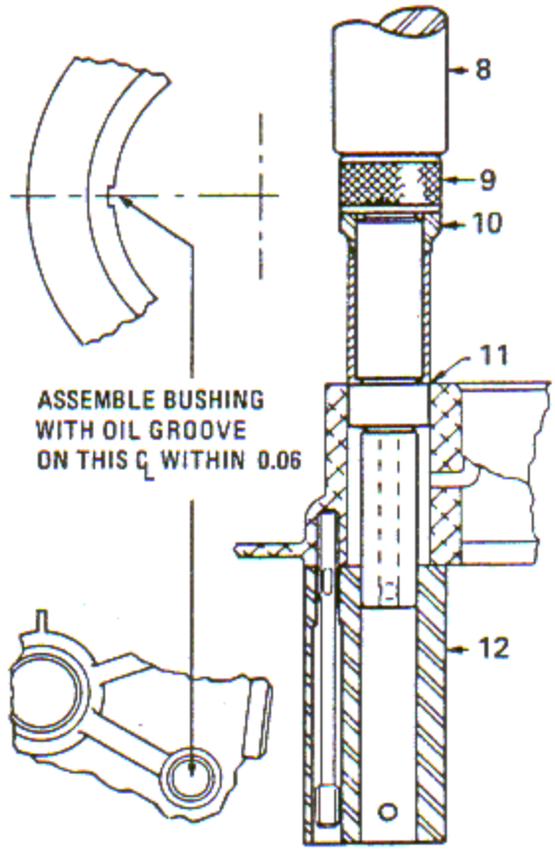

INSTALLATION

Figure 6-229. Removal, Installation and Finish Bore Bushing at Pad F

b. Immerse in dry ice and alcohol or dry ice and gasoline for twenty minutes.

c. Heat cover in oven or hot oil bath at 135°C (275° F) for 30 minutes.

d. Mount the cover on the base (12, figure 6-229) of plug (11) and base as shown with the long stud locating in the small holes of the base.

e. Line up the plug (11) and bushing with the base (12) so that the slot on the plug pilot engages the pinion on the base.

f. Press in the bushing until plug (11) contacts base (12). Care is to be exercised so that the axial oil groove in the bushing ID is positioned on the horizontal centerline within 0.060 inch toward the center of the cover as shown. Maintain pressure until bushing is tight in cover.

6-738. Finish Bore Bushing at Pad F.

a. Plug oil passage with beeswax or paraffin.

b. Clamp cover to drill press or horizontal boring mill table with parallels under front face of flange.

c. Set tool bit (1, figure 6-229) in boring bar (3), checking with micrometer to obtain diameter R, which is 1.2175 - 1.2185 inches. Assemble in adapter (7). Clamp the adapter to cover using engine washers, nuts and suitable spacers as required.

d. Finish bore bushing using collet (5), a magic chuck (4) and coolant consisting of one part soluble oil and 12 to 24 parts of water.

e. Check with gage (6). Break all sharp corners.

6-739. Tap Drill Thrust Button at G. (See tool group 54.)

NOTE

This operation is to be omitted if thrust button is already tapped.

a. Plug oil passages with beeswax or paraffin.

b. Clamp cover supported on parallels to side of radial drill press table. Insert collar (2, figure 6-270) in hole above thrust button. Place an 11/16 inch diameter drill (1) in drill press spindle and align with hole in collar. Spot drill thrust button.

c. Remove collar (2) and replace drill (1) with a 13/64 inch diameter drill. Drill through thrust button until drill breaks through being careful not to drill into cover. Leave cover in clamped position for further operations.

6-740. Tap Fuel Pump Thrust Button at G.

a. With the cover clamped to the drill press table as in the last operation, tap the drilled hole in the thrust button, using tap (3).

NOTE

This operation is to be omitted if thrust button is already tapped.

6-741. Remove Thrust Button at G.

a. With the cover clamped to the drill press table as in the last operation, insert the screw (4, figure 6-230) of screw and nut (5) into tapped hole in thrust button and assemble collar (2) and nut.

b. Remove thrust button using standard wrenches.

6-742. Remove Bushing at Pad H. (See tool group 51.)

a. Clamp cover to drill press or horizontal boring mill table with parallels under front face of flange.

b. Set tool bit (1, figure 6-231) in boring bar (3). Use micrometer to obtain diameter S which is 1.345 - 1.355 inches. Assemble in adapter (2).

c. Clamp the adapter (2) to the cover using engine washers and nuts.

d. Bore out the first cut using collet (5), a magic chuck (4) and a coolant consisting of one part soluble oil and 12 to 24 parts of water.

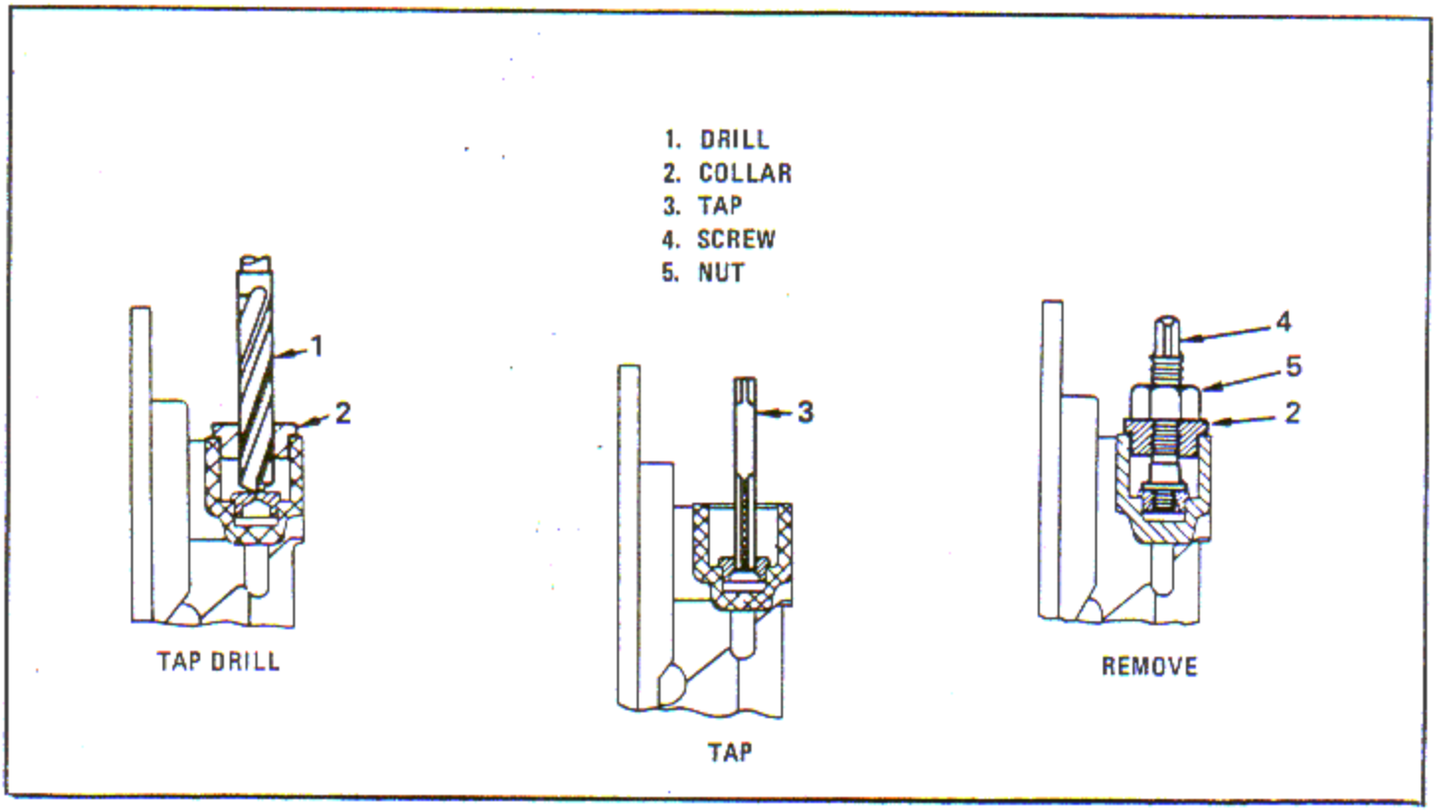

Figure 6-230. Tap Drill, Tap and Remove Thrust Button at Pad G

e. Reset tool bit (1) to obtain diameter S which is 1.417 inches maximum and bore out the second cut. Remove remaining shell.

f. If the hole in the cover is too large to provide a 0.001 - 0.003 inch shrink fit, or if the hole is excessively scored, rebore for oversize bushing.

Bushing	Bore
0.010 inch OD	1.4465 - 1.4475 inch
0.020 inch OD	1.4565 - 1.4575 inch

g. Start from front side of cover, boring as close to the adapter pilot as possible so that the remaining part of bore is left intact. This operation may be done using the same tools and by resetting the tool bit. Check with the proper gage.

6-743. Install Bushing at Pad H.

a. Place bushing on plug (9, figure 6-231) of the plug and nut (8) and clamp tightly using nut as shown.

b. Immerse in dry ice and alcohol or dry ice and gasoline for 20 minutes.

c. Heat the cover in an oven or oil bath at 135°C (275°F) for 30 minutes.

d. Place the cover supported on the collar of plug and collar (10) on an arbor press table as shown.

e. Press in bushing until the flange contacts the cover. Maintain pressure until bushing is tight in cover.

f. Check with 0.001 inch feeler gage between bushing flange and cover to ensure that bushing is properly seated.

6-744. Finish Bore Bushing at Pad H.

a. Plug oil passages with beeswax or paraffin.

b. Clamp the cover to a drill press or horizontal boring mill table with parallels under the front face of the flange.

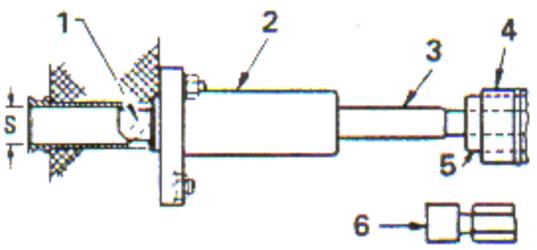

REMOVAL

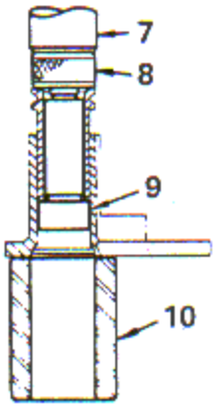

INSTALLATION

1. TOOL BIT
2. ADAPTER
3. BORING BAR
4. MAGIC CHUCK
5. COLLET
6. PLUG GAGE
7. ARBOR PRESS RAM
8. NUT
9. PLUG
10. PLUG AND COLLAR
11. ROUGHING CUTTER

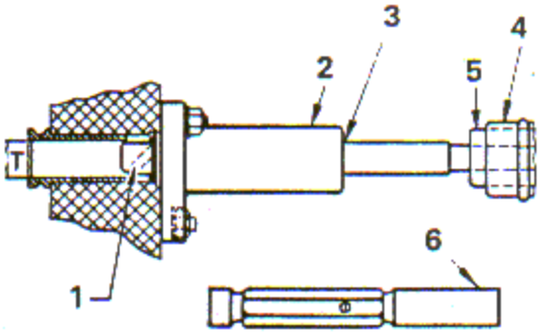

FINISH BORE

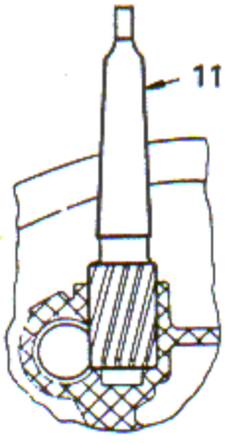

QUARTER CUT

Figure 6-231. Remove, Install, Finish Bore and Quarter Cut Bushing at Pad H

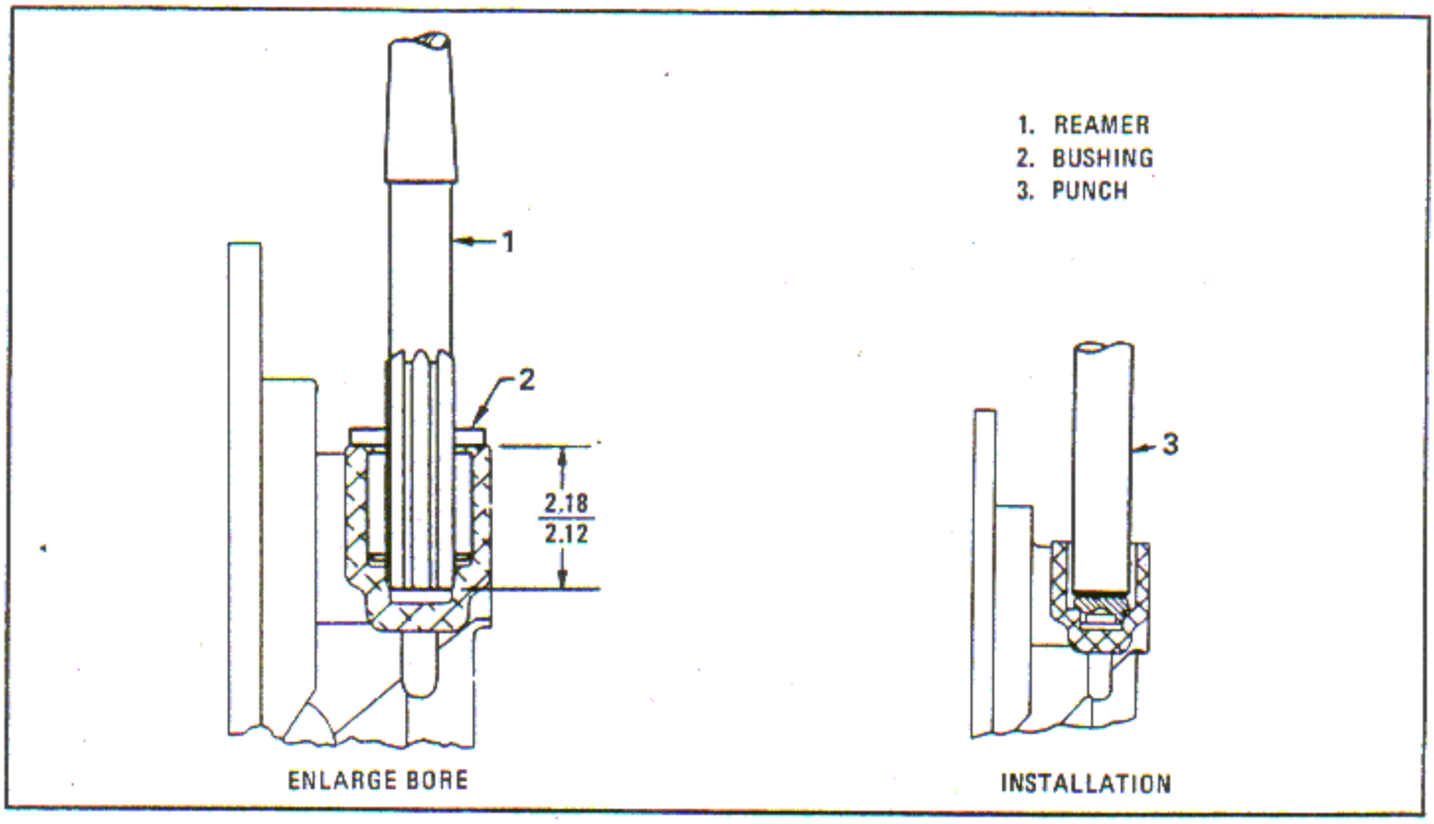

Figure 6-232. Enlarge Bore and Install Thrust Button at Pad G

c. Set tool bit (1, figure 6-231) in boring bar (3). Use micrometer to obtain diameter T which is 1.2176 - 1.2185 inches and assemble in adapter (2). Clamp the adapter to pad H using engine washers and nuts.

d. Finish bore bushing using collet (5) and a magic chuck (4) and coolant consisting of one part soluble oil and 12 to 24 parts of water.

e. Check with gage (6) for diameter 1.2175 - 1.2185 inches.

6-745. Quarter Cut Bushing at Pad H.

a. Clamp the cover, supported on parallels, to the side of a radial drill press table.

b. Insert roughing cutter (11, figure 6-231) in spindle and quarter cut bushing to bottom of counterbore. Do not remove any metal from cover.

c. Replace roughing cutter (11) with finishing cutter and quarter cut bushing to the same depth.

d. Break all sharp corners. Leave cover clamped in position for next operation.

6-746. Enlarge Bore for Thrust Button at G. (See tool group 54.)

NOTE

Omit this operation if thrust button bores are not scored or out-of-round.

a. With the rear cover in a clamped position from the previous operation, plug all passages with beeswax or paraffin.

b. Insert bushing in the hole above thrust button bore.

c. Place reamer (1, figure 6-232) in the drill press spindle and align with hole in bushing. Ream to depth shown.

6-747. Install Thrust Button at G.

a. With cover clamped to radial drill press table as in previous operation, drive in a new thrust button using punch (3, figure 6-232) and a hammer as shown.

b. Dewax by heating cover to 100°C (212°F) for 20 minutes and blow out with kerosene heated to 49°C (120°F) maximum with approximately 20 pounds pressure.

6-748. Remove Bushing at Pad I. (See tool group 76.)

a. Plug oil passages with beeswax and paraffin. Clamp the cover to drill press or horizontal boring mill table with parallels under front face of flange.

b. Set tool bit A (6, figure 6-233) in boring bar (4) using a micrometer to obtain diameter U which is 1.345 - 1.355 inches and assemble in adapter (1).

c. Clamp the adapter (1) to the cover using engine washers and nuts.

d. Bore out the first cut using collet (3) and a magic chuck (2) and coolant consisting of one part soluble oil and 12 to 24 parts of water.

e. Reset tool bit (6) to obtain diameter U which is 1.417 inches maximum and bore out second cut. Remove remaining shell.

f. If hole in cover is too large to provide a 0.0015 - 0.0035 inch shrink fit or if hole is excessively scored, rebore for oversize bushings and check the proper plug gage (5). Refer to the following list.

Bushing	Bore
0.010 inch OD	1.4465 - 1.4475 inch
0.020 inch OD	1.4565 - 1.4575 inch

g. This operation may be done by using the same tools as in the previous operation and resetting the tool bit.

6-749. Install New Bushing at Pad I.

a. Place bushing on plug of the plug and nut (8, figure 6-233) as shown and clamp tightly using proper nut (7).

b. Immerse in dry ice and alcohol or dry ice and gasoline for 20 minutes.

c. Heat the cover in an oven or oil bath at 135° C (275° F) for 30 minutes.

d. Place cover on arbor press table supported on plug and collar (9) as shown.

e. Press in bushing until bushing flange contacts cover.

f. Check with a 0.001 inch feeler gage between the bushing flange and the cover to ensure that the bushing is properly seated.

6-750. Finish Face and Countersink Bushing at I.

a. Plug oil passages with beeswax or paraffin.

b. Attach holder (10, figure 6-233) with cutter (11) and the pilot of pilot and nut (13) to the drill press spindle.

c. Place cover supported on parallels on table and align with pilot. Clamp the cover to the table.

d. Finish face the bushing flange to dimension X which is 2.728 - 2.732 inches. Check with a vernier depth gage.

e. Replace the cutter (11) with countersink cutter using same pilot and chamfer flange to diameter Y which is 1.34 - 1.36 inches and the angle Z which is 45 degrees.

6-751. Finish Bore Bushing at Pad I.

a. Clamp the cover to a drill press or horizontal boring mill table with parallels under front face of flange.

b. Set tool bit A (6, figure 6-233) in boring bar (4) using micrometer to obtain diameter AA which is 1.2175 - 1.2185 inches and assemble in adapter (1).

c. Clamp the adapter (1) to the cover using engine washers and nuts.

d. Bore out the first cut using collet (3) and a magic chuck (2) and a coolant consisting of one part soluble oil and 12 to 24 parts of water.

e. Check with gage (5). Break all sharp corners.

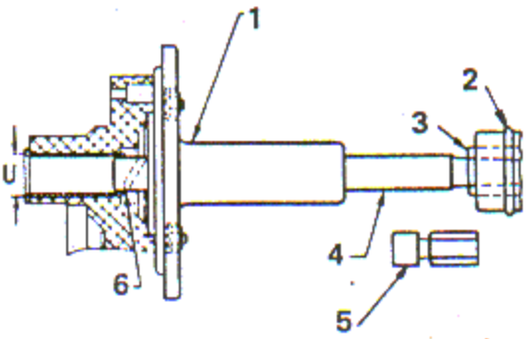

REMOVAL

1. ADAPTER
2. MAGIC CHUCK
3. COLLET
4. BORING BAR
5. GAGE
6. TOOL BIT
7. NUT
8. PLUG AND SPACER
9. PLUG AND COLLAR
10. HOLDER
11. CUTTER
12. COUNTERSINK
13. PILOT AND NUT

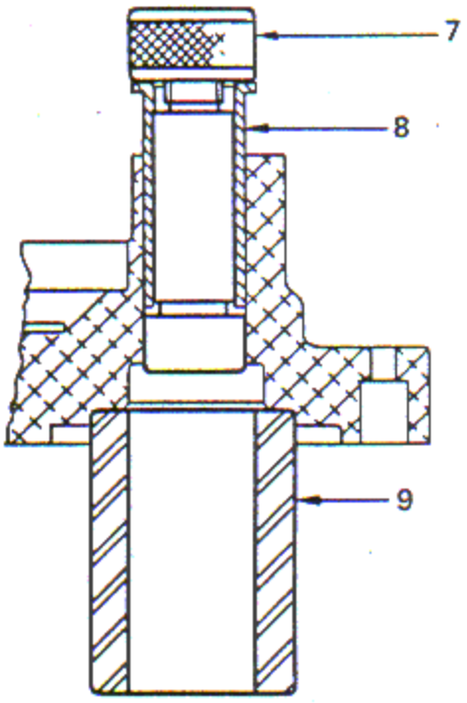

INSTALLATION

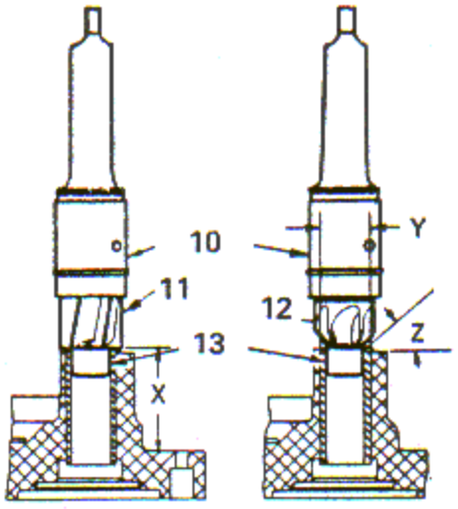

FINISH FACING AND COUNTERSINK

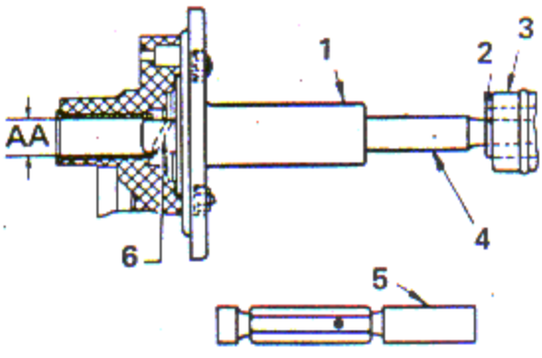

FINISH BORE

Figure 6-233. Removal, Installation, Finish Facing and Countersink and Finish Bore at Pad I

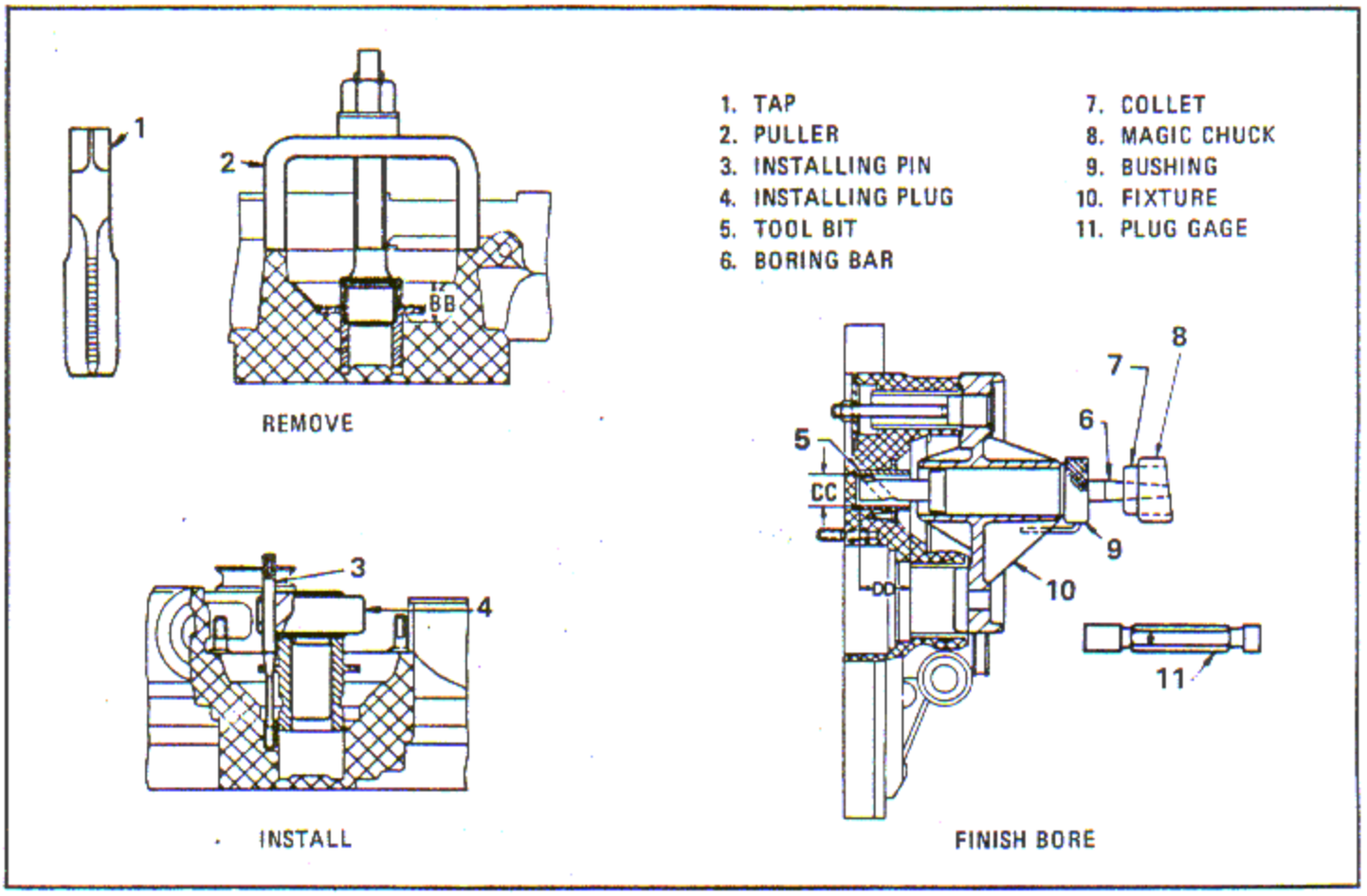

Figure 6-234. Remove, Install and Finish Bore Bushing at Pad J

f. Dewax by heating to 100°C (212°F) for 20 minutes and blow out with kerosene heated to 49° C (120°F) maximum with approximately 20 pounds pressure.

6-752. Remove Bushing at Pad J. (See tool group 76.)

NOTE

This operation is not applicable to R1820-80 and -80B engine models.

a. Plug oil passages with beeswax or paraffin.

b. Using tap (1, figure 6-234), tap bushing to a depth BB which is 1.00 - 1.25 inches. Remove three engine screws from bushing flange.

c. Place the cover in an oven or oil bath heated to 149°C (300°F) for 30 minutes.

d. Assemble puller (2) to bushing as shown and remove bushing using standard wrenches.

e. If the hole in cover is too large to provide a 0.001 - 0.003 inch shrink fit or if hole is excessively scored, rebore for oversize bushings and check with plug gage (11). See the following list.

Bushing	Bore
0.010 inch OD	1.385 - 1.386 inch
0.020 inch OD	1.395 - 1.396 inch
0.030 inch OD	1.405 - 1.406 inch

f. Bore as deep as possible without removing metal from the lug at bottom of the bore. This operation may be done by using the same tools as in the previous operation and resetting the tool bit.

6-753. Install New Bushing at Pad J.

NOTE

This operation is not applicable to R1820-80 Series engine models.

a. Place the bushing on the plug (4, figure 6-234) of the installing tool and immerse in dry ice and alcohol or dry ice and gasoline for 20 minutes.

b. Heat the cover in an oven or oil bath to 135° C (275° F) for 30 minutes. Place cover on arbor press table.

c. Align holes in bushing flange with tapped holes in cover using an installing pin (3), as shown.

d. Press in bushing until flange contacts cover. Maintain pressure until bushing is tight in cover.

e. Assemble screws in bushing flange. Screws must be flush or below flush.

f. Stake metal into slots with a suitable punch. Remove burrs.

6-754. Finish Bore Bushing at Pad J.

NOTE

This operation is not applicable to R1820-80 Series engine models.

a. Plug oil passages with beeswax or paraffin.

b. Clamp fixture (10, figure 6-234) securely to cover as shown. Clamp cover to drill press or horizontal boring mill table with parallels under rear face of flange.

c. Insert bushing (9) in the fixture (10), as shown.

d. Set tool bit B (5) in boring bar B (6). Check with micrometer to obtain diameter CC, which is 0.9685 - 0.9695 inches.

e. Bore bushing to depth DD, which is 1.78 inches minimum, using collet (7), a magic chuck (8) and a coolant consisting of one part soluble oil and 12 to 24 parts of water.

f. Check with gage G (11). Break all sharp corners.

g. Dewax by heating to 100° C (212° F). Blow out with kerosene heated to 49° C (120° F) maximum with approximately 20 pounds pressure.

6-755. SUPERCHARGER REAR COVER, REWORK OF LEFT OR RIGHT MAGNETO PADS.

6-755A. Repair supercharger rear covers as follows:

a. When supercharger rear covers are found excessively worn in the area of the left or right magneto pad pilot diameter, the defective area is to be repaired by installing a bushing as shown in figure 6-235.

b. When supercharger rear covers are found excessively worn at the parting surface of the left or right magneto pads, rework the surface as shown in figure 6-235, removing only the minimum amount of material as necessary to correct the condition.

c. Supercharger rear covers which cannot be repaired in accordance with the above requirements are unfit for further survice.

6-756. SUPERCHARGER REAR HOUSING COVER, REWORK OF WORN GENERATOR PADS.

6-756A. Supercharger rear housing covers exhibiting excessive wear in the areas of the generator pad and/or mounting boss, shall be reworked as follows:

a. Fabricate a steel shim as shown in figure 6-236.

b. Manufacture a steel cover from 0.50 inch thick plate, 6.07 - 6.09 inches in diameter. Drill six equally spaced holes (± 1 degree) with a 15/32 inch drill on a 4.990 - 5.010 inch diameter on the plate.

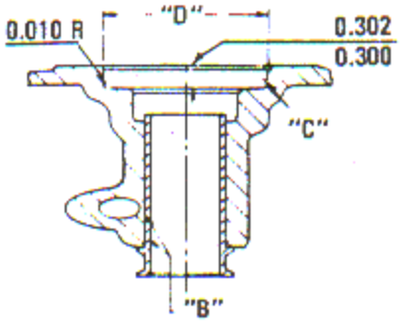

REWORK
SECTION "A-A"

NOTES:
1. "C" SURFACE MUST BE CONCENTRIC TO EITHER "B" DIA. WITHIN 0.002
2. "D" DIMENSION TO BE ADJUSTED TO OBTAIN 0.002 TO 0.003 TIGHT FIT WITH BUSHING SELECTED FOR INSTALLATION.

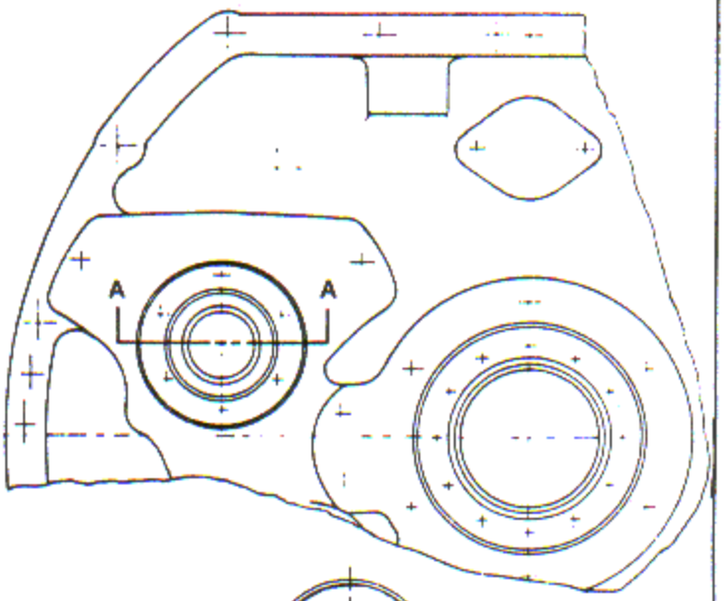

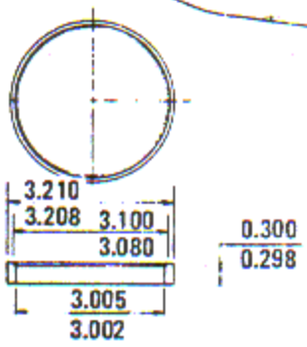

BUSHING
MATERIAL: MIL-S-7720

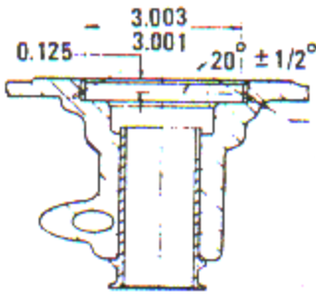

DRILL 0.090 - 0.088, 0.300 - 0.250 DEEP
AND PRESS FIT - 2 PINS (2 PLACES)
PEEN EDGES LIGHTLY TO LOCK PINS.

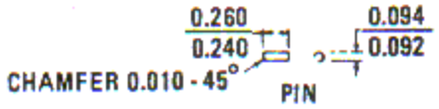

PIN
MATERIAL: MIL-R-19631

NOTE: REWORK OF LEFT MAGNETO PAD SHOWN
REWORK OF RIGHT MAGNETO PAD IDENTICAL
AS REQUIRED.

Figure 6-235. Installing Bushings and Reworking Supercharger Rear Cover Magneto Pads (Sheet 1 of 2)

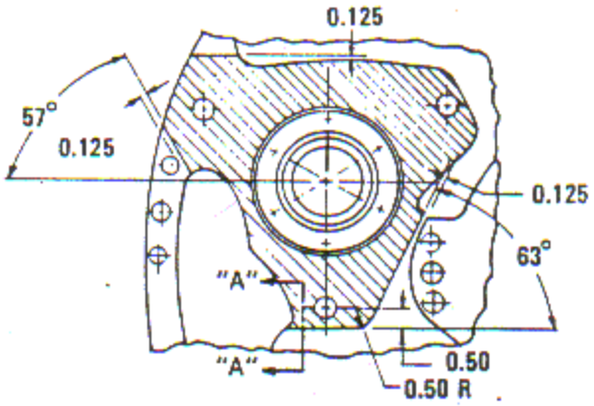

REWORK
LEFT MAGNETO PAD
NO SCALE

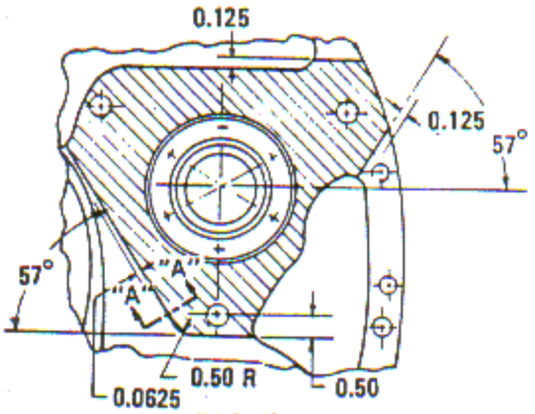

REWORK
RIGHT MAGNETO PAD
NO SCALE

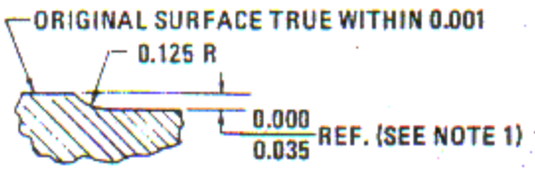

SECTION "A" - "A"
TYPICAL RIGHT & LEFT MAGNETO PADS

NOTES:
1. MACHINE SHADED AREA $\frac{0.000}{0.035}$ DEEP, REMOVE MATERIAL ONLY AS REQUIRED TO OBTAIN A TRUE SURFACE.
2. CHROME PICKLE TREAT REWORKED SURFACES IN ACCORDANCE WITH PARAGRAPH 6-773.
3. ALL DIMENSIONS ±0.010 & DEGREES ±1/2 UNLESS OTHERWISE SPECIFIED.

Figure 6-235. Installing Bushings and Reworking Supercharger Rear Cover Magneto Pads (Sheet 2 of 2)

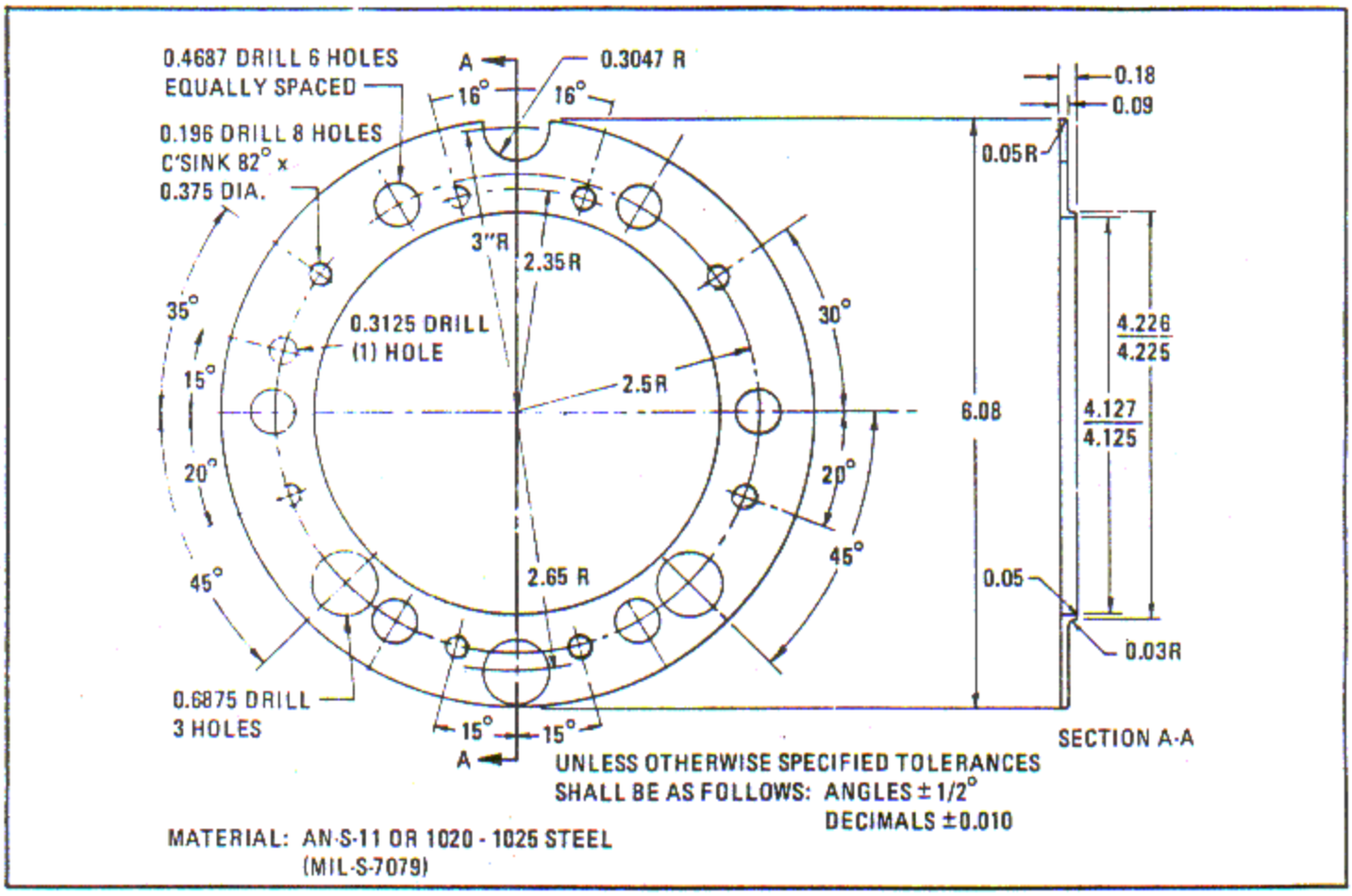

Figure 6-236. Manufacturing Steel Shims for Generator Pad

NOTE

The steel cover plate will be retained for future use upon completion of the worn generator pad rework.

c. Remove the six generator mounting studs from the supercharger rear cover and rework the worn mounting pad as shown in figure 6-237.

d. Reinstall the generator mounting studs, using the proper torque.

e. Apply a thin coating of rubber cement, MIL-A-5092A, Type III, or equivalent, to the mating surfaces of the shim and the generator mounting pad. Press the shim onto the pad. Ensure the shim seats properly on the pad without interference from the edge of its flange, i.e., the edge of the flange should clear or barely touch the rear cover. Using staking screws, AN510-10-8, apply the initial pressure. Torque the screws to 23 - 27 inch-pounds.

f. Install the stud cover plate on the mounting pad with the generator mounting nuts and washers. Torque to 55 - 60 inch-pounds.

g. Remove excess compound squeezed out from the seams. Allow four hours for the sealing compound to set and then remove the plate. Re-torque staking screws to 23 - 27 inch-pounds.

h. Measure the inside diameter of the boss and machine to 4.125 - 4.127 inches diameter as necessary.

6-757. SUPERCHARGER REAR COVER MACHINING AND STUDDING ASSEMBLY, REPAIR OF.

6-757A. Supercharger rear cover machining and studding assembly, that is excessively worn in the impeller drive gear support or supercharger clutch counterbore, may be repaired in accordance with figure 6-238. After installation of the collar into the supercharger clutch counterbore and temperature has stabilized, check the circularity of the collar. It must be circular within 0.001 inch.

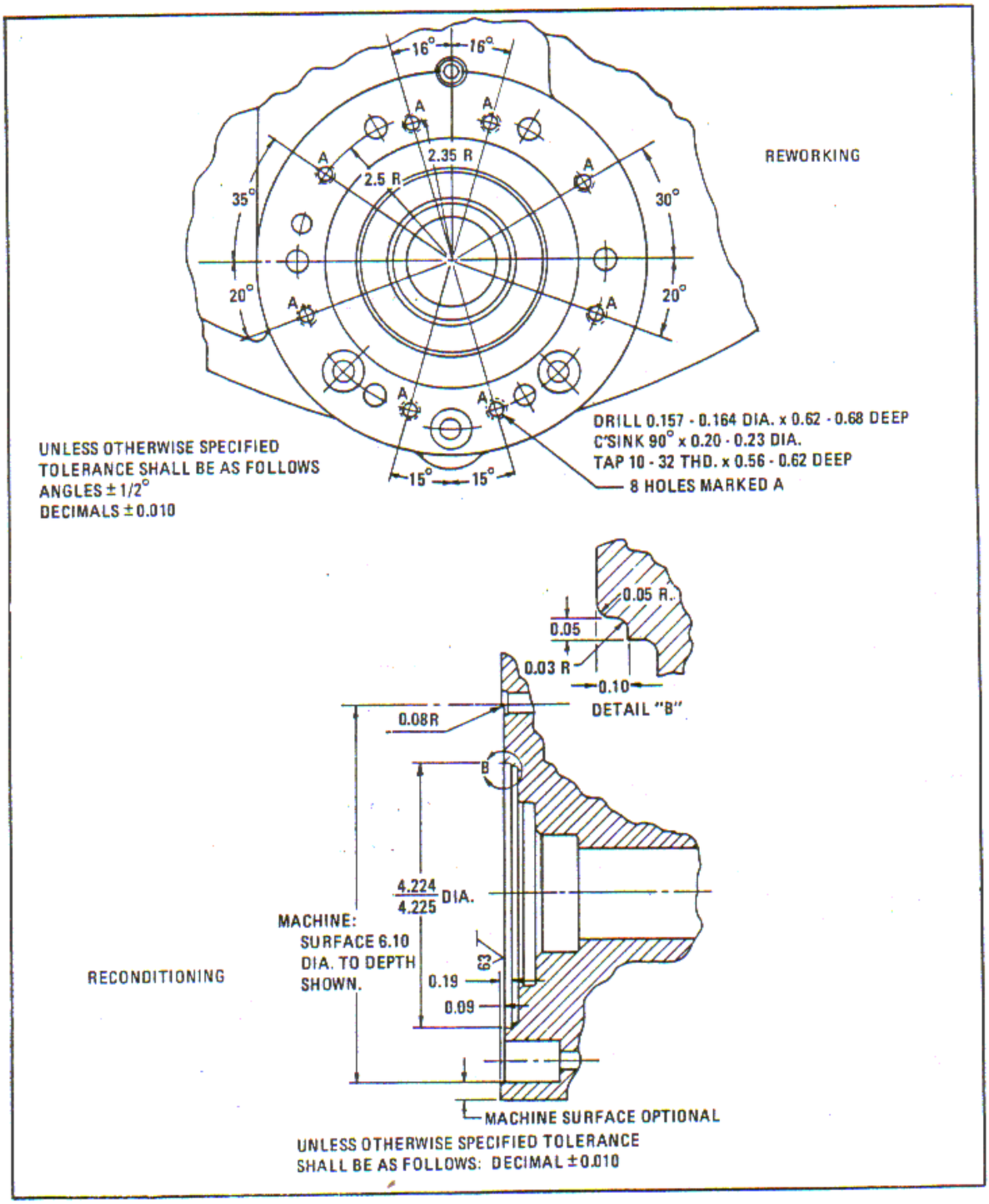

Figure 6-237. Reworking and Reconditioning Worn Generator Mounting Pads

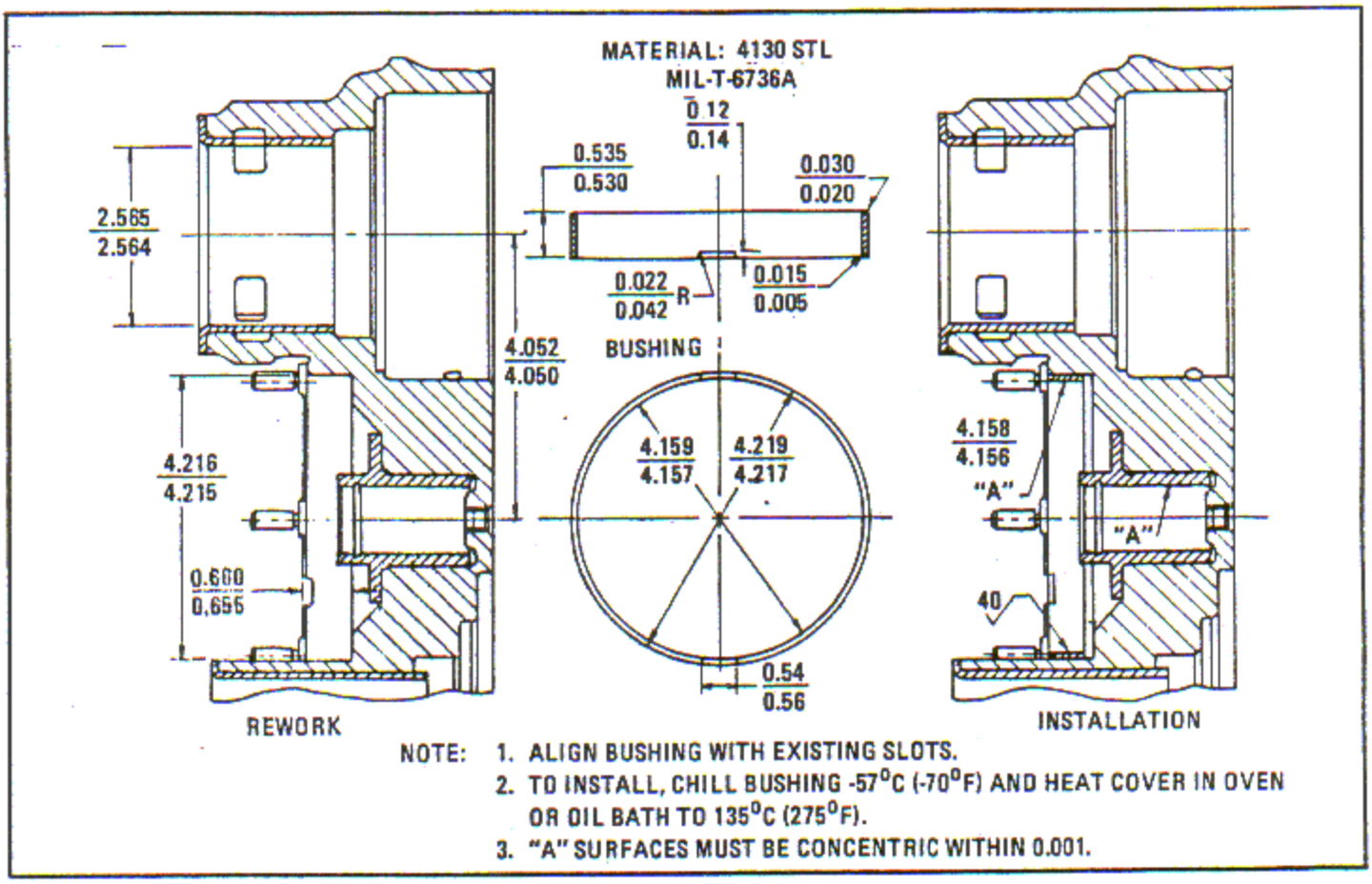

Figure 6-238. Installation and Rework of Bushing for Impeller Drive Gear Support or Supercharger Clutch Counterbore

6-758. CLUTCH OIL CONTROL VALVE SLEEVE BORE. Supercharger rear covers in which the valve sleeve recess is out of limits shall be reconditioned by plugging oil passages with beeswax or paraffin and boring the recess diameter to either 1.0092 - 1.0100, or 1.0192 - 1.0200 inches, as necessary to clean up. Do not disturb the original bottom of the hole. The bore shall be circular, straight and parallel within 0.0005 inch and the surface finish shall be 32 microinches rms or better. Break all sharp edges, dewax and clean all oil passages.

6-759. TACHOMETER DRIVE SHAFT GEAR SMALL BUSHINGS REPLACEMENT.

6-760. Remove Old Bushings from Housing and Cover. (See tool group 137.)

a. Tap the bushing using tap. Remove the bushing using puller (1, figure 6-239).

6-761. Bore Undercut at Anti-Flange End of Bushing Hole in Housing.

NOTE

Omit this operation if bushing holes in housing are provided with an undercut as shown.

a. Clamp housing lightly to lathe faceplate (4, figure 6-239), indicating one bushing hole to run true within 0.001 inch full indicator reading, then clamp tightly.

b. Bore undercut to dimensions shown and repeat this operation on the remaining bushing holes.

c. Break all sharp corners.

d. All dimensions shown in this and in following operations are given in inches.

6-762. Ream Bushing Holes in Housing and Cover to Oversize. (See tool group 138.)

a. Clamp housing (2, figure 6-239) to jig (6) against face stamped "housing" using jig nuts (5).

b. Place proper size reamer in drill press spindle and line up with jig (6). Clamp jig to drill press table and ream bushing hole, being careful not to remove any metal from bottom of blind holes. Use proper coolant as outlined in paragraph 6-197.

c. Set gage (7) with proper setting gage and check the bore. Repeat this operation on the remaining bushing holes if required.

d. Remove housing (2) from jig (6) and break all sharp corners.

e. Turn jig (6) over and clamp cover to jig face stamped "cover" using jig nuts (5), washers and screws (9). Place proper size reamer in drill press spindle and line up with jig. Clamp jig to drill press table and machine bushing hole as outlined in steps b through d.

f. Clean cover and housing thoroughly.

6-763. Install New Bushings in Housing and Cover. (See tool group 137.)

a. Place housing (2) or cover (3) in oven heated to 149°C (300°F) for 30 minutes. Cool bushings using standard shop procedures. Press in bushing using plug, as shown, maintaining pressure until bushing flanges contacts housing or cover.

b. Check with a 0.0015 inch feeler gage between bushing flanges and housing or cover to determine that bushings are properly seated.

6-764. Burnish Bore of Bushings.

a. Place housing or cover on drill press table and roughing broach (11) in a chuck, aligning broach with hole to be burnished. Clamp housing or cover to drill press table and pass broach through bushing and out again.

b. Repeat this operation using finishing broach. Broaching is to be done dry and broach is not to be rotated.

c. Check with gage for proper size and check with feeler gage under flanges to determine if broaching operation has lifted bushings from their seats.

6-765. DUAL ACCESSORY DRIVE HOUSING MACHINING ASSEMBLIES REPAIR.

6-765A. Engine dual accessory drive housing machining assemblies, found damaged in the hydraulic or tachometer pad oil seal counterbore areas, may be repaired as shown in figure 6-240.

6-766. DUAL ACCESSORY DRIVE HOUSING AND COVER BUSHINGS REPLACEMENT. (See tool group 39.)

6-766A. The following combinations of components may exist when replacing bushings.

a. Existing cover and existing housing assemblies.

b. Existing cover assembly and new housing bushing and studding assembly.

c. Existing housing assembly and new cover bushing and studding assembly.

d. New housing bushing and studding assembly and new cover bushing and studding assembly.

e. Follow instructions as may be applicable in the operations outlined.

f. Opposing bushings in existing housing or cover assemblies must be replaced, otherwise they cannot be successfully line-reamed or line-bored.

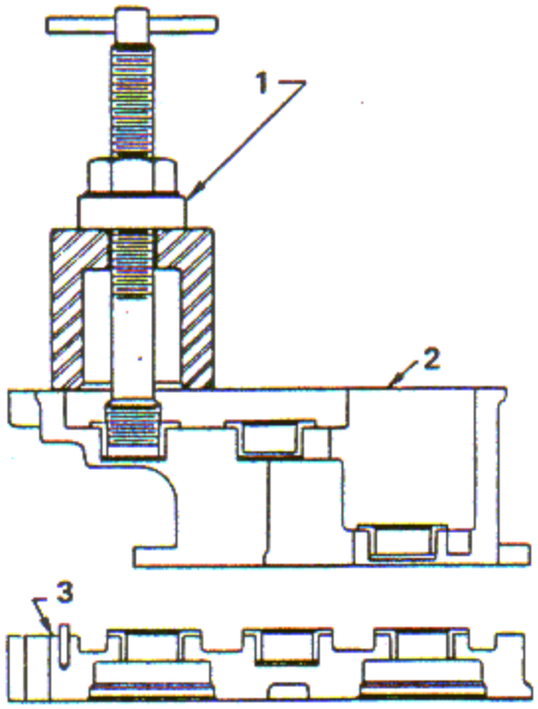

REMOVING BUSHINGS

1. PULLER
2. HOUSING
3. COVER
4. LATHE FACEPLATE
5. JIG NUT
6. JIG
7. RING GAGE
8. HOLE GAGE
9. JIG WASHER AND SCREW
10. INSTALLING PLUG
11. BROACH

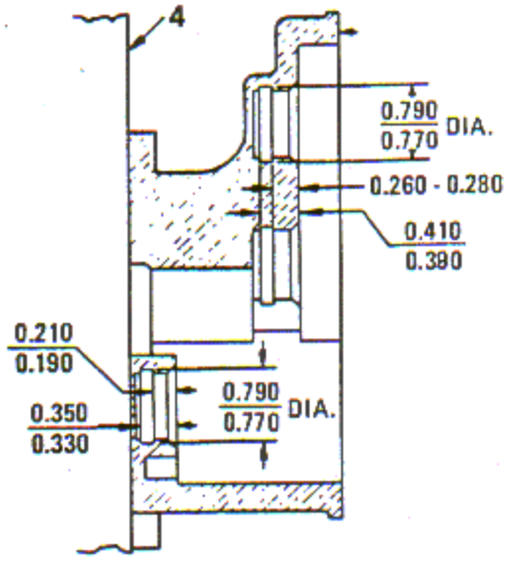

BORING UNDERCUT

Figure 6-239. Tachometer Drive Shaft Gear Small Bushing Replacement (Sheet 1 of 2)

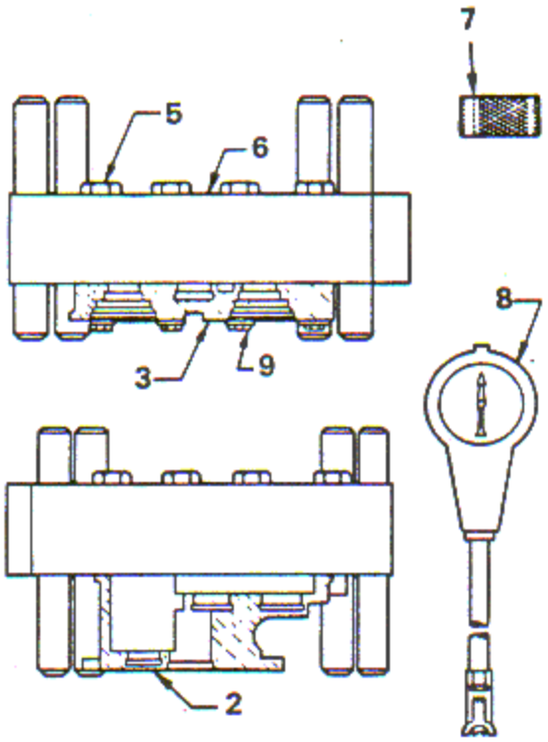

REAMING HOLES

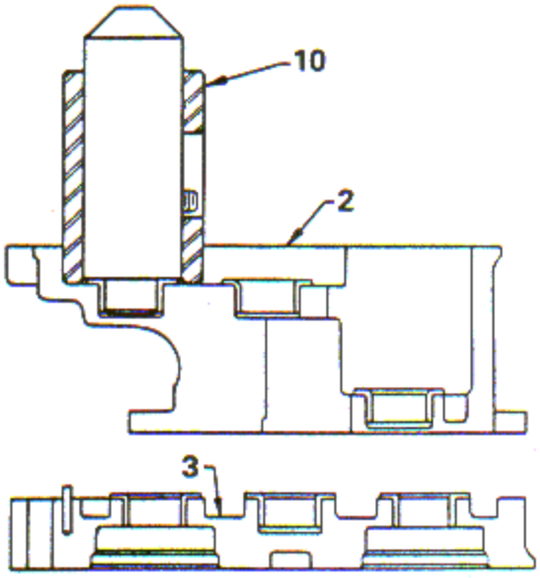

INSTALLING NEW BUSHINGS

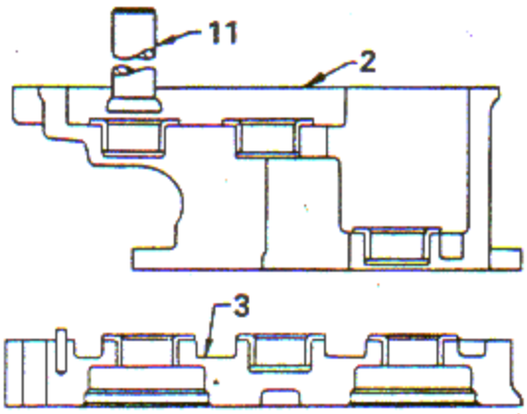

BURNISHING BORES

Figure 6-239. Tachometer Drive Shaft Gear Small Bushing Replacement (Sheet 2 of 2)

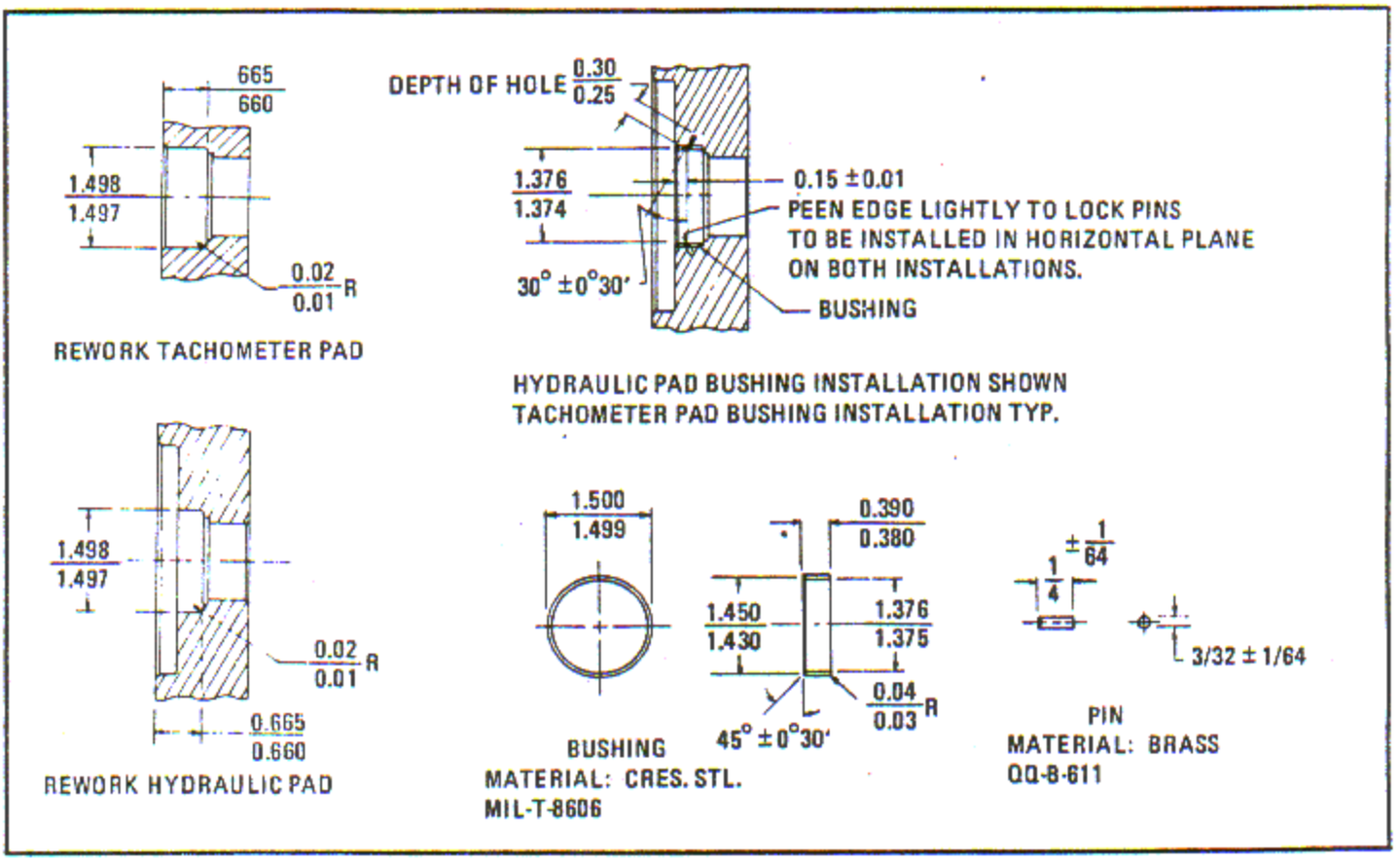

Figure 6-240. Reworking Hydraulic and Tachometer Pads on Engine Dual Accessory Drain Housing

6-767. Remove Bushings in Existing Housing and Existing Cover.

a. Remove bushings A, B, D, G and H using proper plugs A, B, C and D (5, figure 6-241) and collars A and/or B (4).

b. Remove bushings C, E and F using proper puller A and/or B.

c. Select proper plugs, collars and pullers from the following list.

Plugs		Bushings
A	for	A
B	for	B
C	for	D
D	for	G and H

Collars		Bushings
A	for	A
B	for	B, D, G and H

Pullers		Bushings
A	for	F
B	for	C and E

6-768. Bore Bushing Holes in Existing Housing and Existing Cover for Oversize Bushings.

a. Plug all passages and channels in the housing and cover with beeswax, Federal Specification C-B-191, or paraffin, Federal Specification VV-W-95.

b. Bolt adapter (6, figure 6-241) to the lathe faceplate. Indicate plug M (8) in the adapter to run true within 0.0006 inch full indicator reading and surface I to run true within 0.001 inch full indicator reading.

c. Fasten the lower fixture screw (12) of fixture into the housing with engine nut and washer K. Place cover (2) on housing. Attach housing and cover to fixture bottom plate with engine nuts O, locating on the fixture plug (8) and fixture ring (15). Assemble top plate (13) to housing locating with fixture guide pins (14) and fasten with engine nut J, fixture stud (11), washers and nuts and upper fixture screw. Fasten fixture bottom plate to adapter plate (6), locating adapter plate plug M in bushing N of bottom plate.

NOTE

Select the proper gage, A through O, for bushings A through H, from the list following step i.

d. Bore bushing holes A and E to the proper oversized and check with proper gages.

e. Bore bushing holes B and F to proper oversizes by shifting the fixture so that holes to be bored line up with plug M. Check with the proper gages.

f. Reverse fixture (7, figure 6-241) on adapter plate (6), locating adapter plug (5) in bushing L of the top plate. Remove the fixture plug (8).

g. Bore bushing holes C and G to the proper oversize and check with the proper gages.

h. Bore bushings D and H to the proper oversize by shifting the fixture so that the holes to be bored line up with plug M.

i. Select the applicable standard or oversize gage from the following list.

Gage Size	In Diameter	Bushing
A, Standard	1.2475 - 1.2485 in.	A
B, 0.005 in. OS	1.2525 - 1.2535 in.	A
C, 0.010 in. OS	1.2575 - 1.2585 in.	A
D, 0.015 in. OS	1.2625 - 1.2635 in.	A
E, 0.030 in. OS	1.2775 - 1.2785 in.	A
F, Standard	1.123 - 1.124 in.	B, F, G, H
G, 0.005 in. OS	1.128 - 1.129 in.	B, F, G, H
H, 0.010 in. OS	1.133 - 1.134 in.	B, F, G, H
I, 0.015 in. OS	1.138 - 1.139 in.	B, F, G, H
J, 0.030 in. OS	1.153 - 1.154 in.	B, F, G, H
K, Standard	0.9355 - 0.9365 in.	C, D, E
L, 0.005 in. OS	0.9405 - 0.9415 in.	C, D, E
M, 0.010 in. OS	0.9455 - 0.9465 in.	C, D, E
N, 0.015 in. OS	0.9505 - 0.9515 in.	C, D, E
O, 0.030 in. OS	0.9655 - 0.9665 in.	C, D, E

6-769. Install Bushings in Existing Housing and Existing Cover.

a. Press in bushings A, B, C, D, G and H using proper plugs, A through D, and collars, A and/or B. See figure 6-241.

b. Press in bushings E and F using proper plugs B and/or C. Support cover on parallels places close to or under the boss using heavy paper or cardboard to protect the cover.

c. The following list indicates the proper plugs and collars to be used.

Plug	Bushing	Collar	Bushing
A	A	A	A
B	B and F	B	B, C, D, G and H
C	C, D and E		
D	G and H		

6-770. Finish Face Flanges of Bushings B, C, D, E, F, G and H.

a. Plug all bushing holes in housing and cover with beeswax or paraffin.

b. Clamp housing or cover (2, figure 6-241) on lathe faceplate indicating flange face of bushing to be faced to run true within 0.002 inch full indicator reading and its bore to run true within approximately 1/32 inch full indicator reading.

c. Face bushings F, G and H to obtain dimension R which is 0.074 - 0.076 inch.

d. Face bushings B, C and D to obtain dimension Q which is 0.674 - 0.676 inch, and bushing E to obtain dimension Q which is 0.409 - 0.411 inch.

e. Check dimensions with a depth gage.

6-771. Finish Bore all Bushings and Turn Flange Outside Diameter of Bushing A.

a. Bolt adapter to lathe faceplate (9, figure 6-241). Indicate plug M in adapter to run true within 0.0006 inch full indicator reading and surface I to run true within 0.001 inch full indicator reading.

b. Fasten lower fixture screw (12) of fixture (7) into the housing with engine nut and washer K. Place cover (2) on housing. Attach the housing and cover to fixture bottom plate with engine nuts O, locating on fixture plug (8) and fixture ring (15). Assemble top plate (3) to housing, locating with fixture guide pins (14) and fasten with engine nut J, fixture stud (11), washers and

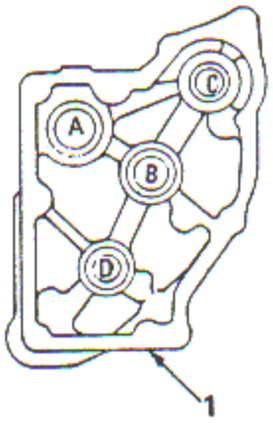

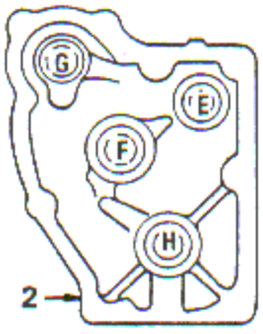

1. DUAL ACCESSORY DRIVE HOUSING
2. COVER
3. PULLER
4. COLLAR
5. PLUG
6. ADAPTER PLATE
7. FIXTURE
8. FIXTURE PLUG
9. FIXTURE NUT
10. FIXTURE WASHER
11. FIXTURE STUD
12. FIXTURE SCREW
13. FIXTURE TOP PLATE
14. FIXTURE GUIDING PINS
15. FIXTURE RING
16. PLUG GAGE
17. SNAP GAGE
18. DRILL
19. STOP COLLAR
20. JIG
21. JIG BUSHINGS

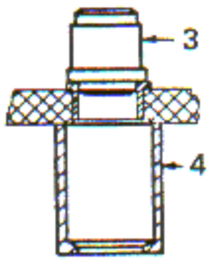

INSTALLING BUSHING

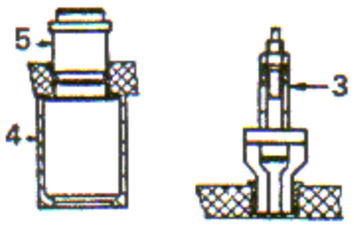

REMOVING BUSHINGS

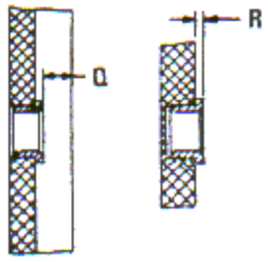

FINISH FACE FLANGES OF BUSHINGS B, C, D, E, F, G AND H

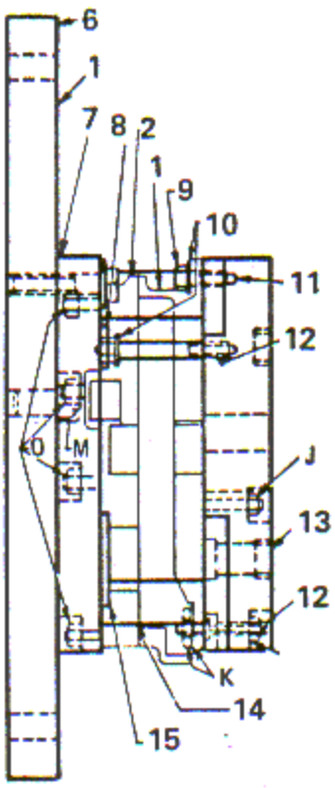

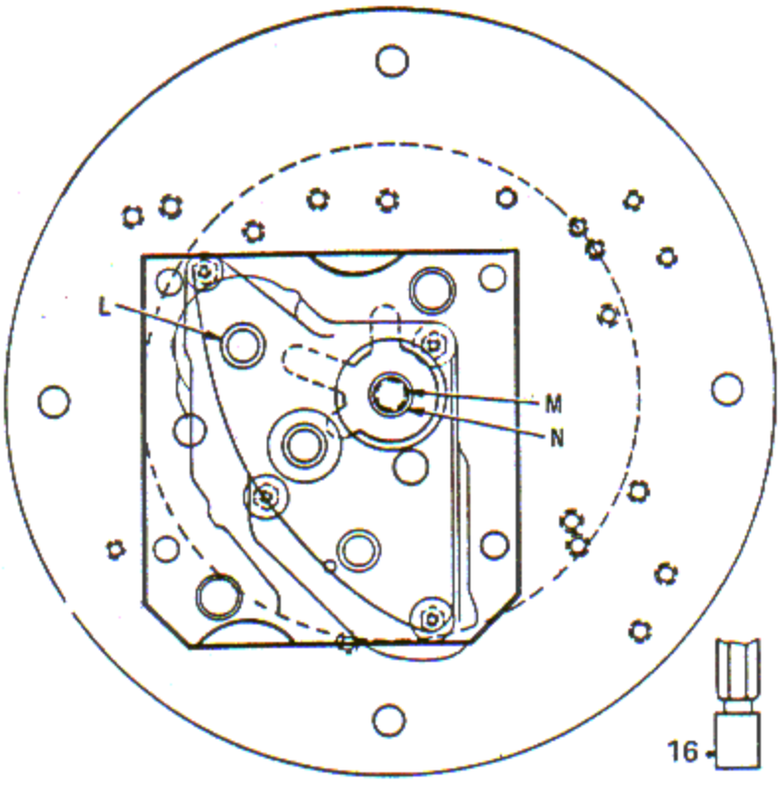

BORING BUSHING HOLES FOR OVERSIZE BUSHINGS

Figure 6-241. Dual Accessory Drive Housing and Cover Bushings Replacement (Sheet 1 of 2)

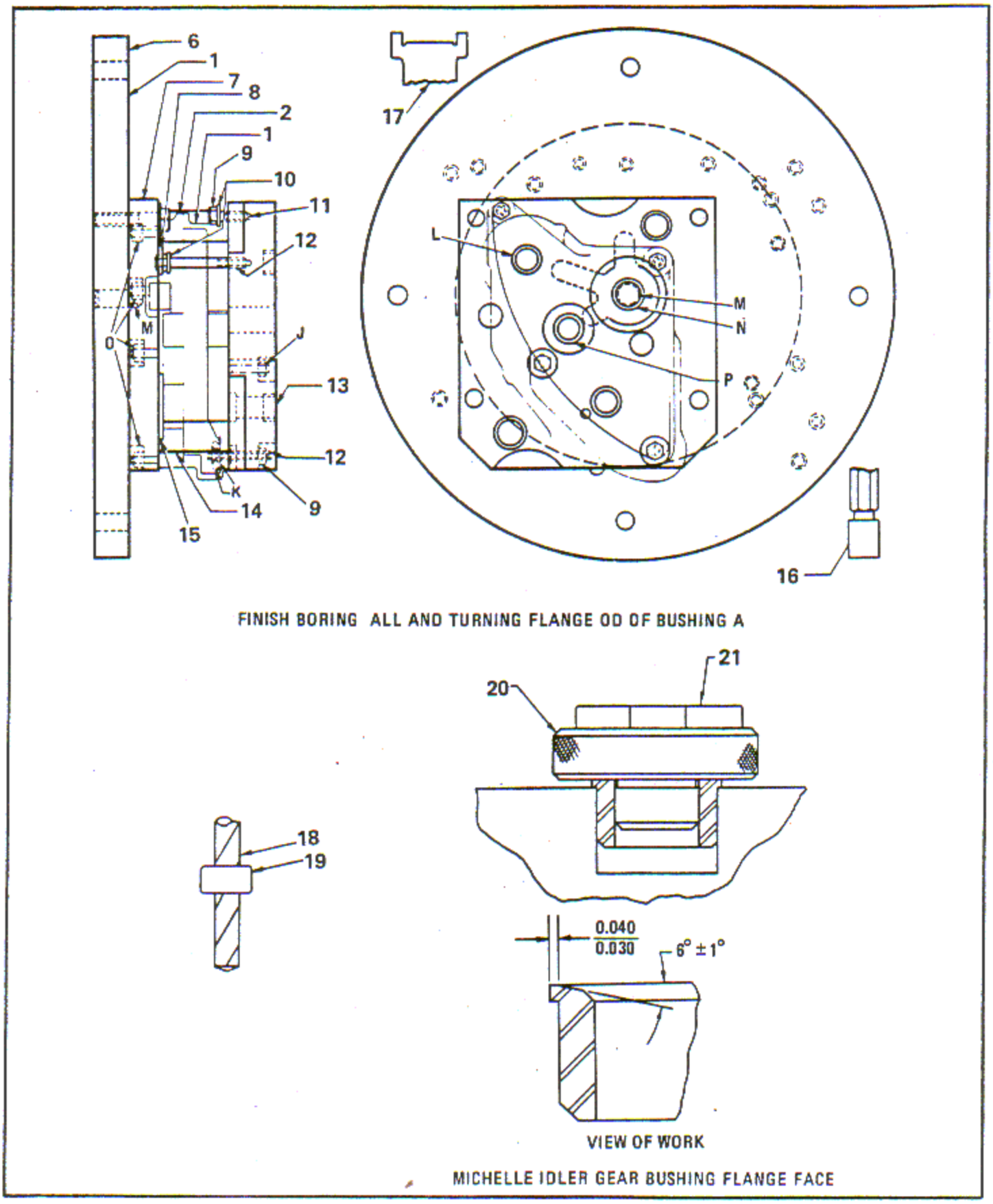

Figure 6-241. Dual Accessory Drive Housing and Cover Bushings Replacement (Sheet 2 of 2)

nuts, and upper fixture screw (12, figure 6-241). Fasten fixture bottom plate to adapter plate (6), locating adapter plate plug M in bushing N of bottom plate.

NOTE

The proper finish gage, P through S, for bushings A through H may be selected from the list following step g.

c. Finish bore bushings A and E and check with proper gages. Turn flange outside diameter of bushing A to 1.779 - 1.781 inches and check with gage T.

d. Finish bore bushings B and F by shifting fixture so that bushing P in bottom plate and holes to be bored line up with plug M and check with proper gage.

e. Reverse fixture (7) on adapter plate (6), locating adapter plug in bushing L of top plate. Remove fixture plug. Finish bore bushings C and G and check with proper gage.

f. Finish bore bushings D and H by shifting fixture so that holes to be bored line up with plug M. Check with proper gage.

g. Select the proper gage from the following list.

Gage	Bushings
P	A (1.000 - 1.001 inches hole diameter)
Q	B and F (0.8745 - 0.8755 inch hole diameter)
R	C, D and E (0.687 - 0.688 inch hole diameter)
S	G and H (0.937 - 0.938 inch hole diameter)

6-772. Michelle Idler Gear Bushing Flange Face.

a. Locate jig (20, figure 6-241) in bushings B and F as shown.

b. Place dual accessory drive housing or cover (2) on parallels or blocks on a suitable drill press. Insert a standard 1/4 inch drill (Cleveland Twist Drill Company, Cleveland, Ohio) or equivalent, in spindle and align with guide bushing in jig. Alter drill point to 5- 7 degrees prior to starting operation. Clamp housing or cover to drill press table.

c. Secure a suitable stop collar (19) to the drill (18) and michelle to dimension as shown. Stone or polish the edges to blend into the flat surface.

d. Align spindle and bushing and michelle remaining three locations as previously done in steps a through c.

e. Dewax by heating housing and cover to 135° C (275° F).

f. Blow out with kerosene, Federal Specification VV-K-211, heated to 49°C (120° F) maximum, with approximately 20 pounds pressure.

6-773. REAR OIL PUMP MATING SURFACE REPAIR.

NOTE

Not applicable to the increased capacity pump (PPC-65).

a. Machine the forward mating surface up to a minimum height of 10.250 inches, measured from the scavenge pump mounting pad.

b. Machine the left rear and right rear mating surfaces up to a minimum height of 8.600 inches, measured from the scavenge pump mounting pad.

c. Spotface the chip detector plug boss up to a maximum of 0.030 inch.

CAUTION

A minimum of four full threads engagement with the drain plug must be provided.

d. Spotface the attaching stud boss areas in pump legs up to a maximum of 0.031 inch (1/32 inch). Minimum section through the reworked boss shall be 0.725 inch.

e. Maintain parallelism of all machined areas within 0.002 inch and surface finish of 80 microinches rms.

f. Treat all reworked surfaces for corrosion prevention using standard procedure.

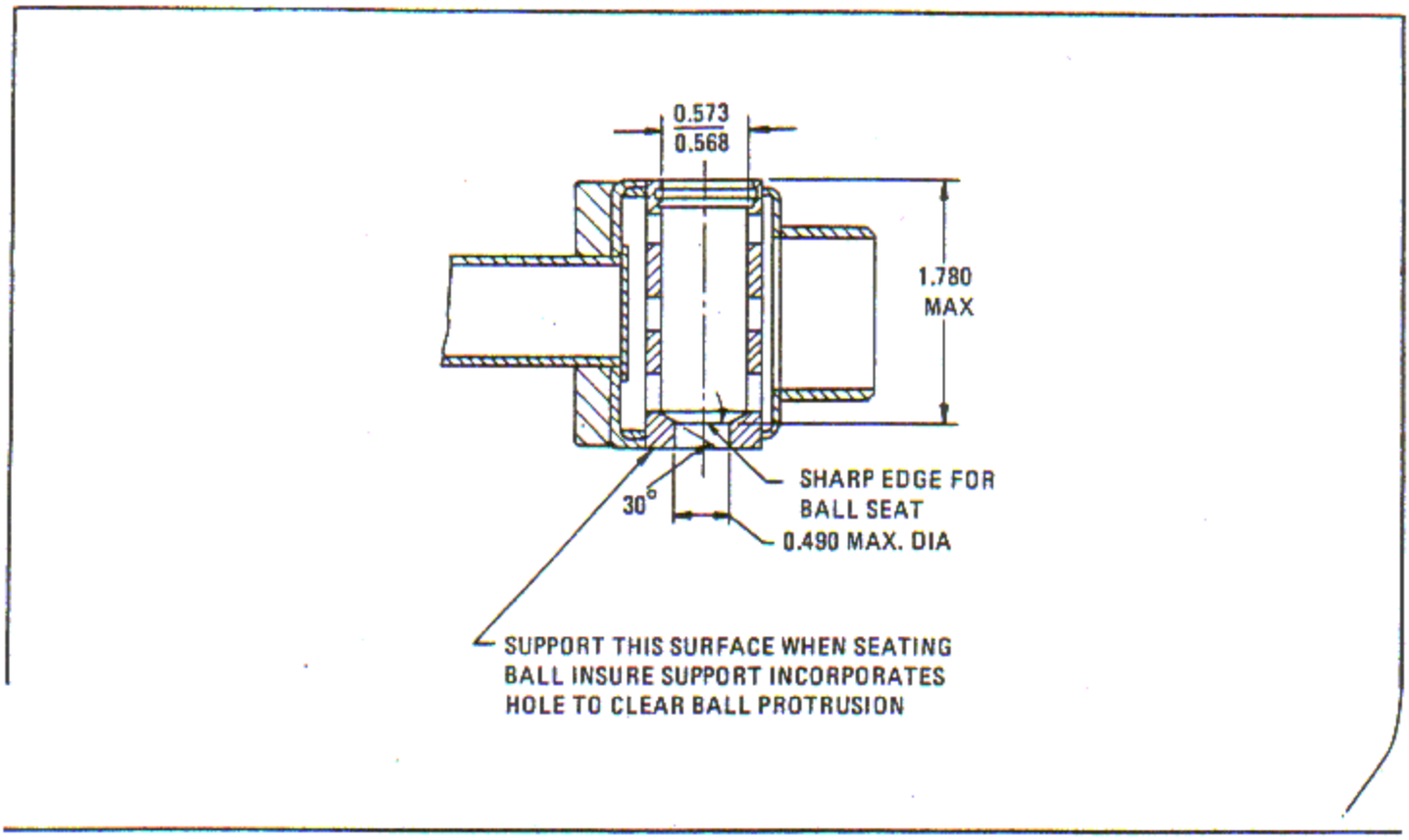

Figure 6-242. Oil Strainer By-Pass Valve Reconditioning

6-774. OIL STRAINER BY-PASS VALVE.

6-774A. Leakage problems due to distortion of the valve body may be repaired as follows.

a. Install the valve body in a suitable fixture and using a subland combination reamer with a 120 degree included angle countersink, rework the valve in accordance with figure 6-242. The diameter of the countersink should be 0.568 inch cylindrically ground with no back-off relief.

b. Pressure test the reworked valve as instructed in paragraph 6-188.

6-775. OIL STRAINER HOUSINGS, REPAIR OF.

6-775A. Oil strainer housings damaged on the outboard end by the oil strainer cover puller screw, are to be repaired in accordance with the following instructions:

a. Remove the end cap from the two piece housing by heating the end of the housing to melt the silver solder and push the cap out.

b. For a one piece housing, mount the housing in a lathe and cut the cap end from the housing to the dimensions in figure 6-243.

c. Manufacture an end cap to the dimensions in figure 6-243.

d. Silver braze the new end cap in the housing as shown. Note that the dowel pin hole is located 130 degrees from the centerline of the outlet hole in the side of the housing.

e. Silver braze the dowel pin into the 0.250 inch diameter hole in the end cap.

f. Vapor blast the housing and apply black oxide coating (Class I) per MIL-C-13924B.

g. Apply a coating of dry film lubricant MIL-L-23398 on the silver brazed area.

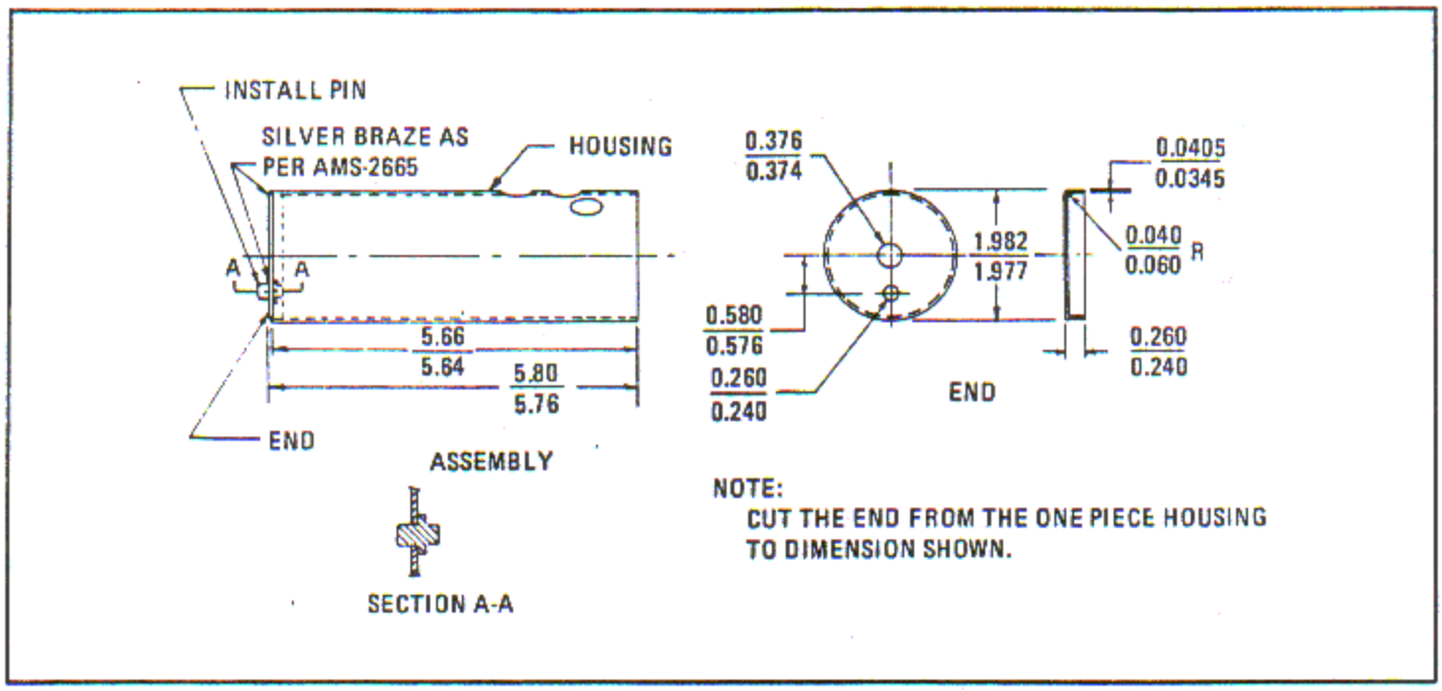

Figure 6-243. Reworking Oil Strainer Housings

6-776. OIL STRAINER COVER LUGS. Oil strainer cover broken lockwire lugs need not be restored. If broken, remove the remnants of the lug and smooth out any toughness or sharp edges.

6-777. MAGNETIC CHIP DETECTOR PLUG RECONDITIONING.

6-777A. Chip detectors found to be shorted, when inspected as outlined in paragraph 6-189, can be reconditioned as follows:

a. Remove the self locking nut and pin. Disassemble the plug.

CAUTION

Exercise care to prevent damage to the pin when removing the nut. Ensure that the ring magnet does not come in contact with any magnetic or ferrous material.

b. Thoroughly clean all parts using trichlorethylene cleaning solvent, Military Specification MIL-T-7003 and dry the parts with an air blast.

c. Inspect the phenolic washers. Replace any that are cracked or broken.

NOTE

Replacement washers may be locally fabricated as shown in figure 6-244.

d. Assemble the plug following the sequence shown in figure 6-244.

CAUTION

Replace the O-ring, exercising care to seat it properly.

e. Test the plug to ensure that it is not shorted as instructed in paragraph 6-189.

6-778. RECONDITIONING WORN ENGINE PARTS BY PLATING.

6-779. GENERAL PROCEDURE FOR CHROME PLATING.

a. The engine parts shown in figures 6-245 through 6-263 and 6-270 may be reconditioned by grinding and chrome plating the indicated surfaces. The heavy lines indicate the surfaces to which chrome plating may be applied. The maximum finished thickness of chromium is 0.005 inch unless otherwise specified.

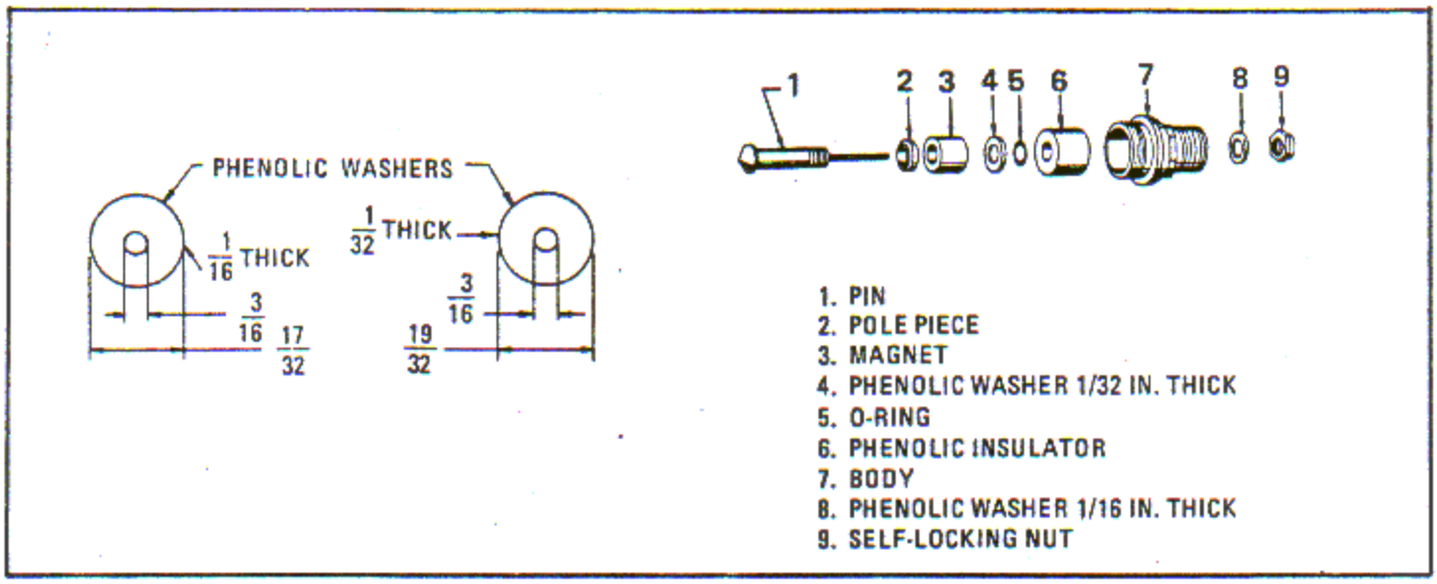

Figure 6-244. Magnetic Chip Detector Plug Reconditioning

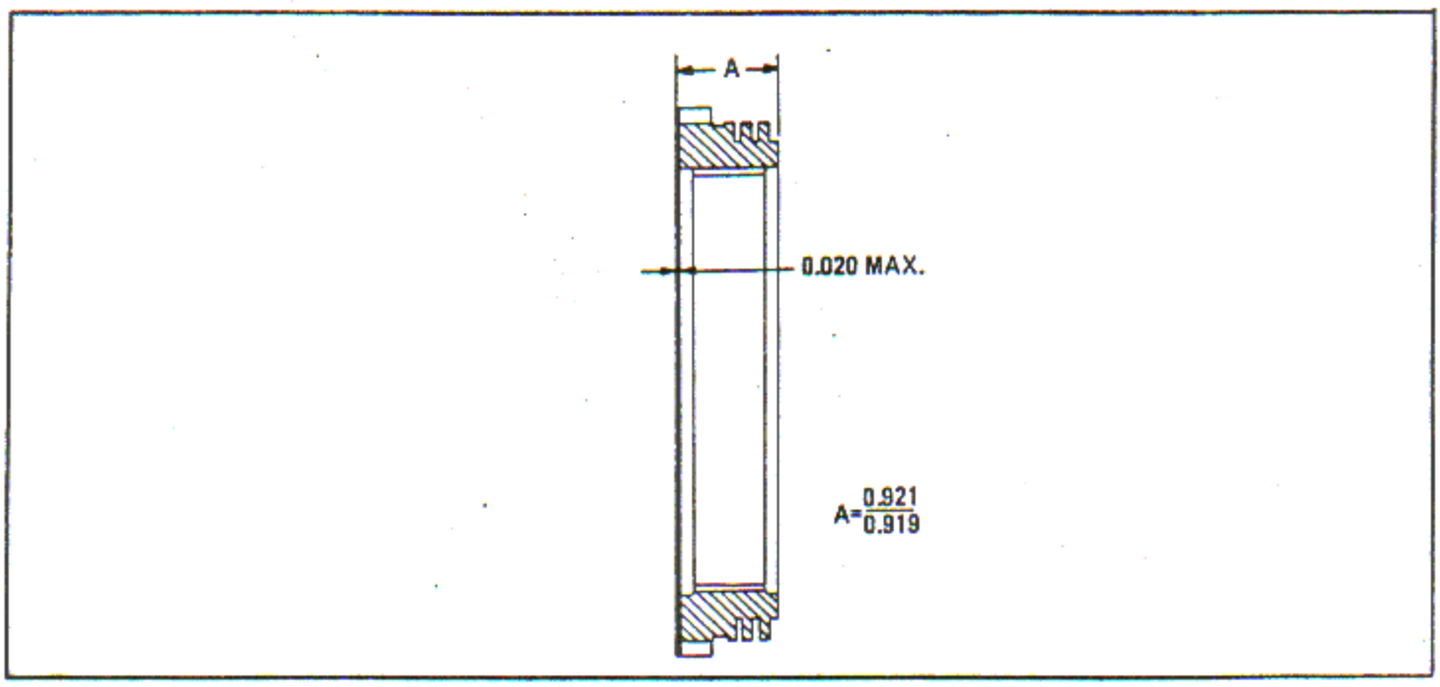

Figure 6-245. Propeller Shaft Thrust Bearing Nut

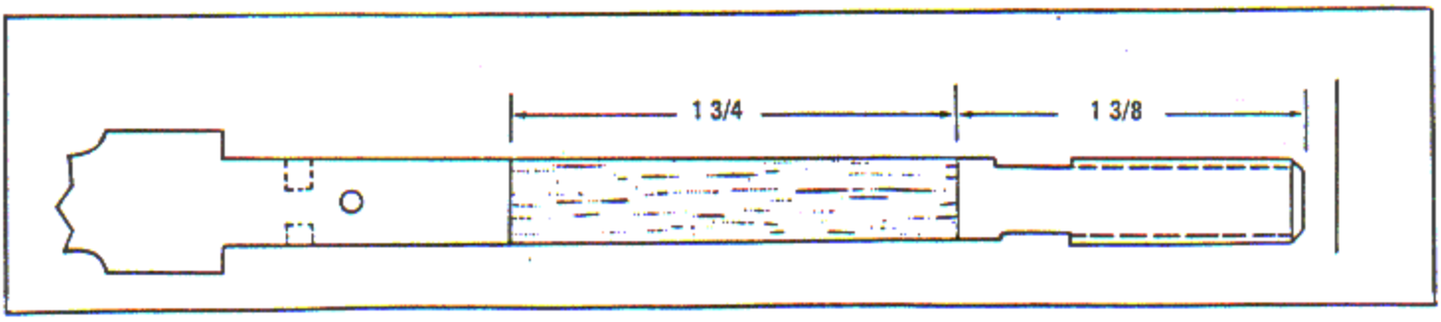

Figure 6-246. Supercharger Clutch Oil Control Valve Rework

NOTE

All parts shall be magnetic particle inspected after grinding before plating. They shall be penetrant inspected again following plating. Indication of burns, cracks or grinding checks are cause for rejection.

6-780. Engine driven accessory drive shafts which are worn by the oil seal shall be reconditioned as follows, unless otherwise stated.

a. Shafts having the diameter worn not more than 0.001 inch below minimum drawing limits shall be polished to restore surface finish.

b. Shafts may be finish ground to clean up to 0.003 inch below minimum drawing diameter without the need for chrome plating.

c. Parts failing to clean up through the above rework may be chrome plated. Refer to this section for specific details. The shaft diameters may be preground to 0.020 inch below maximum drawing limits. Subsequently the shafts may be chrome plated to a sufficient thickness to allow for finish grinding to the original drawing limits. Finished plate thickness shall not exceed 0.010 inch.

d. Surface finish must be 10 microinches rms or better.

6-781. SUPERCHARGER CLUTCH OIL CONTROL VALVE REPAIR (R1820-76 SERIES, -86A, -86B). Valves with bent shafts may be straightened by installing between lathe centers and tapping with a small hard rubber hammer until both valve lands and the shaft section within 2.7 inches of the threaded end are true to each other within 0.002 inch FIR. Valves with lands worn below 0.5610 inch in diameter may be reconditioned by machining to 0.556 - 0.557 inch, chrome plating, and subsequently grinding to 0.5610 - 0.5615 inch. The trueness specified above shall be required after grinding. Magnetically inspect after repair.

6-782. Supercharger clutch oil control valves with surface discrepancies on the stem may be repaired as follows. See figure 6-246.

a. Surface damage which is confined to the unshaded stem area may be polished out to a maximum depth of 0.010 inch. No further rework is necessary.

b. Within the shaded area the surface must be restored to original size following rework.

c. Grind to a diameter of 0.290 - 0.300 inch.

d. Plasma spray Metco 404 or equivalent sufficiently thick to allow for machining to final size. Apply in accordance with current local specifications.

e. Machine diameter to 0.312 - 0.314 inches, 32 microinches rms or better finish. Blend smoothly into adjoining areas.

6-783. PROPELLER SHAFT RECONDITIONING.

6-783A. PROCEDURE. The propeller shaft journal which mates with the propeller shaft thrust bearing spacer shall be checked to run true within 0.002 inch FIR on all surfaces which mate with the lands on the ID of the spacer. Any depression deeper than 0.0005 in less than 45° on the circumference which runs into a spacer mating band, or any radius on the oil holes in the journal which reworking has caused to extend into a mating band, shall require reconditioning of the journal. Propeller shafts that are worn, scored or pitted can be ground and chrome plated back to

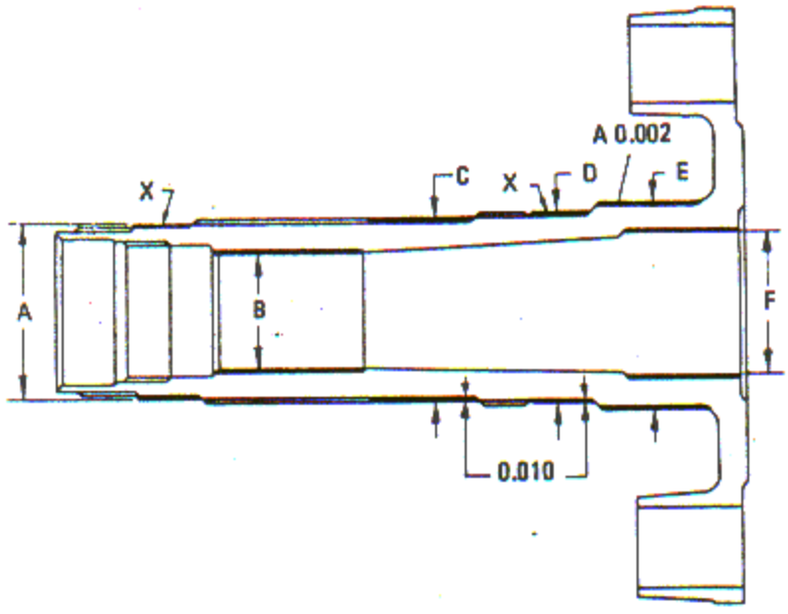

R1820-76 SERIES, -86A, -86B

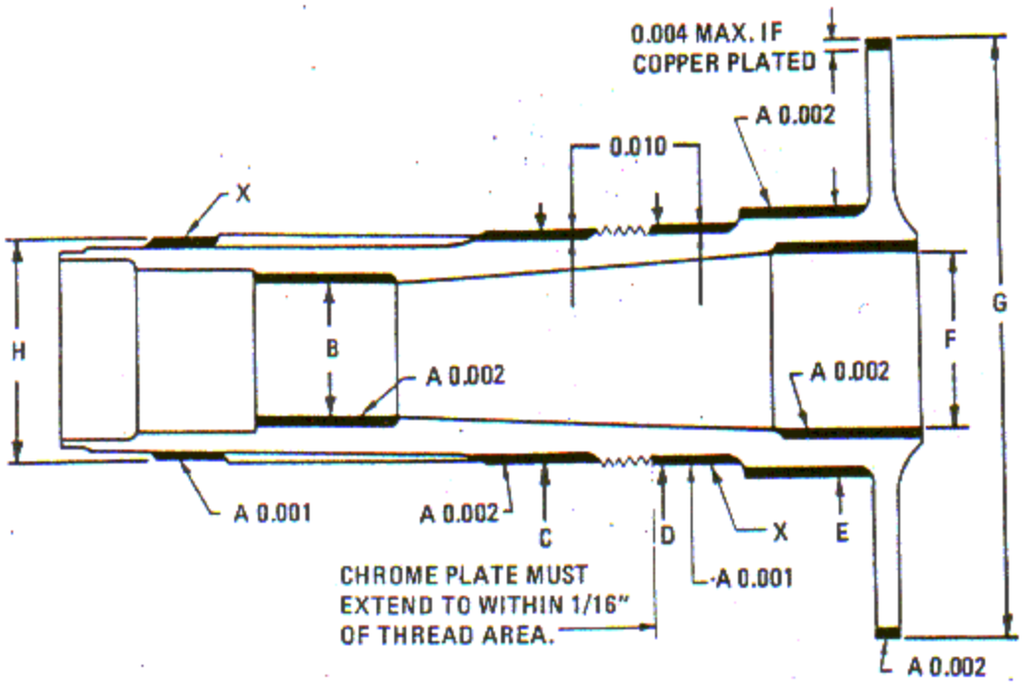

A 3.4980 - 3.5000 OD
B 2.4370 - 2.4380 ID
C 3.8100 - 3.8120 OD
D 3.9355 - 3.9360 OD
E 4.3200 - 4.3205 OD
F 2.9995 - 3.0005 ID
G 10.1865 - 10.1875 OD
H 3.4980 - 3.5000 OD

R1820-80 SERIES

Figure 6-247. Propeller Shaft, Reconditioning by Chrome Plating

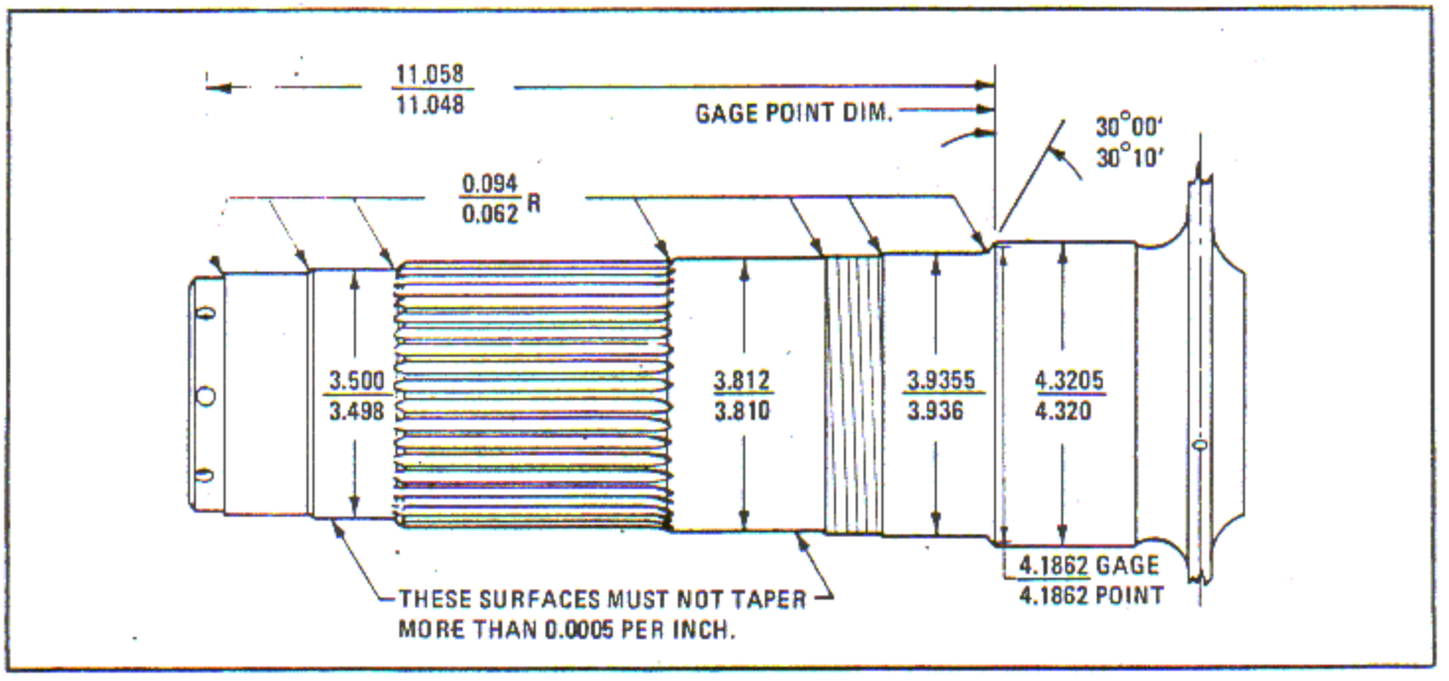

Figure 6-248. Propeller Shaft Machining Dimensions

in the areas indicated. (See figure 6-247.) The maximum finished plate thickness is 0.005 inch unless otherwise specified. The various diameters after plating and final grinding must be within the limits shown. When the shaft is mounted on the X surfaces, the A surfaces must be within full indicator readings specified. The OD of the flange can have a surface finish of 40 microinches rms. On other surfaces obtain a finish of 10 microinches rms or better.

NOTE

Copper plating of the flange OD is permissible, if required. See figure 6-247.

a. Chrome plating to restore dimensions or surface condition shall be accomplished as required on areas shown in figure 6-247.

NOTE

Diameter E may be ground 0.003 inch undersize, if surface requirements are met, the shaft can be used with a 0.003 inch undersize sleeve without any further reconditioning. Shafts that will not clean up on diameter E to utilize a 0.003 inch undersize sleeve, must be reconditioned by chrome plating as shown in figure 6-247.

b. Indicate the shaft to run true within 0.002 inch full indicator reading prior to the grinding operation.

c. Maximum amount of parent material removed from shafts prior to chrome plating shall be 0.020 inch below original drawing OD dimensions. Refer to figure 6-248.

d. Difficulty involved during masking and plating adjacent to spline roots, threaded surfaces or shouldered areas can be prevented by allowing a clearance up to 1/4 inch maximum between the edges of a ground surface and the areas described in the foregoing.

NOTE

Shafts previously plated where no such clearance was provided shall require removal of all existing plating during process.

e. Deposition of chrome plating shall conform with standard procedures.

f. Excercise care during finish grinding to prevent wheel contact with a shouldered or threaded surface. When a fissure between the plating and

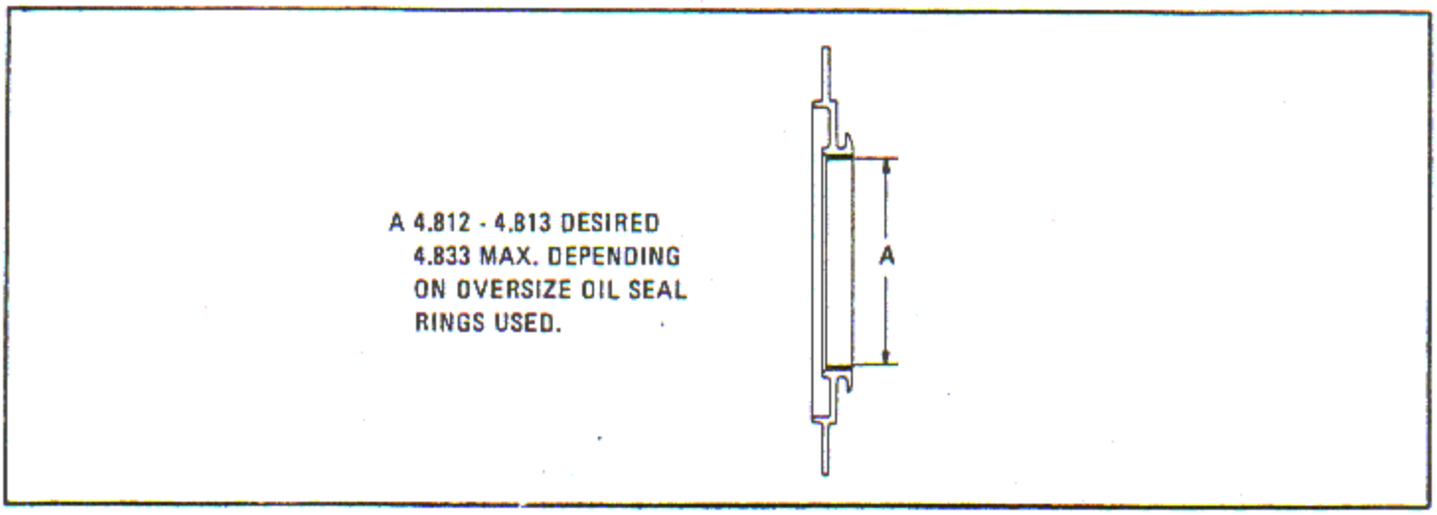

Figure 6-249. Crankcase Front Section Flange

shaft parent material is observed, grind a relief up to 0.010 inch deep and not more than 5/16 inch width to remove same.

g. The surface finish after rework shall be 10 microinches or better and the radius at the affected holes shall be restored at 0.04 inch to 0.08 inch maximum. The presence of defects such as voids, dents, pitting, poor bonding, etc., render shaft unfit for service and shall require the entire process be repeated.

6-783B. CRANKCASE REWORK.

6-784. CRANKCASE FRONT SECTION FLANGE. Recondition the crankcase front section flange by grinding and chrome plating the areas indicated in figure 6-249.

6-785. CRANKCASE FRONT MAIN BEARING RETAINER RING. Recondition crankcase front main bearing retainer rings which are worn or corroded out of tolerance in the oil seal ring contact area by chrome plating as follows. Refer to figure 6-250.

a. Grind the oil seal ring contact area to an appropriate oversize diameter of either 5.692 - 5.693 or 5.697 - 5.698 inches, whichever is necessary to clean up the affected area.

NOTE

Retaining rings cleaned up by this method are ready for use with the appropriate oversize oil seal ring.

b. When the oil seal ring contact area is worn to the extent that grinding to clean up the affected area would exceed the 5.698 inches maximum oversize diameter, it is permissible to grind the affected area to clean up and then chromium plate, see figure 6-250.

NOTE

Do not exceed a maximum oil seal ring contact area diameter of 5.718 inches.

c. Chrome plate sufficiently to permit regrinding to the appropriate oversize listed in step d.

d. Regrind the chrome plated area to the appropriate oversize listed. Maintain a surface finish of eight microinches rms, or better.

Oversize	Diameter
Std.	5.687 - 5.688 inches
0.005	5.692 - 5.693 inches
0.010	5.697 - 5.698 inches

e. Mask off the chromium plated area, and tin plate the remaining surface of the retaining ring to a thickness of 0.0001 inch in accordance with the instructions given in paragraph 6-896.

NOTE

This operation is optional.

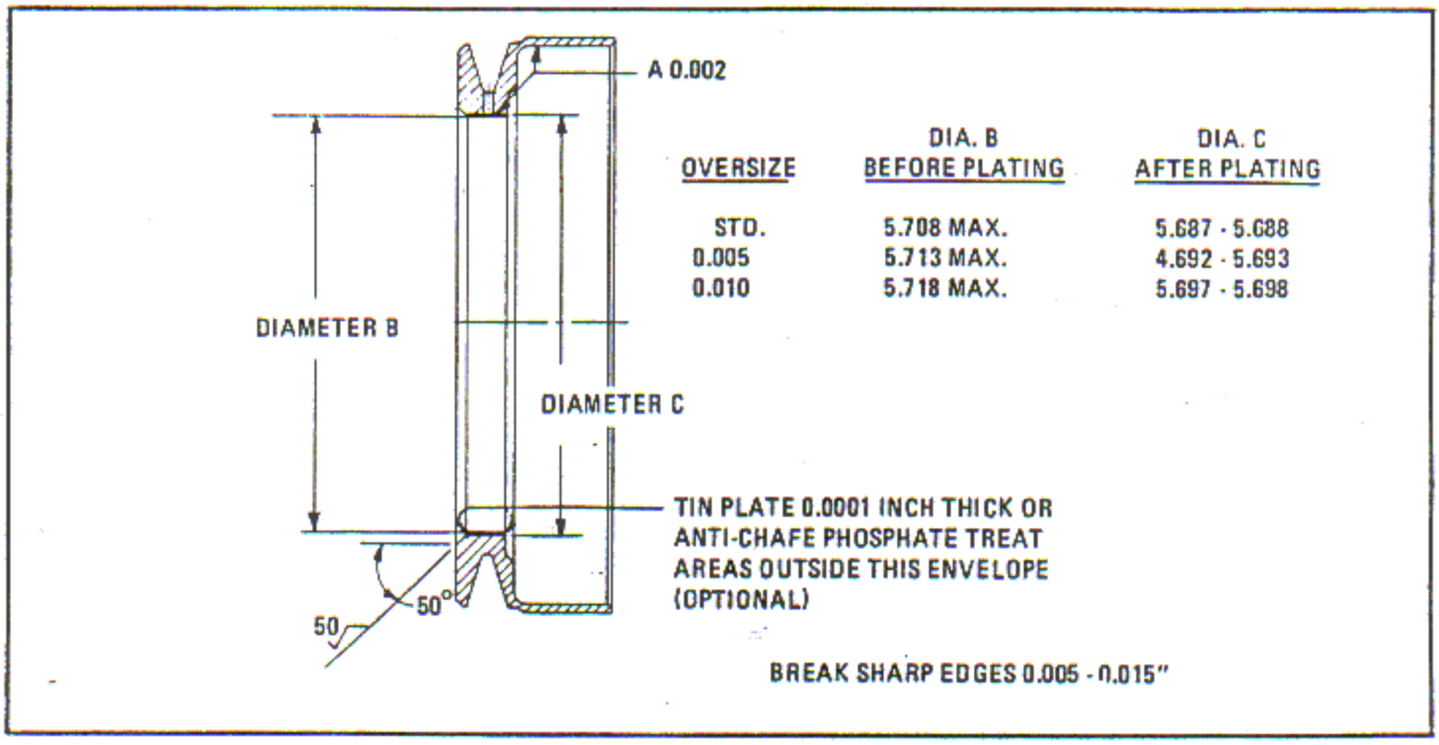

OVERSIZE	DIA. B BEFORE PLATING	DIA. C AFTER PLATING
STD.	5.708 MAX.	5.687 - 5.688
0.005	5.713 MAX.	4.692 - 5.693
0.010	5.718 MAX.	5.697 - 5.698

Figure 6-250. Grinding Crankcase Front Main Section Retaining Ring

6-786. CRANKSHAFT RECONDITIONING BY CHROME PLATING.

6-786A. Crankshafts with worn bearing journals and/or main bearing thrust faces may be ground and plated back to size. The maximum plate thickness after final grinding is 0.005 inch on the journals and 0.010 inch on the thrust faces.

a. If a journal only or a thrust face only is to be ground, dress the wheel for a corner radius of 0.03 inch. Stop the grinding at the fillet radius. If both a journal and its adjacent thrust face are to be ground, dress the wheel for a fillet radius of 0.172 - 0.188 inch when grinding crankshaft front sections; dress for a fillet radius of 0.115 - 0.135 inch when grinding crankshaft rear sections.

b. Grind the journal and/or thrust face to clean up only. Grind the fillet radius of the journal and the thrust face are being ground together. Otherwise, stop at the fillet. Maintain journal concentricity within 0.001 inch full indicator reading.

c. Shot peen the thrust faces and fillet radii. Use size S-330 shot and peening intensity 14A2.

d. If plating the thrust face only, mask to allow plating of approximately one-third of the fillet radius. Use slowest practical chrome deposition rate for most uniform thickness over the thrust face and into the fillet radius.

e. Chrome plate the journal OD and/or the thrust face to a thickness sufficient to permit regrinding to the finished dimensions.

f. Finish grind the journals to the A or D dimensions and the thrust faces to the B or C dimensions. The front thrust face minimum OD shall be 4.820 inches and the maximum ID, 4.125 inches. The rear thrust face minimum OD shall be 4.460 inches and the maximum ID, 3.822 inches. See figure 6-252.

g. The thrust face must be flat and square with the crankpin diameter within 0.0005 inch. From the maximum ID, smoothly blend the plating into the fillet radius, undercutting the thrust face surface to a depth equal to the plating thickness as necessary to eliminate discontinuities which may occur near the masking during the plating process. Break sharp edges at the ID and OD of the plating.

h. In cases where the front fillet radius has been reduced below 0.172 inch by previous rework, a minimum radius of 0.130 inch will be acceptable if the crankshaft does not otherwise require grinding in that area or if it is not possible to restore a

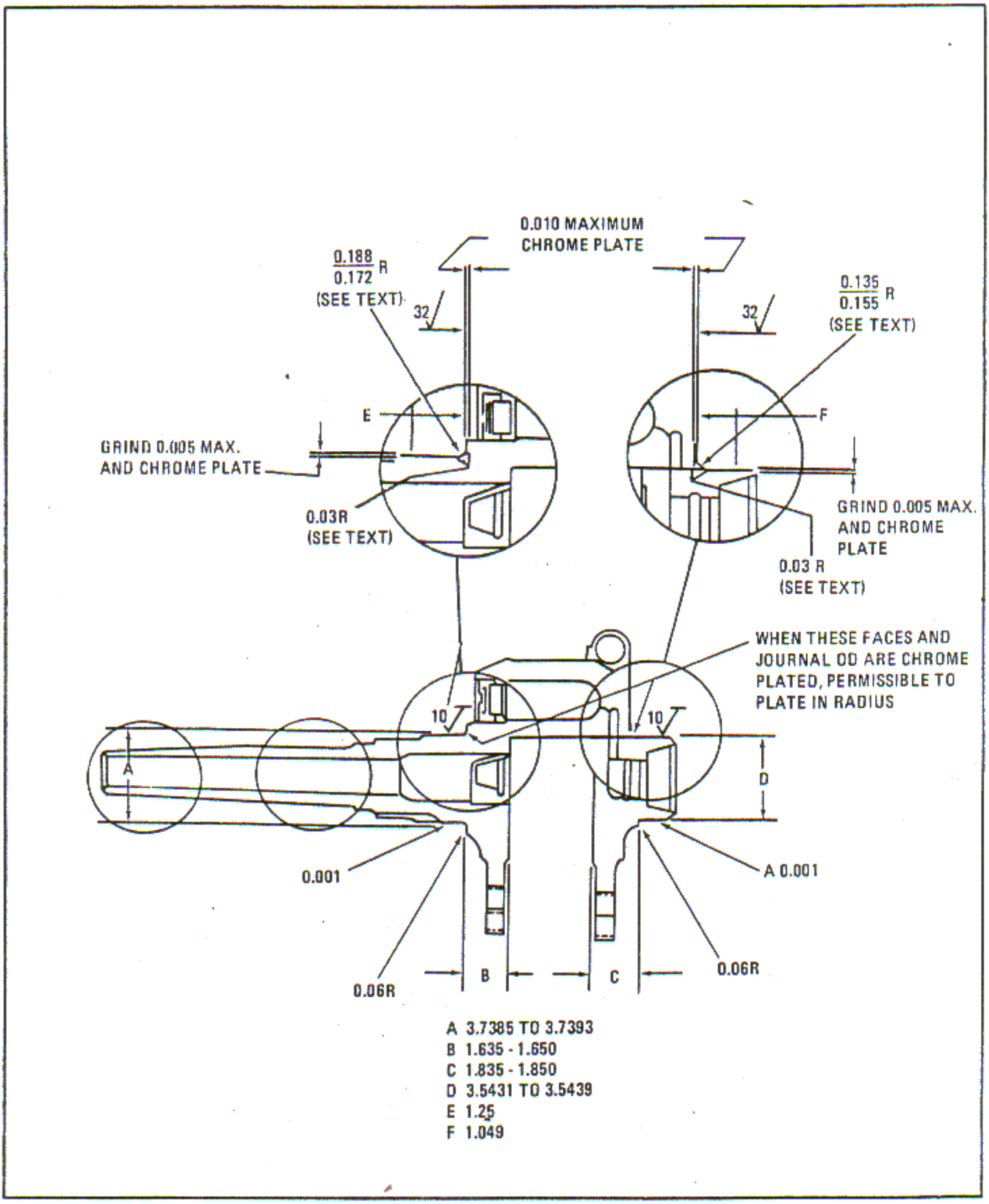

Figure 6-251. Crankshaft Main Bearing Journals and Thrust Faces

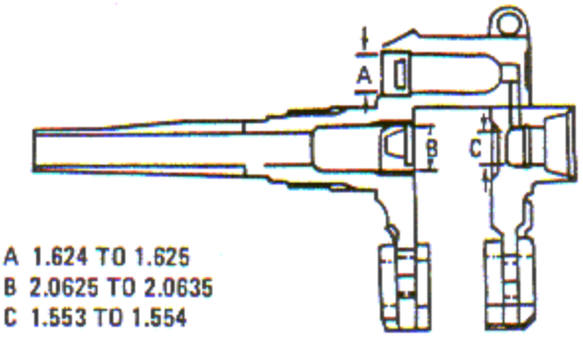

A 1.624 TO 1.625
B 2.0625 TO 2.0635
C 1.553 TO 1.554

Figure 6-252. Crankshaft Salvage Limits

larger radius without grinding below specified minimums.

i. Inspect the thrust faces by the penetrant method. If cracked, the plating/machining procedure shall be repeated or the part shall be rejected. Light crazing, commonly associated with chrome plating, is acceptable.

6-787. CRANKSHAFT SALVAGE LIMITS. Crankshafts that are worn in the sealing areas of the breather substituting plug, the crankpin sludge plug or the accessory drive and starter shaft coupling can be salvaged by grinding the defective surfaces and chrome plating. See figure 6-252. The maximum finished plate thickness is 0.005 inch at each location. The required surface finish is 20, 40 and 60 microinches rms at locations A, B, C respectively.

6-788. STATIONARY REDUCTION GEAR (R1820-76 SERIES, -86A, -86B). Stationary reduction gears, worn beyond maximum allowable inside diameter dimension of 4.832 inches, may be reconditioned by providing hard chrome plating not to exceed 0.005 inch in thickness on inside diameter. This will assist in the installation of the 0.015 inch oversize thrust bearing spacer oil seal ring.

a. Stationary reduction gear flange faces which cannot be reconditioned in accordance with paragraph 6-286, may be additionally ground 0.003 - 0.005 inch below the 0.255 - 0.257 inch dimension minimum limit, as shown in figure 6-64, and chromium plated sufficiently to permit regrinding to the dimensional requirements of figure 6-64. Break sharp edges not to exceed 0.010 inch.

6-789. STATIONARY REDUCTION GEAR SUPPORT SLEEVE (R1820-80 SERIES). If the above sleeve cannot be cleaned up by honing to its maximum oversize, but is otherwise satisfactory and secure in the stationary reduction gear support, it may be further utilized by chrome plating as follows.

a. Plug all oil holes and mount the assembly on a suitable grinder.

b. Indicate the shoulder OD and flange face to run square and true within 0.001 inch full indicator reading.

c. Grind the ID of the sleeve as required to clean up the entire surface.

d. Prior to plating, completely mask the entire assembly, less the areas to be plated. Plug all holes with lead or wooden plugs.

e. Chrome plate the ID of the sleeve in accordance with standard procedures. Finish thickness of plate after grinding shall not exceed 0.005 inch.

f. Regrind the ID to clean up only. Maximum diameter is 4.832 inches. Obtain an 8 microinch rms or better finish.

g. Thoroughly clean and strip the assembly after grinding. Imperfect plating within 0.050 inch of all holes and edges is permissible.

NOTE

If discrepancies exist after grinding, replace the sleeve.

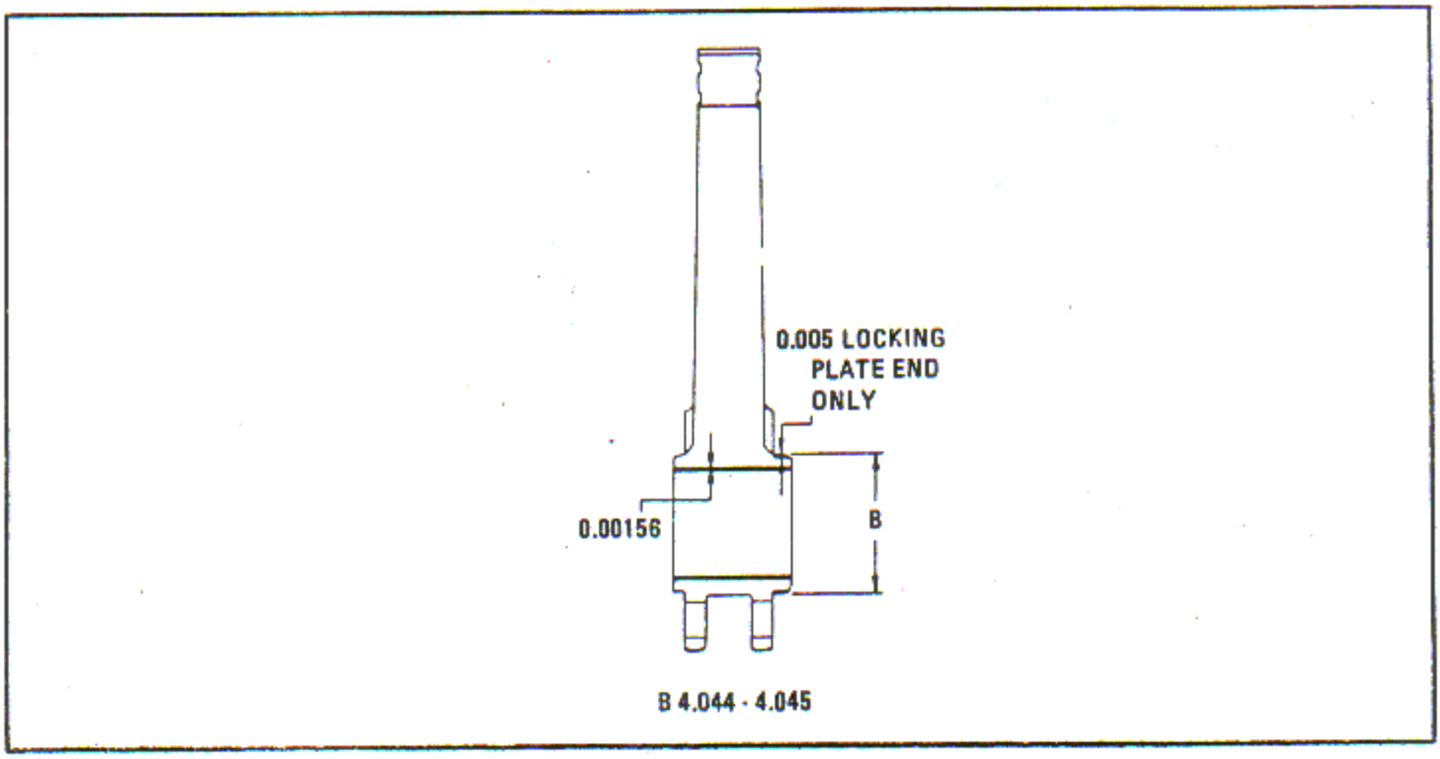

Figure 6-253. Master Rod

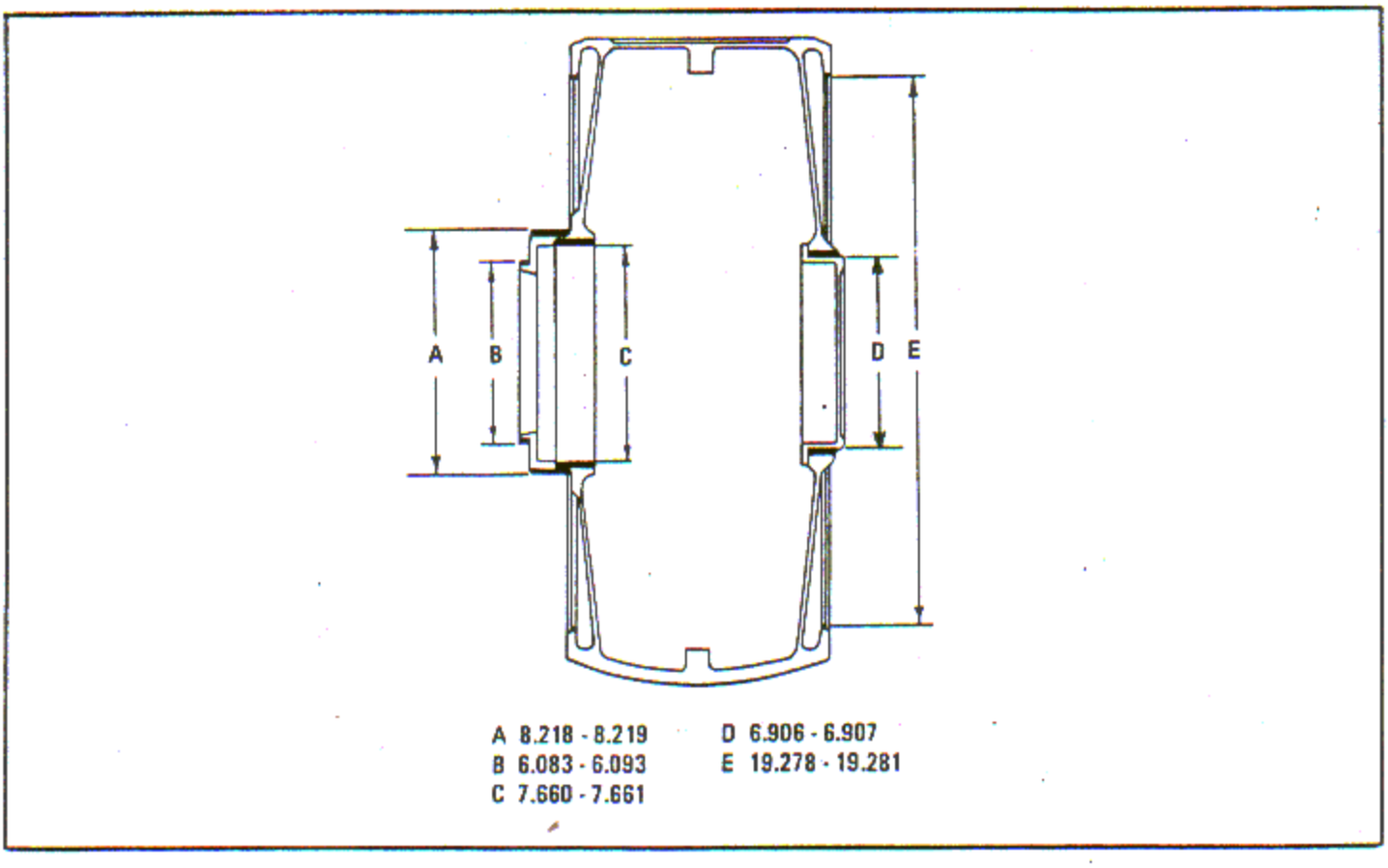

Figure 6-254. Crankcase Main Section

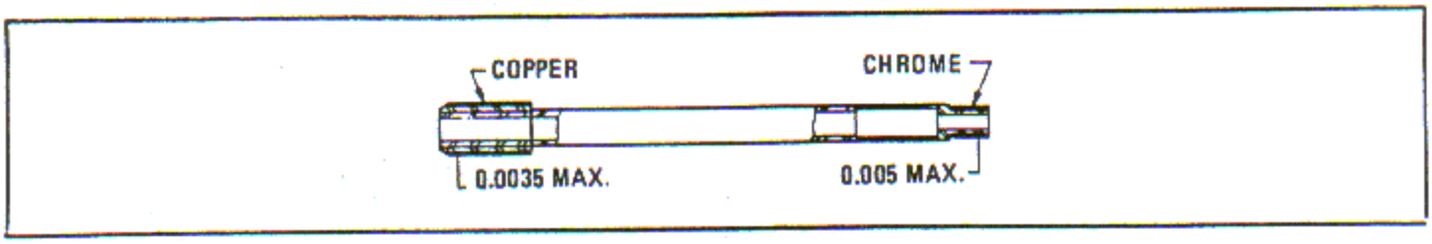

Figure 6-255. Supercharger Drain Valve Return Tube

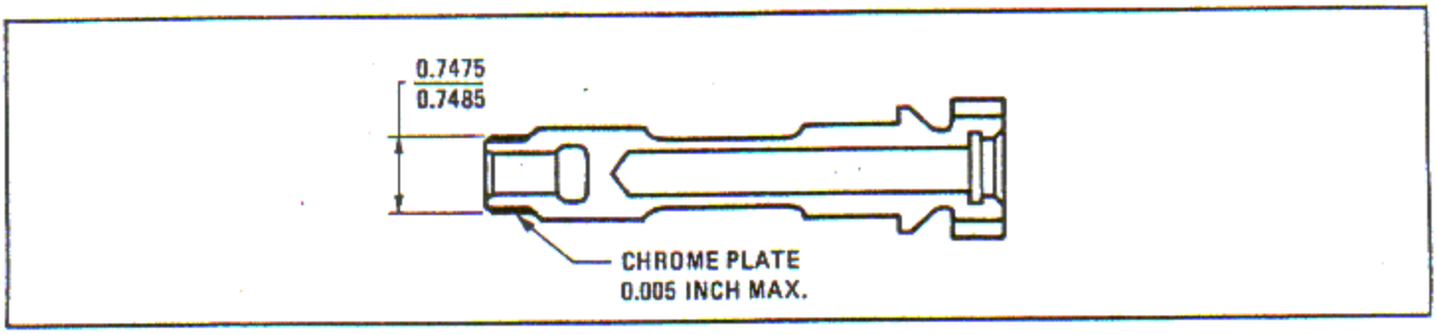

Figure 6-256. Fuel Pump Drive Gear Shaft

6-790. CRANKCASE MAIN SECTION. The A and C surfaces may also be restored by the plasma spray process. Metco 404 powder, or equivalent, shall be used and the finished thickness shall be a minimum of 0.004 inch. See figure 6-254.

6-791. IMPELLER SHAFT SLEEVE AND SUPPORT. The impeller rear shaft sleeve and the impeller front shaft support that have experienced ring wear beyond authorized reconditioning limits can be salvaged by chrome plating the ID. All sleeves and supports that are worn beyond the maximum allowable 0.010 inch oversize original part ID of 2.203 - 2.202 inches may be reconditioned by hard chrome plating not exceeding 0.005 inch in thickness on the ID. Prior to plating, the maximum ID after grinding should not exceed 2.213 inches.

6-792. GENERATOR DRIVE GEARS. Generator drive gears that are worn in the area where contact is made with the generator drive gear oil seal may be reconditioned as outlined in steps a through c.

a. Grind the affected area 0.010 inch for a distance of 0.620 - 0.640 inch along the shaft, measuring from rear toward the propeller end. See figure 6-257. The maximum OD grinding dimension on the shaft is 1.205 - 1.206 inches.

b. Deposit enough chromium plate to allow for finish grinding operation.

c. Finish grind the plated area to 1.215 - 1.216 inches. The thickness of the chromium plate may not exceed 0.005 inch and the plated area must be concentric with the bearing journal after finish grinding.

6-793. DUAL ACCESSORY DRIVE GEAR. Dual accessory drive gears that are worn by contact with the oil seal may be reconditioned by the following procedure.

a. Surfaces worn at location A, figure 6-258, may be ground to a minimum diameter of 0.864 inch, chrome plated, and finish ground to restore the original OD of 0.876 - 0.874 inch.

b. The restored surface shall be concentric with adjacent surface B to 0.001 inch FIR and have a surface finish of 8 microinches or better. Break sharp edges 0.003 - 0.015 inch approximate radius.

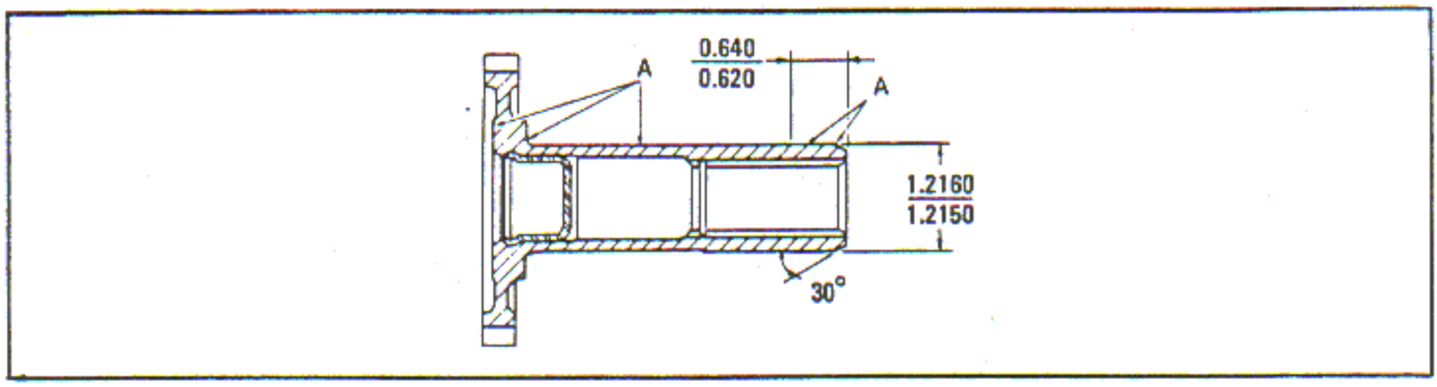

Figure 6-257. Generator Drive Gear

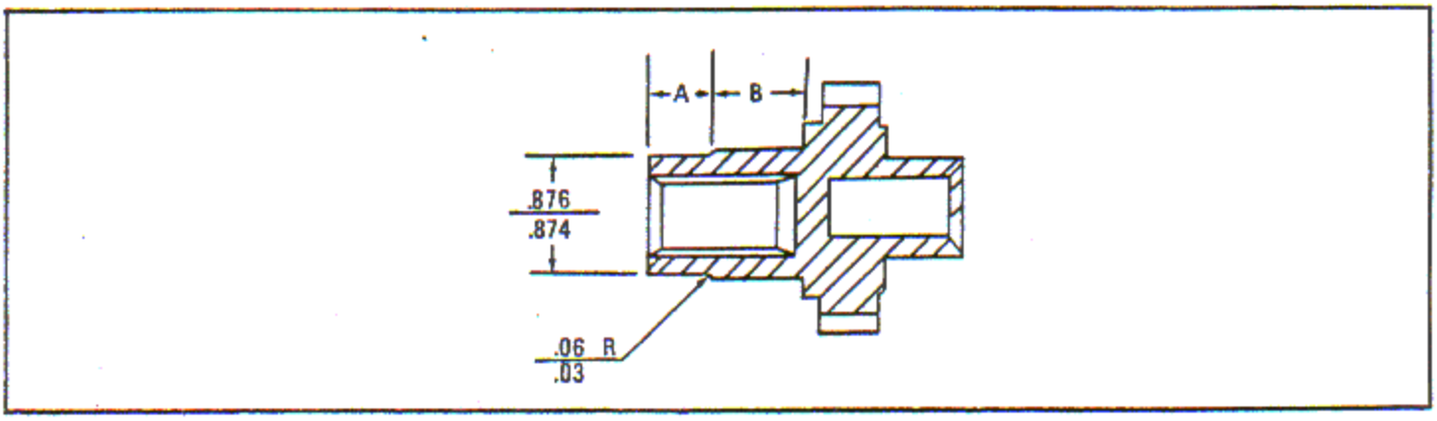

Figure 6-258. Dual Accessory Drive Gear

6-794. MAGNETO DRIVE SHAFT. Magneto drive shafts found to be worn at the area contacted by magneto drive gear oil seal may be salvaged by chrome plating using standard procedures.

NOTE

Magneto drive gears are to be inspected to ensure no drilled hole or breakthrough exists in the web at the center of the shaft. Parts having a drilled hole or breakthrough can be reworked by filling the hole with soft solder.

a. The OD of the affected area may be ground to a minimum of 1.205 inches for a distance of 0.620 - 0.640 inch measuring from the anti-propeller end toward propeller end prior to plating. See area A in figure 6-259.

b. The thickness of chrome plate must not exceed 0.005 inch, and must be of constant diameter with the nonplated portion of shaft after finish grinding to the OD limit which is 1.2155 - 1.2165 inches. See diameter B in figure 6-259.

c. Inspect the finished shaft for conformity with the previous instructions, followed by Magnaflux and Zyglo inspections. Refer to paragraph 6-26 and 6-53A respectively.

6-795. ACCESSORY DRIVE AND STARTER SHAFT. Accessory drive and starter shafts wear at oil sealing surfaces A and B, figure 6-260, and on the OD of the flange lugs, figure 6-262.

a. When a shaft is worn at location B, figure 6-260, beyond the range of ring oversizes, it is permissible to grind the shaft to clean up and then chrome plate. When a shaft is worn to the extent that a satisfactory fit cannot be obtained with the accessory drive and starter shaft oil retaining plug, it is permissible to recondition the worn surface in accordance with paragraph 6-796.

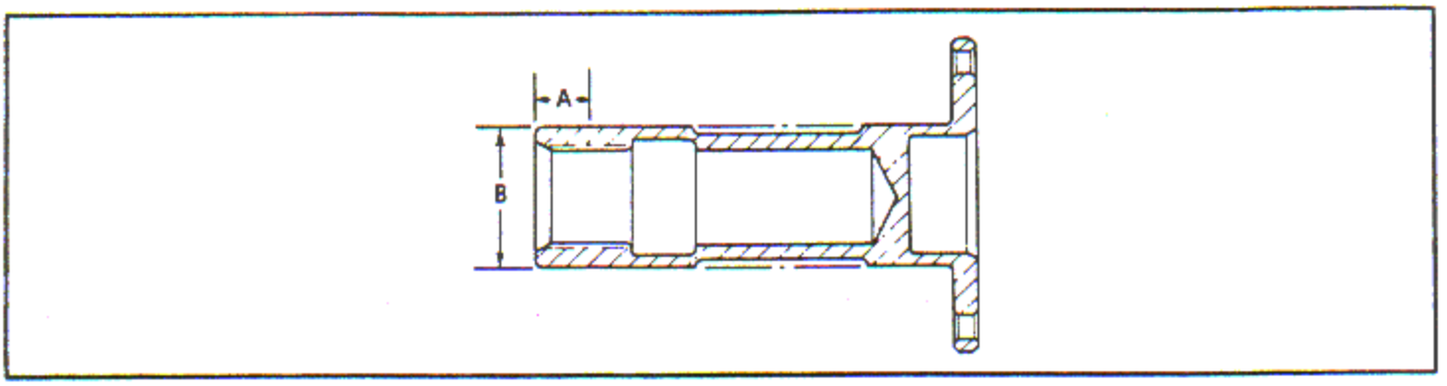

Figure 6-259. Magneto Drive Shaft

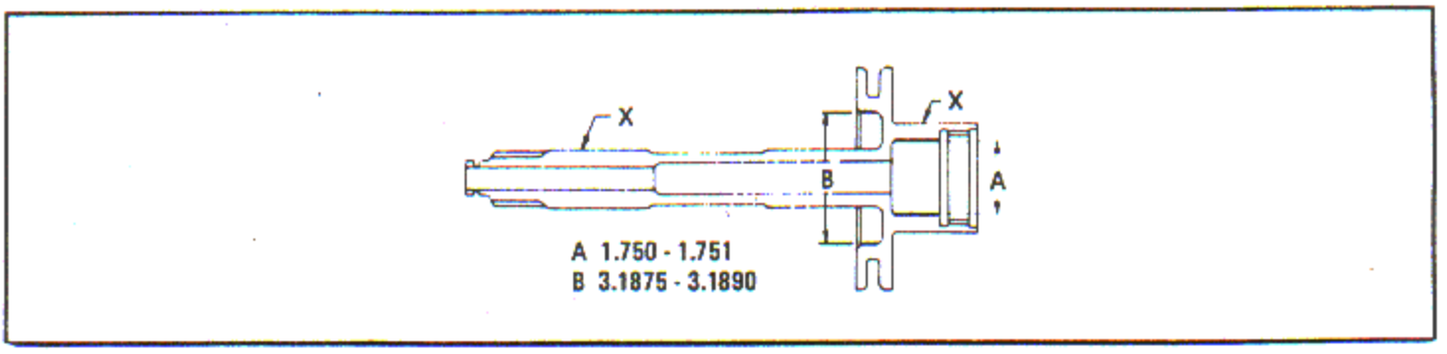

Figure 6-260. Accessory Drive and Starter Shaft Reconditioning Limits

b. Grind the plated surface to the dimensions shown, which is within the range of the largest ring. The maximum finished plate thickness is 0.005 inch. The B surface must be true within 0.001 inch full indicator reading when shaft is mounted on the X surfaces. The required surface finish is 16 microinches rms or better. Break sharp edges 0.01 - 0.03 inch approximate radius.

c. Surface A, figure 6-260, can be ground, plated and reground to the dimensions shown. The maximum finished plate thickness is 0.005 inch. The required surface finish is 40 microinches rms or better. Break sharp edges 0.01 - 0.03 inch approximate radius. The A surface must be true within 0.002 inch full indicator reading when the shaft is mounted on the X surfaces.

d. Grind the OD of the flange lugs to clean up. Chrome plate and grind to dimension shown in figure 6-262. The OD of the lugs must run true within 0.002 inch full indicator reading when the shaft is mounted on the X surfaces. Refer to figure 6-260. The required surface finish is 16 microinches rms or better. Break sharp edges 0.01 0.03 inch approximate radius.

6-796. ACCESSORY DRIVE AND STARTER SHAFT OIL RETAINING PLUG.

a. Accessory drive and starter shaft oil retaining plugs which are worn to the extent that a satisfactory fit cannot be obtained with the accessory drive and starter shaft may be copper plated as shown in figure 6-261.

b. For local application, Type II copper plate the accessory drive and starter shaft oil retaining plug in the area shown in figure 6-261.

6-797. CRANKSHAFT COUNTERWEIGHTS COPPER PLATING. See figure 6-263. In order to alleviate galling of the counterweights where they contact the crankshaft blades, copper plate the affected surfaces of the counterweights 0.0002 - 0.0010 inch thick per AMS 2418 to obtain the 0.455 - 0.459 inch dimensions as shown. Remove all traces of galling before plating.

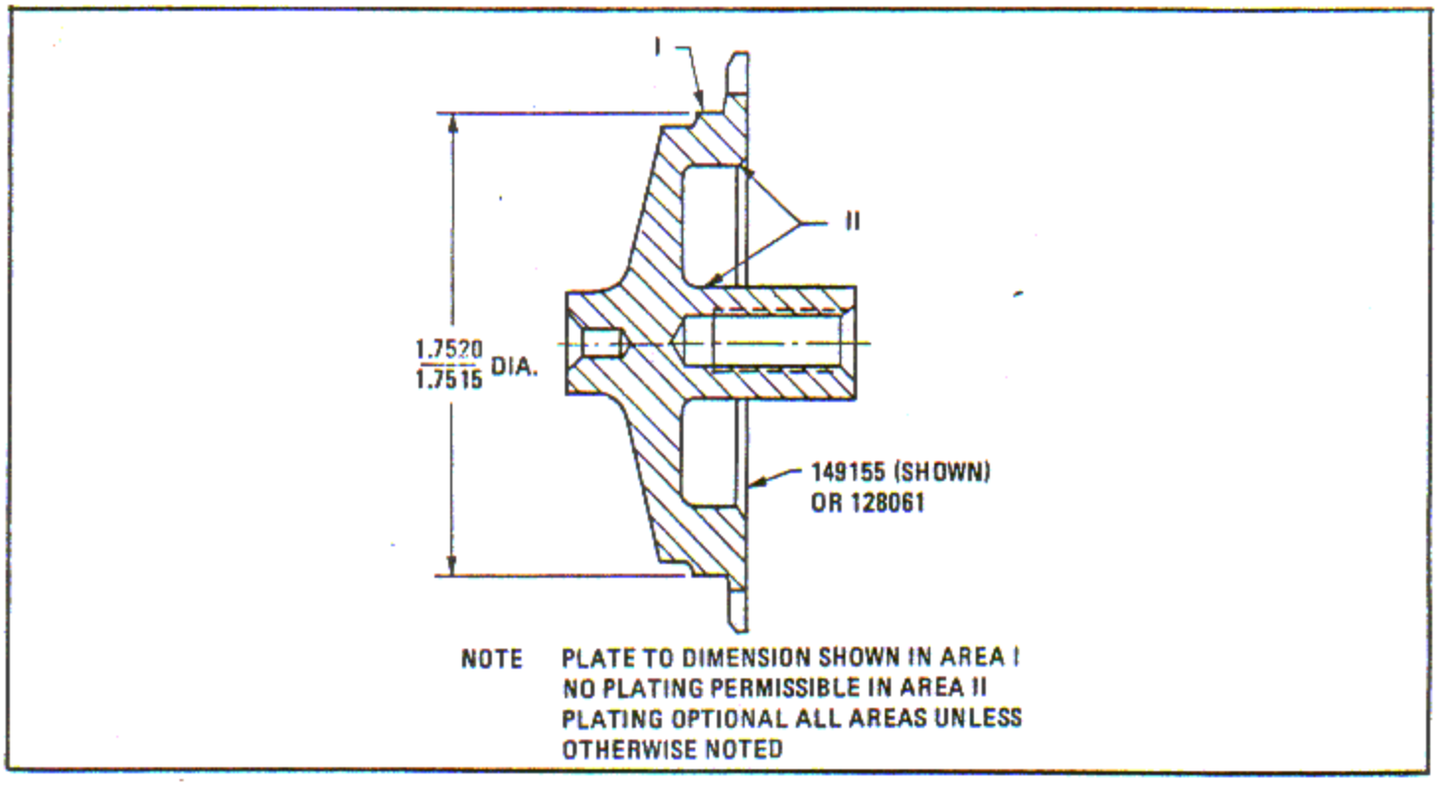

Figure 6-261. Reconditioning Accessory Drive and Starter Shaft Oil Retaining Plug

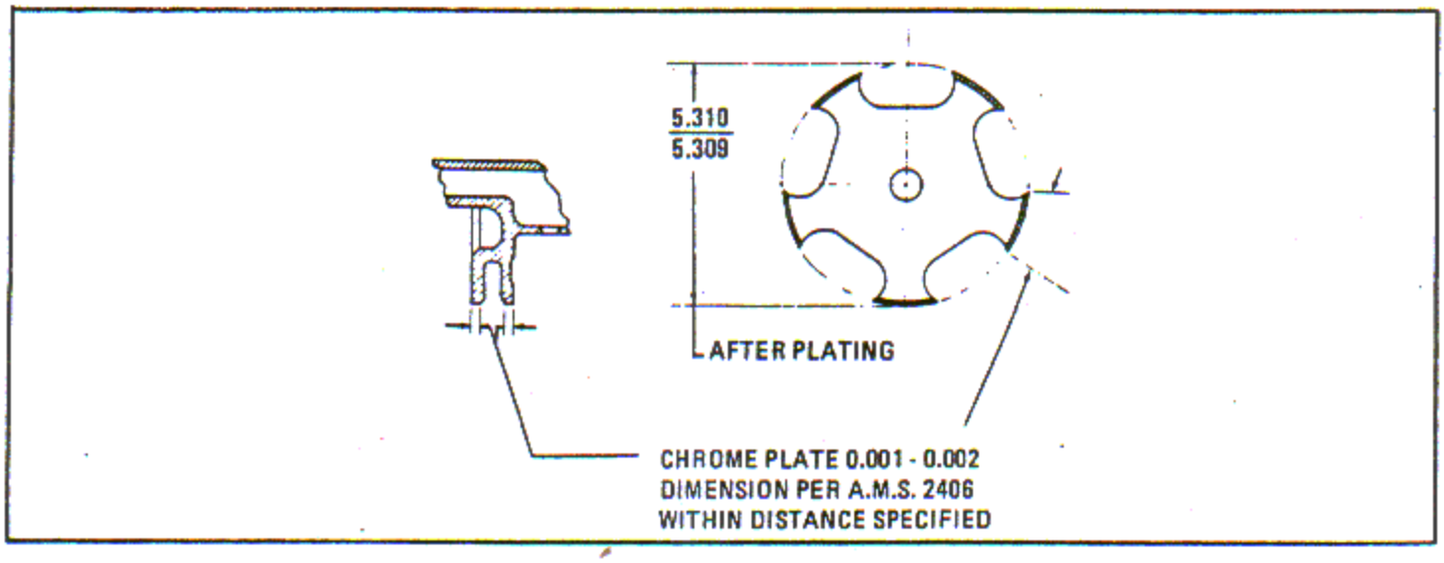

Figure 6-262. Accessory Drive and Starter Shaft Pilot

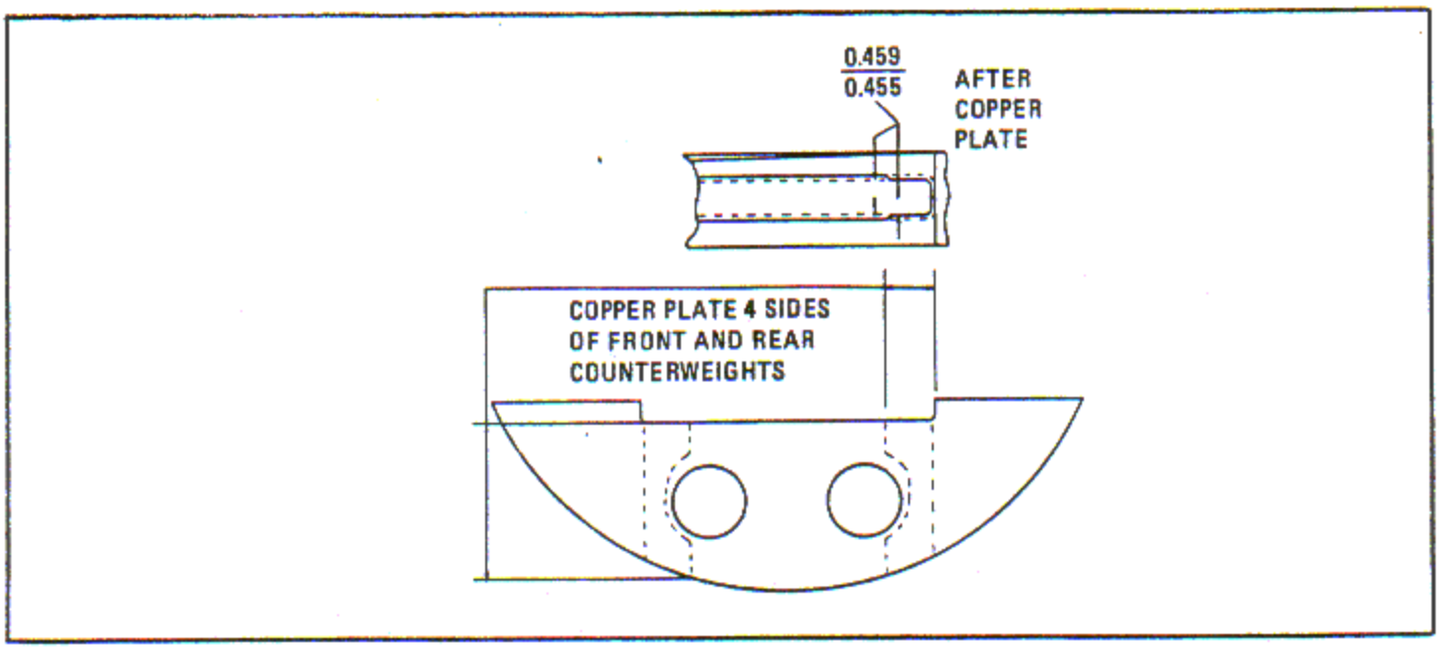

Figure 6-263. Front and Rear Counterweights Copper Plating Limits

6-798. CRANKSHAFT FRONT AND REAR END, PLATING AND NITRIDING.

6-799. Crankshaft Identification.

a. Disassemble the crankshaft and determine if the crankshaft front or rear has been previously nitrided by performing a hardness check. A hardness reading of Rockwell Superficial 15N74-79 on the blade area, as shown, indicates that the part is soft and requires nitriding. A case hardness of Rockwell Superficial 15N86 or higher indicates the part has been nitrided. See figure 6-264.

b. Incorporate all necessary reconditioning and modifications in accordance with R1820 Power Plant Bulletins and the applicable sections of the Overhaul Manual prior to nitriding. Blade thickness after rework shall not be less than 0.896 inch as shown. Leave the crankshaft completely disassembled with matching parts identified.

NOTE

Mark the bronze rear counterweight crankshaft bearings in relation to their installed locations because of the 0° 3'26" angle in the bushing ID. Mark the bearing to indicate the bearing match number, anti-propeller end and location in crankshaft.

6-800. Crankshaft Rear End Radii Reconditioning.

a. Break all sharp edges and blend with an approximate 0.06 - 0.08 inch radius around the screw hole spotface. All radii to have a surface finish of 32 microinches rms or better. See figure 6-265.

b. Abrasive blast the area indicated at the clamp screw head counterbore using No. 180 grit aluminum oxide (American Graded Sand Co., 189 East 7th Street, Paterson, N.J.) at 50 psi pressure. Ensure all glaze is eliminated from the polished surfaces. Insulate the screw bore with a suitable rubber plug.

NOTE

Inspect the rear cheek at the clamping screw counterbore area for adhesive copper from the clamping screw washer. Remove any copper by chemical or mechanical means.

6-801. Strip Resin Coating and Chromium Plate.

a. Strip the resin coating in accordance with paragraph 6-907. Coat the parts with a preservative compound if parts are not to be further processed immediately. See figure 6-266.

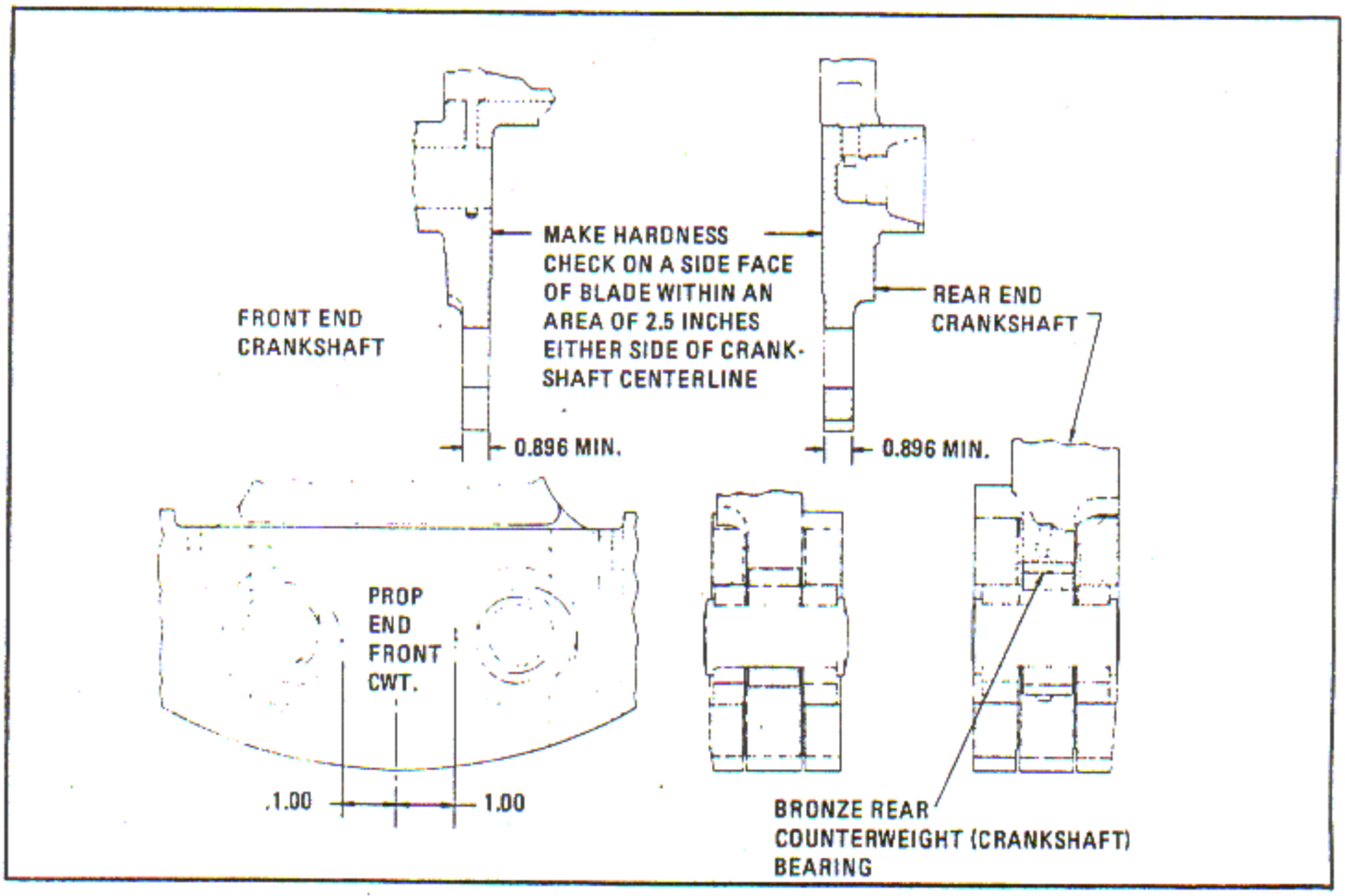

Figure 6-264. Crankshaft Identification and Hardness Check

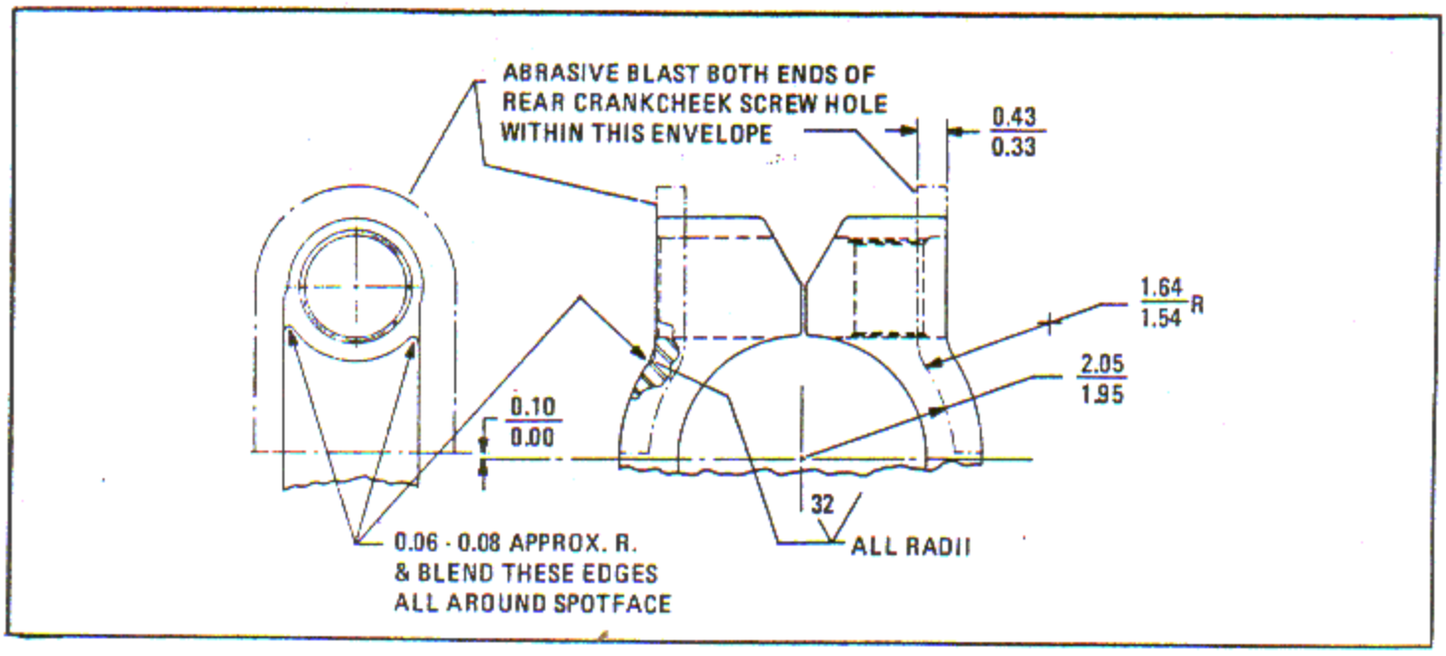

Figure 6-265. Crankshaft Rear End Reconditioning

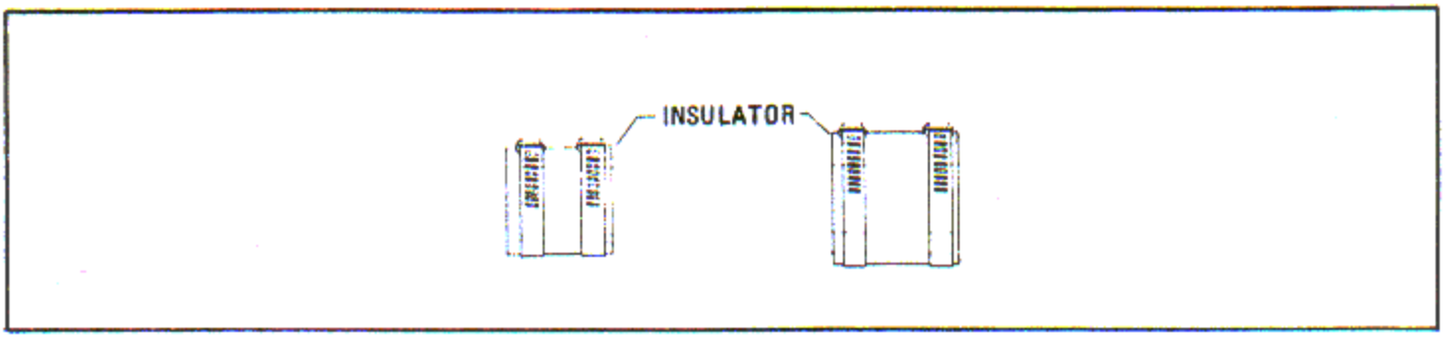

Figure 6-266. Insulating Crankshaft for Resin Coating and Chromium Plating Stripping

b. Strip the 0.0001 - 0.0002 inch thickness of chromium plate from the crankshaft front and rear main bearing journals in accordance with paragraph 6-866.

c. Insulate the heavy chromium plated propeller shaft journals not to be chromium stripped or bronze plated with insulator, group 28. Leave insulators on for the next operation.

6-802. BRONZE PLATE CRANKSHAFT FRONT AND REAR.

a. Degrease the crankshaft in a vapor degreaser. Rinse in warm water, then in cold water.

b. Electro-clean the part in an anodic cleaner for 1-1/2 to 3 minutes and rinse in warm water.

c. Immerse the part in muriatic acid for 1-1/2 to 3 minutes and rinse in cold water.

d. Dip the part in a cyanide solution for 1-1/2 to 3 minutes.

NOTE

Parts must be processed through the appropriate plating tank immediately after step d.

e. Immerse the part in a bronze plate solution and plate at 15 - 25 amperes per square foot for 40 - 45 minutes to obtain a minimum thickness of 0.0007 inch. The bronze plate shall consist of electrolytic co-deposit of metallic copper and tin directly on the cleaned surfaces. The composition of the deposit shall be approximately 10 percent tin and the remainder copper.

NOTE

Less than five percent tin does not have reliable properties, while more than 15 percent tin is superfluous. Refer to Engine Bulletin No. 511, Revision A, for bronze plating and stripping solutions and controls.

f. The copper-tin plate shall be adherent, dense, uniform and free from blisters, nodules, pin holes and other defects detrimental to its use, or to the performance of the finished part. Discoloration of plating shall not be cause for rejection before nitriding.

g. The plated part shall be subject to inspection by any method which will reveal defects or nonconformance to specified bronze plating. Parts rejected for defective plating shall be stripped before replating. Double plating and spotting-in after plating shall be cause for rejection.

h. Rinse the part in cold water and then in hot water. Blow dry with an air blast.

i. Remove insulators.

6-803. CRANKSHAFT INSULATING AND BRONZE PLATE STRIPPING. (See tool group 28.)

a. Install insulator (1, figure 6-267) using draw bar on the crankshaft front extension which is to remain plated.

b. Attach plug insulator (5) and fixture insulator (3) to the rear crankshaft (4) as shown, and apply Stop-Off lacquer (Fidelity Chemical Products Corp., Newark, N.J.) to the required areas.

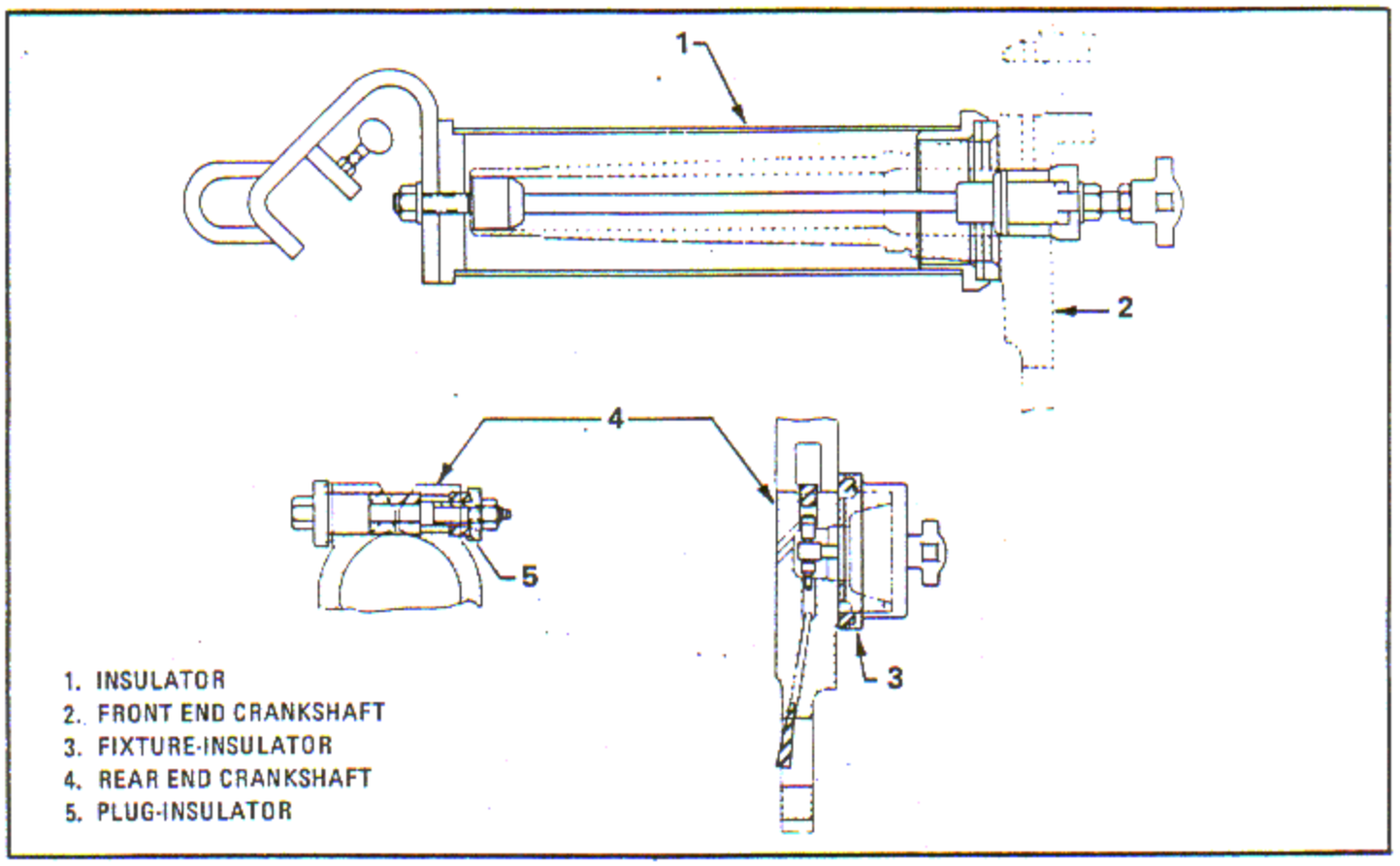

Figure 6-267. Insulating Crankshaft for Bronze Plating Stripping

c. Clean the surfaces to be stipped of bronzed plating by scrubbing with finely powdered pumice, Federal Specification SS-P-821, and water, then rinse.

d. Vapor degrease the scrubbed parts.

e. Immerse the cleaned parts in a bronze strip solution until the bronze plating is completely removed.

f. Rinse the parts with cold water, then remove all of the insulators and Stop-Off lacquer.

g. Dip the parts in soluble oil and slush completely.

6-804. BONDERIZE CRANKSHAFT. Bonderize the crankshaft surfaces to be nitrided in accordance with Specification AMS-2480.

6-805. INSULATE COUNTERBORE AREA. Using insulating paint (Griffin's "HYTEMP," George R. Mowat Co., 24 West 40th Street, New York, N.Y. 10017, or equivalent), insulate around the counterbore of the clamping screw hole in the rear cheek. Apply the insulating solution with a small brush and air dry.

6-806. CRANKSHAFT FRONT AND REAR NITRIDING.

a. The nitriding temperature shall be held at 524°C (975°F) to produce a nitride case depth of 0.020 - 0.025 inch all over unless otherwise specified. See figure 6-268.

b. Ammonia disassociation in the furnace shall be controlled to 20 - 30 percent and shall be checked at two hour intervals throughout the nitriding period. The amount of ammonia required will be approximately 30 cubic feet per hour for each 100 square feet of surface to be nitrided.

c. All air in the furnace muffle must have been displaced by ammonia prior to heating the parts. This air-free atmosphere must be maintained during the nitriding period and during cooling to below 204°C (400°F).

d. The case hardness of the nitrided surfaces shall be Rockwell Superficial 15N86 minimum.

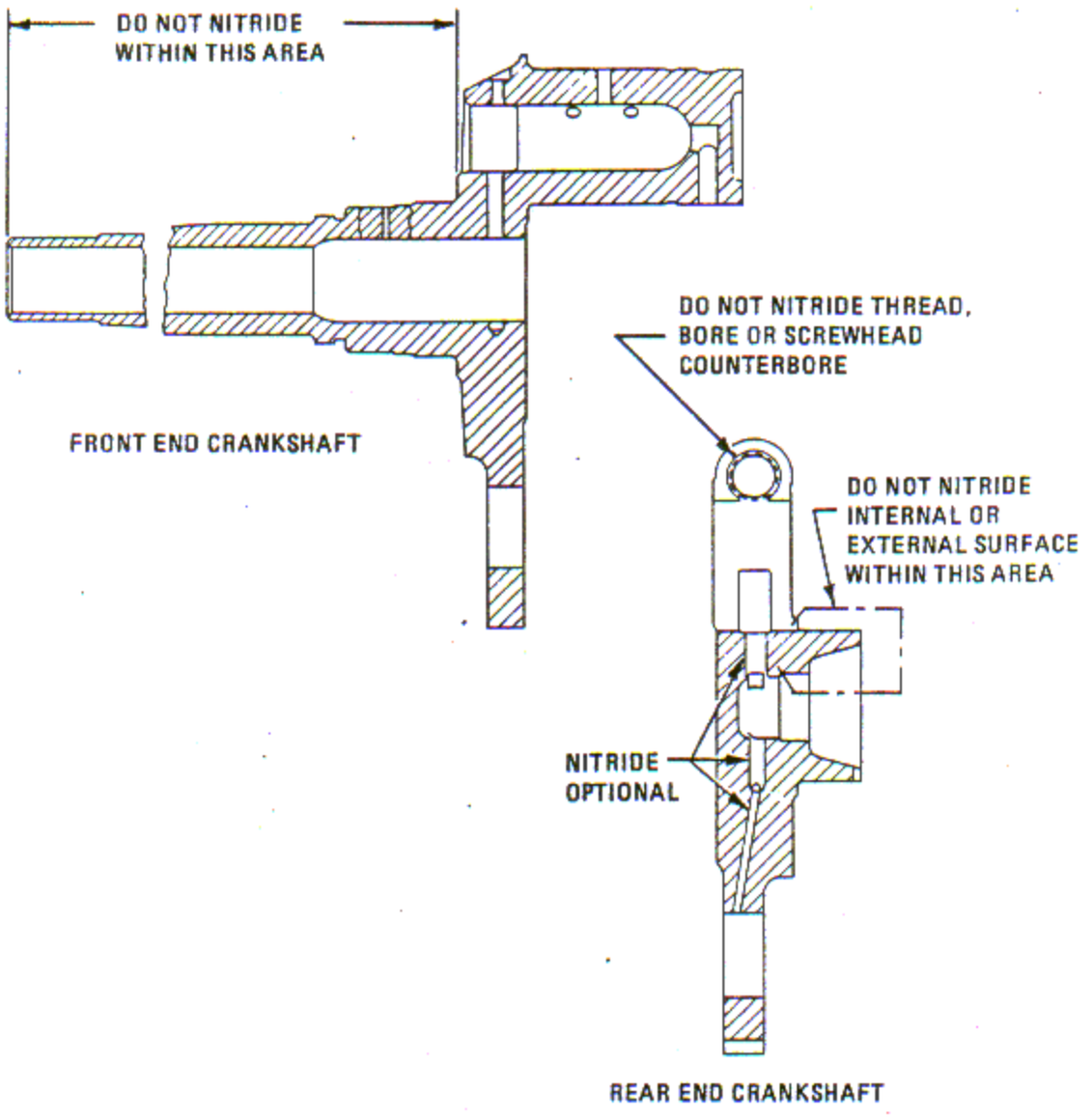

Figure 6-268. Nitriding Crankshaft Front and Rear

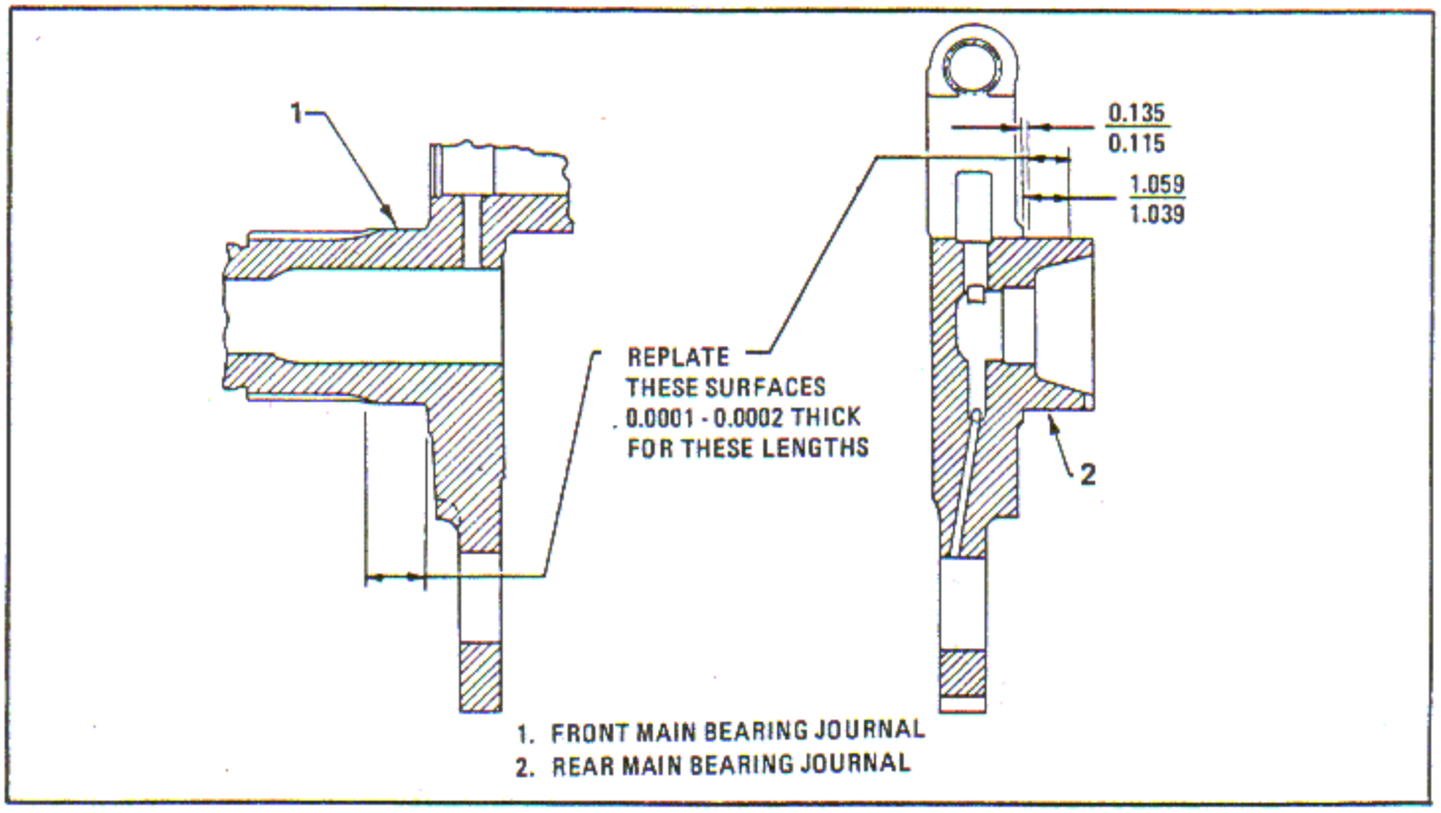

Figure 6-269. Chromium Plate Crankshaft Main Bearing Journals

e. The depth of the nitrided case produced shall be measured on a freshly fractured nitrided specimen of heat treated nickel chromium molybdenum steel, AMS 6415-HT9. Measurement shall be from the surface of the specimen to the inner boundary of the case as shown by the fracture, using a Brinell glass or equivalent.

CAUTION

Nickel chromium molybdenum steel must not be nitrided when core hardness is below Brinell 285. Nitrided parts must never be straightened under any circumstances.

f. Check the bronze plate insulated areas of the crankshaft to ensure the nitride has not penetrated. Inspect the parts after nitriding for adherence of plate using blasting or wire brush, if necessary. Any indication of peeling, blistering or some similar defect will be cause for rejection.

6-807. BRONZE PLATE INSULATION STRIPPING. (See tool group 28.)

a. Abrasive clean the rear cheek clamping screw counterbore area with No. 180 grit aluminum oxide at 50 psi pressure to remove the Griffin's Hytemp insulating paint.

b. Mask the heavy chromium plated crankshaft front extension journals with insulator as shown in figure 6-266.

c. Bronze plate strip the crankshaft parts in accordance with paragraph 6-803.

6-808. CHROMIUM PLATE CRANKSHAFT MAIN BEARING JOURNALS.

a. Mask the front crankshaft all over except the front 3.7385 - 3.7393 inch OD main bearing journal as shown. See figure 6-269.

b. Mask the rear crankshaft all over except the rear main bearing journal for the length shown.

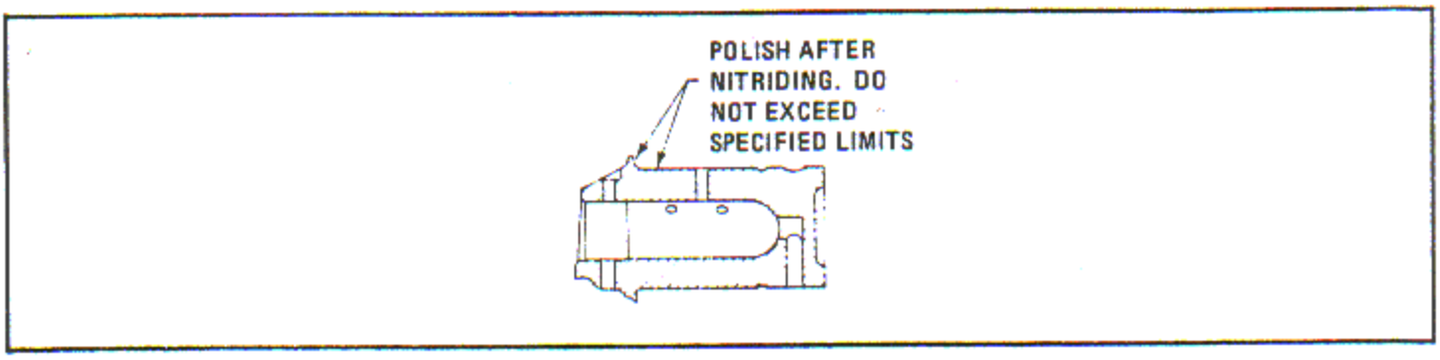

Figure 6-270. Polish Nitrided Wear Surfaces

c. Chromium plate both journals 0.0001 - 0.0002 inch thick as shown in accordance with Specification AMS-2406, except omit treatment for removal of hydrogen embrittlement.

NOTE

Plate at 35 amperes for 16 minutes to obtain a 0.0002 inch thickness.

6-809. REASSEMBLE NITRIDED CRANKSHAFT.

a. Polish all nitrided critical wear surfaces as shown, but do not exceed specified service limits. See figure 6-270.

b. Reassemble the nitrided crankshaft in accordance with paragraphs 7-18, 7-19 and 7-21.

6-810. CRANKCHEEK CLAMP SCREW SALVAGE BY COPPER PLATING.

a. Remove the old plating from the crankcheek clamp screws using standard stripping procedure.

b. Copper plate the crankcheek clamp screws 0.0001 - 0.0002 inch thick all over using procedure in paragraph 6-881.

NOTE

Plating of the drill hole at one end and the chamfer at both ends is optional.

6-811. CRANKSHAFT CRANKPIN CLAMPING SURFACE COPPER PLATING.

6-811A. Copper plating shall be applied to each crankpin clamping surface in accordance with the following procedure. This plating shall be subsequently stripped and reapplied at each overhaul. See figure 6-271.

a. Ensure the crankshaft front is demagnetized before plating.

b. Degrease the crankpin clamping surface and surrounding area.

c. Insulate or mask to plate the clamping surface shown in figure 6-271. Plug hole in clamping journal.

d. Electroclean the surface to be plated in accordance with the procedure specified in NARF JAX LPS 3-70.

e. Rinse throughly in clean, cold water.

f. Rinse thoroughly in second source of clean, cold water and inspect for water breaks. Repeat cleaning cycle if water breaks are present.

g. Immerse plating surface in hydrochloric acid, solution #9 of NARF JAX LPS 3-70, for 45 seconds.

h. Rinse thoroughly in clean, cold water. Inspect for water breaks or smut. If present, scrub with pumice of "Scotch Brite."

i. Dip the plating surface in sodium cyanide solution #19 of NARF JAX LPS 3-70.

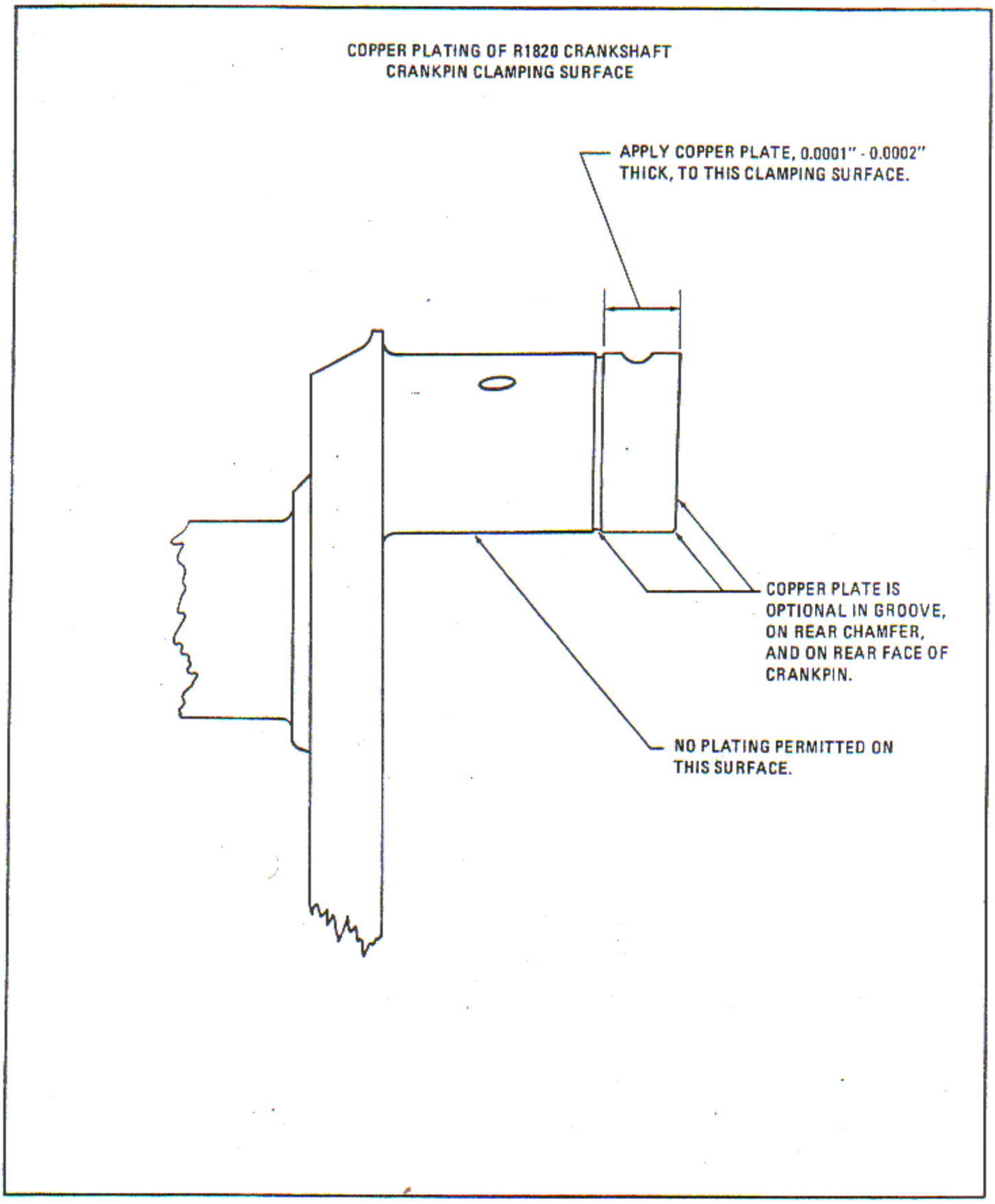

Figure 6-271. Crankshaft Crankpin Clamping Surface, Copper Plating

j. Apply copper strike to plating surface in accordance with NARF JAX LPS 3-70, section IX, paragraph 6.

k. Apply copper plating, 0.0001 to 0.0002 inch maximum thickness, in accordance with NARF JAX LPS 3-70, section IX, paragraph 6.

l. Rinse the part in clean, cold water.

m. Rinse the part in clean, hot water and blow dry.

n. Check the plate thickness with a Magne-gage or other suitable measuring instrument. Inspect for a smooth, continuous, adherent, uniform plate, free from pin holes, porosity, blisters, nodules, pits and other harmful defects. The plating deposit should not be coarsely crystalline. Slight staining or discoloration is not cause for rejection.

NOTE

Baking the part after plating is not required.

6-812. CRANKCASE MAIN SECTION CYLINDER DECKS COPPER PLATING. Inspect the cylinder decks and recondition as required using the following criteria:

a. Inspect the decks for surface damage such as fretting, corrosion, galling, spalling or abrasion from steel-to-steel contact. Check flatness; it shall not exceed 0.002 inch. Magnetic particle inspect each deck for cracks in accordance with paragraph 6-26.

b. Cylinder decks shall be copper plated or replated during overhaul as necessary. The copper prevents steel-to-steel contact. Copper plate to a thickness of 0.0003 - 0.0005 inch in accordance with paragraph 6-884. Crankcases may be plated all over.

NOTE

If the plating is intact and in satisfactory condition, replating is not required.

c. If copper plating is worn through, exposing bare steel on the cylinder decks, or if there is evidence of corrosion on the exterior surfaces, strip the copper as instructed in paragraph 6-882 and replate.

d. Recondition cylinder decks, if necessary, before plating in accordance with paragraph 6-328.

e. To provide additional corrosion protection to the exterior copper plated surfaces of R1820-76A, -76B, -76C, -76D engines, apply one coat of MIL-P-8585 zinc chromate primer. Allow to dry for approximately 30 minutes and then apply MIL-E-7729, Type I, engine gray gloss enamel to a dry film thickness of 0.8 - 1.2 mils.

NOTE

No paint is permitted on the copper plated cylinder mounting pads or any other clamping surfaces.

6-813. KNUCKLE PIN LOCK PLATE COPPER PLATING. The knuckle pin locking plate may be reconditioned in accordance with the following instructions.

a. A copper plated knuckle pin locking plate may be used with either a chrome or nonchrome plated master rod.

b. It is unnecessary to grind the knuckle pin locking plate counterbore to remove wear marks. A light hand polishing or blending, to remove sharp edges is sufficient prior to plating.

c. Insulate lock plate so that only the counterbore and undercut are plated.

d. Copper plate counterbore to a maximum thickness of 0.002 inch as shown in figure 6-272.

e. Finish grind the part to dimension A, which is 4.0445 - 4.0455 inches. After the final grinding operation, the counterbore will have a mottled appearance which will be mostly steel with small areas of copper. This condition is acceptable since it is not a running surface and the copper is used only as a filler for wear pockets.

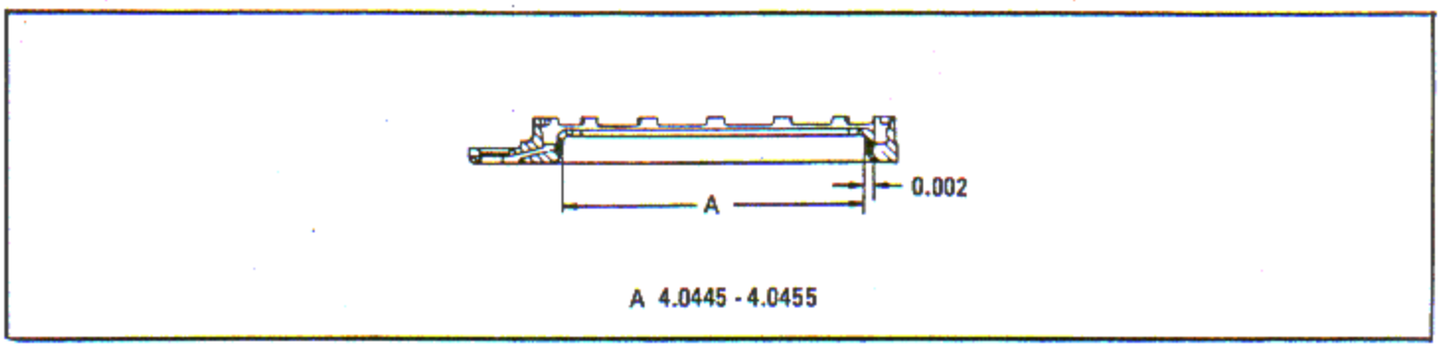

Figure 6-272. Knuckle Pin Lock Plate

f. The final grinding operation will not remove the copper plate from the undercut but, since its presence has no adverse effect on the operation of the part, it need not be removed from this location.

6-814. VALVE TAPPET GUIDES, CHROME OR COPPER PLATING FOR OVERSIZE. Valve tappet guides may be chrome or copper plated on the piloting diameters to increase the valve guide to crankcase fit. If the guide diameter is to be increased not more than 0.0025 inch (0.00125 inch per side), it is acceptable to use copper plate. For larger diameter increases, plate with chrome, which may be used to increase the finished dimension diameter to a maximum of 0.010 inch (0.005 inch per side).

6-815. When guides are copper plated, the plate can run into the fillet radius between the piloting diameter and the flange. See figure 6-273. Plate to the finished size, not to exceed a plate thickness of 0.00125 inch.

NOTE

It is permissible to copper plate the guide all over except the sides of the fork and the guide OD.

6-816. When guides are chrome plated, do not plate into the fillet radius under the flange. See figure 6-273. Plate to approximately 0.010 inch over the final oversize diameter. Remove excess material by grinding in accordance with the following. The maximum finished thickness of chrome is 0.005 inch.

a. Slip the plated guide over a taper mandrel and expansion bushing. Expand the bushing to a snug fit inside the guide.

b. Mount the mandrel and guide assembly between centers of a suitable plain cylindrical grinder.

c. Mount a Norton grinding wheel (Cat. No. 37C500-I9E, Norton Co., Worcester, Mass.) or equivalent, on the machine. Adjust the machine for a work speed of approximately 150 rpm and a grinding wheel speed of approximately 11,000 surface feet per minute.

d. Using a suitable coolant and a light hand feed, grind the OD of the guide to the desired oversize. Blend all sharp edges.

e. The newly ground surface B must be square to the flange within 0.002 inch full indicator reading. The required surface finish is 20 microinches rms or better.

f. Vibro-etch the guide oversize on the anti-flange end of the guide as shown.

6-817. VALVE TAPPET GUIDE, PLASMA SPRAY COATING FOR OVERSIZE. To obtain the desired oversizes, plasma spray coating may be used in lieu of the procedure outlined in paragraph 6-814.

a. Apply plasma spray coating as specified in paragraph 6-914. Apply Metco 450 nickel aluminum powder to a minimum thickness of 0.005 inch and overspray as required to facilitate machining to finish diameter.

b. Finish machine the guide to the dimension given in figure 6-273.

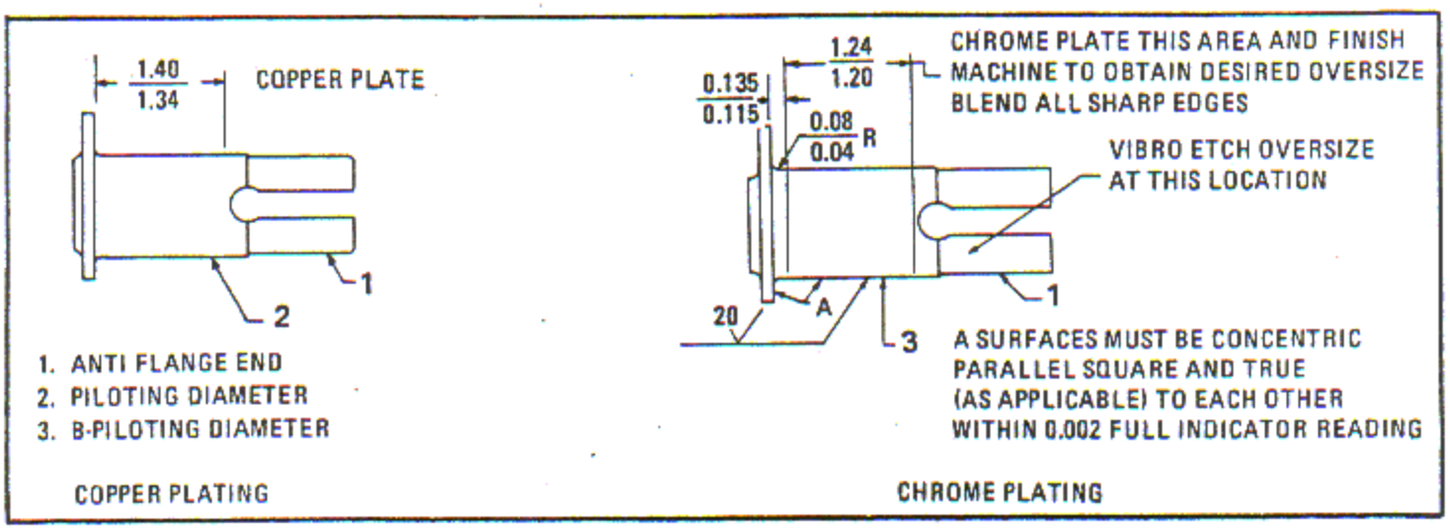

Figure 6-273. Copper Plating and Chrome Plating Valve Tappet Guide

6-818. PISTON PINS, SALVAGE BY COPPER PLATING THE PISTON PIN PLUGS. Piston pins which have a worn ID at the piston pin plug location may be salvaged by copper plating the OD of new plugs a maximum of 0.001 inch thickness to obtain a tight fit of 0.001 - 0.003 inch.

CAUTION

It is not permissible to salvage worn plugs by plating since this will result in additional stress in the plug.

6-819. FRONT AND REAR MAIN BEARING SALVAGE BY COPPER PLATING. Copper plating is permissible on crankshaft main bearing inner races, but prohibited on propeller shaft ball or roller bearings. Copper plate the main bearing inner race ID up to 0.001 inch maximum thickness. The inner race ID or OD shall not run out more than 0.0005 inch full indicator reading. Bearing must be heated to 135°C (275°F) for five hours in oil after copper plating.

6-820. SUPERCHARGER DRAIN VALVE RETURN TUBE, RECONDITION BY CHROME AND/OR COPPER PLATING. The small end of the supercharger drain valve return tube assembly (the end which fits into the drain valve body) may be reconditioned by chrome plating its OD to a maximum thickness of 0.005 inch as in figure 6-255. The large end of the tube assembly (the end which mates with the supercharger rear housing) may be chrome or copper plated on its OD to a maximum thickness of 0.005 inch as shown. See paragraph 6-865 for chrome plating and paragraph 6-881 for copper plating.

6-821. CAM SUPPORT ASSEMBLY RECONDITIONING BY PLATING. The ID of a support which exhibits only minor wear or fretting corrosion may be reconditioned by plating that surface with copper to a maximum thickness of 0.002 inch. Finish machining is not required in this case. More serious damage to the ID requires rework of the surface in accordance with the procedure described below.

a. Mount the support ensuring that surfaces A and B run concentric and true within 0.001 inch FIR prior to machining. See figure 6-274.

b. Using a tool with a 0.003 - 0.006 inch end radius, finish machine surface C to 8.227 - 8.228 inches diameter. Allow the tool to approach surface B within 0.060 - 0.070 inch. Surface finish of surface C must be 50 microinches rms or better.

c. Nickel plate the machined surface in accordance with paragraph 6-876. Overplate as required to ensure full cleanup on remachining. Ensure that no plating is deposited on surface B or on the adjacent fillet radius.

d. Remount the cam support in accordance with the requirements of step a. above, and machine to the diameter and surface finish shown in figure 6-274. Imperfections at the edges of the plating are acceptable provided they do not extend more than 1/16 inch from the edge.

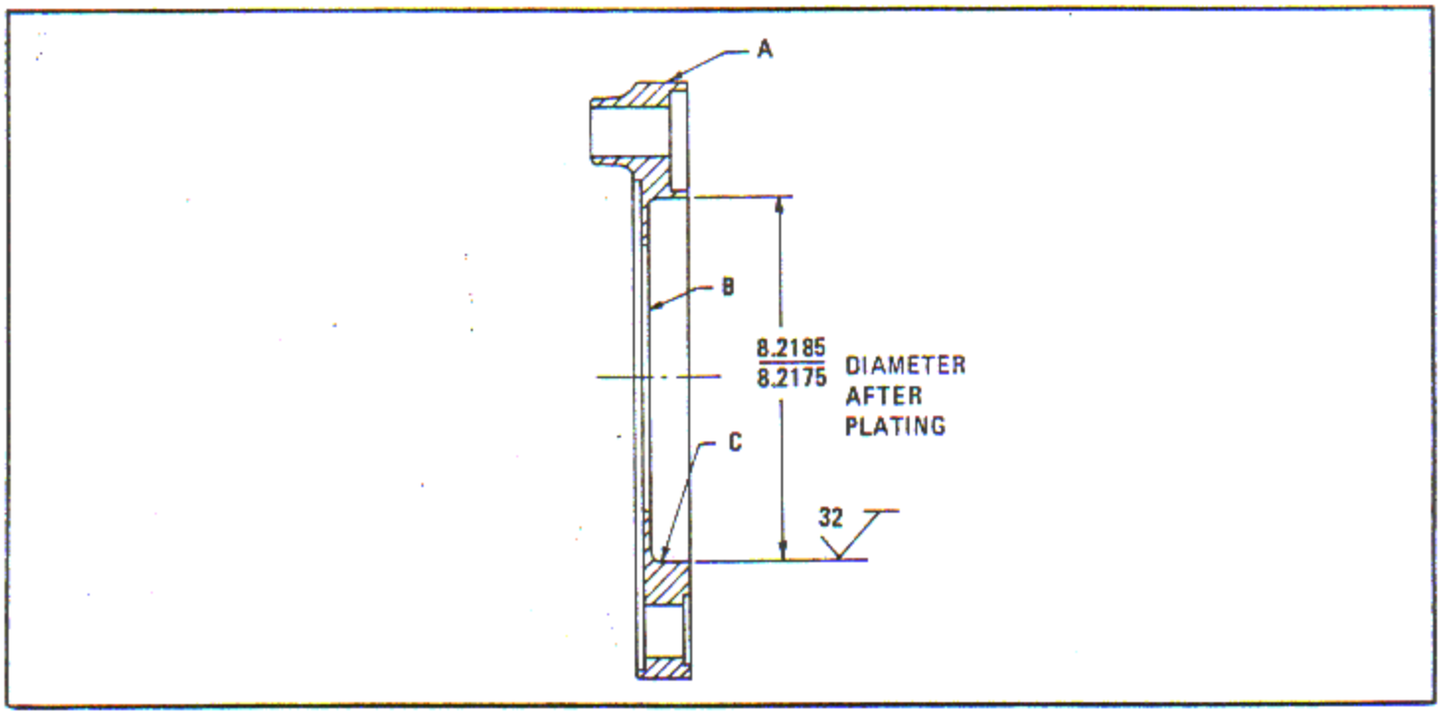

Figure 6-274. Machining Cam Support After Plating

e. Ensure all oil supply passages are thoroughly cleaned upon completion of the reconditioning procedure.

6-822. CAM SUPPORT ASSEMBLY, PLASMA SPRAY. The following procedure may be used as an alternate to the electroplating repair of the support.

a. Machine surface C of figure 6-274 to remove evidence of wear to a maximum of 0.020 inch above the original ID. Maintain concentricity and squareness limits within 0.0002 inch full indicator reading.

b. In accordance with current standard procedures, plasma spray the ID surface, using Metco 450 or 404, with sufficient buildup to allow for finish grinding. Ensure adequate masking so that there is no spray overrun into the oil passages and reliefs.

c. Finish grind to original drawing dimensions and a 32 microinch rms finish.

6-823. SUPERCHARGER CLUTCH OIL CONTROL VALVE SLEEVE PLATING. Plate only those areas that are shown shaded in figure 6-275. Type and thickness of plating will depend upon the diameter of the recess in the supercharger rear cover.

a. Copper plate to a maximum thickness of 0.001 inch.

b. Chrome or nickle plate a sufficient thickness to allow machining to final size.

c. Machine the chrome or nickle plated OD surfaces to 1.0100 - 1.0104 inches or to 1.0200 - 1.0204 inches as necessary to provide a 0.0000T-0.0012T fit with the valve sleeve recess in the supercharger rear cover.

d. Remove any excess plating and assure that all oil passages are clean.

6-824. IMPELLER SHAFT SPLINES FLASH TIN PLATING. Remove old plating from impeller shaft splines with standard stripping procedure. Refer to paragraph 6-892. Flash tin plate splines 0.0002 - 0.0005 inch thick in accordance with instructions in paragraph 6-892.

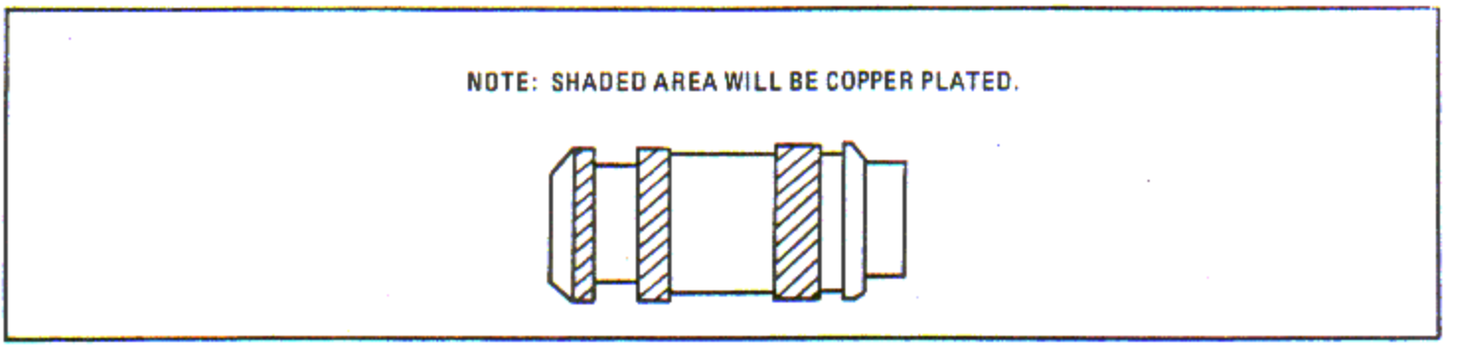

Figure 6-275. Copper Plating Supercharger Clutch Oil Control Valve and Pin Assembly

a. If the required fit cannot be obtained between the impeller shaft and the impeller, the shaft splines may be plated with silver or tin up to a maximum dimension of 1.883 inches measured over pins of 0.0909 inch diameter. Plating shall be in accordance with NARF JAX LPS 3-70.

b. A copper flash of 0.0003 inch maximum thickness shall be applied to the base metal if the splines are to be silver plated.

6-825. SUPERCHARGER IMPELLER SPLINE SILVER PLATING. Supercharger impellers that have excessive spline wear may be reconditioned by silver plating the ID to service limits of 1.6142 - 1.6172 inches. Prior to plating the following procedure is recommended.

a. Using two 0.0708 inch diameter wires contacting splines diametrically opposed, determine the between wire dimension.

NOTE

Due to the tooth form of the impeller splines, a ratio of plate thickness to between wire dimension has been established. For every 0.001 inch of silver plate thickness, the between wire dimension will decrease 0.004 inch.

b. The required silver plate thickness is calculated as follows:

Example:

Measured between wire dimension	1.6272 inches
Service diametrical between wire dimension limit after plating	1.6142 - 1.6172 inches
Required silver plate thickness	$\frac{1.6272 - 1.6152}{4} = 0.003$

c. To recondition an impeller which is 0.012 inch oversize (as is the above example) will require approximately 0.003 inch silver plate.

6-826. Silver Plate.

a. Degrease impeller in a vapor degreaser.

b. Vapor blast ID spline of impeller.

c. Rinse impeller in warm water and blow dry.

d. Insulate steel locating pins with wax.

e. Scrub ID spline of impeller with pumice, Federal Specification SS-P-821 and rinse thoroughly in cold water.

f. Position impeller on fixture which provides accommodation for center anode.

NOTE

Do not insert anode in spline ID at this time. Refer to step k.

g. Immerse impeller in nitric-hydrofluoric acid solution for eight minutes. Use solution No. 31 as specified in paragraph 6-950. Agitate occasionally to release adhering gas bubbles.

h. Thoroughly rinse impeller and fixture to prevent possible solution entrapment.

i. Immerse impeller in zinc immersion solution, (solution No. 15) employing constant agitation for 30 seconds. Solution temperature should be less than 27°C (80°F). Rinse impeller in cold water.

j. Immerse part in nitric-hydrofluoric acid solution until zinc layer is removed. Zinc should be stripped in approximately 30 seconds.

NOTE

Strip tank make up is identical to etch tank, but separate baths should be used to prevent contamination of the etch solution.

k. Thoroughly rinse impeller and fixture to prevent solution entrapment. Position ID anode in spline.

l. Immerse impeller in zinc immersion solution, employing constant agitation for 30 seconds. Rinse in cold water and spray rinse splines and faces.

m. Immerse impeller in silver strike solution (Solution No. 14) making anodic and cathodic contacts prior to entry, and plate at 200 amperes per square foot (17 amperes per part) for ten seconds. Lower the current to 2.2 amperes per part and maintain for 80 seconds.

n. Immerse the impeller in silver plate solution (Solution No. 26) making anodic and cathodic contacts prior to entry, and plate using the ID circuit at 20 - 25 amperes per square foot (2.2 amperes per part). At the same time, use the OD circuit for approximately three minutes to protect the aluminum surfaces from excessive etching in the alkaline silver solution.

NOTE

Exact time and current density required to plate the desired silver plate thickness on impeller in order to obtain authorized service limit of 1.6142 - 1.6172 inches for between wire size, will be determined by operational shop experience.

o. Rinse impeller in cold water and remove from fixture.

p. Rinse impeller in hot water and blow dry.

q. Insulate impeller splines and 1/4 inch of flange faces adjacent to spline with three coats of wax.

r. Immerse impeller in a 50 per cent solution of nitric acid and water until silver on vanes and web of impeller is removed.

s. Rinse impeller in cold water, then hot water and blow dry.

t. Place impeller in a vapor degreaser to remove wax.

CAUTION

Use extreme care not to mar finish plated splines.

u. Measure the spline diametrical dimension between wires after plating to ensure part meets requirements.

6-827. MASTER ROD BEARING, LEAD-TIN PLATING. The ID of master rod bearings may be selectively lead-tin plated to a thickness of 0.00075 - 0.00125 inch. Refer to the following list for the finished ID dimension and to paragraph 6-862 for procedure.

a. When one third of the required plating cycle has been completed, remove the bearing from the solution. Rinse and wipe the bearing on the plated surface with a clean nylon or other lint free material. Return the bearing to the plating solution.

b. Repeat the rinse and wipe operation at the two thirds cycle time.

ID Bearing Size	Finished ID
Std	3.2545 - 3.2550 inches
-0.002 inch	3.2525 - 3.2530 inches
-0.004 inch	3.2505 - 3.2510 inches
-0.006 inch	3.2485 - 3.2490 inches
-0.008 inch	3.2465 - 3.2470 inches
-0.010 inch	3.2445 - 3.2450 inches

6-828. PLATING INFORMATION.

6-829. GENERAL. Plating by electrodeposition is essentially an electro-chemical process whereby a metallic coating is deposited on an object, the surface of which is electrically conductive. The process (electrolysis) transfers metal particles (ions) through a plating bath (electrolyte) from a soluble anode to the work piece which acts as the cathode. When an insoluble anode is used (chrome plating with lead anodes) the metal received by the cathode is furnished from the dissolved metal compounds in the elctrolyte. Electrodeposition is accomplished by furnishing sufficient voltage and energy to overcome the resistance in the system and transfer the plating metal to the work piece. Voltage is furnished by a direct current generator or rectifier. To obtain the desired characteristics in the metallic deposits such as hardness, ductility, brightness and crystalline dimensions, the current density, addition agents, solution concentration and bath temperature are the controlling factors. Electroless plating is deposition of a metallic coating on an object by chemical reduction of the metallic ions in the solution.

6-830. CLEANING. Prior to any plating, the work piece must be free from soil or undesirable matter. Depending on the type of soil to be removed from the metal, the cleaning method may be solvent, acidic, mechanical, alkali soak or alkali electrolytic. The surface cleanliness required of the work piece prior to plating is of paramount importance as it directly affects the adhesion of the metallic deposit.

NOTE

Cleaning of the work piece immediately prior to the plating cycle shall be termed "Cleaning Proper", while the initial removal of soil and scale from the work piece will be titled "Pre-cleaning."

a. The solvent type degreasing pre-cleaner, as employed in conjunction with the simple spray booth, dissolves surface grease and oil by dilution. The booth should be equipped with a fire extinguishing system when flammable solvents are used.

b. Pre-cleaning by vapor degreasing using a trichlorethylene or perchlorethylene type of material is advantageous in that oil and grease are removed from the surface of the work piece and carried to the bottom of the unit by the condensed vapor. Since only the solvent will vaporize, the solvent recondensing upon the work is clean and uncontaminated. The work piece is removed from the tank in a dry condition.

c. The pre-cleaning removal of oxides and scales on the surface of the work piece prior to plating, caused by welding or heat treat, is usually accomplished with one or more of the following acids: Sulfuric, hydrofluoric and hydrochloric. The work piece is cleaned in the acid bath where the acid attacks the scale and exposes the clean metal. An increase in acid concentration and temperature of the bath supplemented by agitation of the work piece will usually decrease the time required to complete the reaction. To reduce the rate of attack of the pickling acid on the clean metal when non-uniform scale deposits are encountered, an inhibitor is added to the acid. A well chosen inhibitor will have little effect on the rate of descaling, but will form a protective film on the clean surface.

d. Inhibited acid cleaning should be followed by a thorough electro-cleaning to remove any inhibitor from the surface of the work piece. The presence of any inhibitor film may affect the adherence of the plated metal or the normal operation of the plating bath.

e. Mechanical pre-cleaning, such as sand blasting, is generally used to remove heavy scale deposits with a consequent reduction of time in the pickling bath. In grinding, rough metal surfaces are smoothed with an abrasive wheel; buffing and polishing usually follow to obtain the desired finish.

f. Cleaning proper, using alkaline cleaning solutions, consists of soaking the work piece in a hot, 77 - 100°C (170 - 212° F), alkaline solution. Incorporating agitation with the soaking will help loosen and remove dirt and soil.

g. Electro-cleaning, employs a carefully composed alkaline solution in which the work piece serves as either the anode or cathode. When a current is passed through the solution, soil will be removed by the agitation and scouring effect of the oxygen or hydrogen bubbles being liberated from the work piece. Electro-cleaning is faster and will remove caked dirt better than the alkaline soak method. This process may be operated at a lower temperature and a lower alkali concentration than other alkaline soak cleaning methods.

h. Reverse current (anodic) cleaning is usually employed when electro-cleaning steel parts, prior to plating. Hydrogen embrittlement of the part is avoided as only oxygen is liberated at the surface of the work piece and positive charge dirt particles are repulsed from the work piece surface.

i. When electro-cleaning non-ferrous metals such as brass or zinc, the work piece should not be subject to reverse current for more than a few seconds. Either cathodic or cathodic-anodic cleaning is therefore employed. In cathodic cleaning, however, the non-ferrous metal ions and positive charged soaps are attracted to the cathode and plated out as a loose smut on the surface of the work piece. To eliminate this smut, cathodic-anodic cleaning may be employed. The work piece is cleaned with direct current and reverse current applied for a few seconds. The reverse current removes any smut or films adhering to the part.

6-831. RACKING. The primary purpose of the plating rack is to hold the work piece in the electrolyte. Current may be supplied to the work piece either by the rack or a wire lead. Racks are usually designed for a specific application, although many jobs may be handled with a simple copper wire hook. Spacing of the part is important, as parts too closely spaced will tend to shield one another. This will produce thinly plated areas.

a. In large tanks where the solution or part is not agitated and where there is sufficient space available, the work piece should be at least six inches from the bottom and one and one half inches below the surface. Where agitation is present the work piece should be approximately two and one half inches below the surface.

b. Design of the rack should provide for the following objectives, correct positioning of the work piece in the solution to prevent gas bubbles from being trapped in pockets of the work, good electrical contact, keeping plating surface correctly located with respect to the anode, allowing the largest number of parts to be efficiently plated, eliminating or minimizing loss of the plating solution through drag-out and incorporate simplicity of design.

c. On sharp points or edges where there may be a tendency toward excessive build-up or burning due to a heavy plating action in a very limited area, a thief or burner bar is attached to the rack and positioned near the edge or point to reduce the current density in that area. Conversely, to plate a tubular or deeply recessed work piece, auxiliary anodes are employed inside the tube or recess, respectively. These additional anodes are insulated from, but attached to the rack, thereby maintaining their position with respect to the work piece.

6-832. STRIPPING. Before any work piece can be replated, it is necessary to strip all electrodeposits from the basis metal. The type of solution necessary to accomplish this removal will depend upon the specific deposits. In any case the first step will be to degrease the work piece in a vapor degreaser, to expose the area being stripped and to prevent contamination of the stripping bath. Procedures and solutions required for a specific strip are referenced in the applicable plating paragraph.

6-833. INSULATING. The selection of suitable insulating or masking materials will require consideration of the following factors:

a. Operating temperature of solutions involved.

b. Length of time the part will be immersed in various solutions.

c. Type of solutions the insulated part will be immersed in.

d. The insolubility of insulating materials in solution.

e. Adherence of insulating material to the part being plated.

f. Possible staining of the part's surface by the insulating material.

g. Ease of application and removal of insulating material.

h. The number of parts to be plated.

i. The size and shape of the surface to be insulated.

j. When employing lacquer as the insulating material the drying time and temperature are of interest.

6-834. INSULATING MATERIAL. The most common materials employed for insulation are waxes, lacquers, tapes of various types and suitable rubber-like materials such as neoprene. Wax is a suitable insulating material for many solutions such as cadmium or lead, where the bath is operated at room temperature or where it does not exceed 49° C (120° F). The wax must also be insoluble in the various solutions it will be immersed in. To remove the wax, the work piece need only be heated slightly above the melting point of the wax and it will drip off. It can then be collected and reused.

a. Lacquers are utilized for solutions operated at higher temperatures with some capable of withstanding 93° C (200° F) for a limited period of time. If applied to an ID surface, the lacquer will have a tendency to shrink and proper adherence will not be obtained. An air dry lacquer should set within 20 - 30 minutes and be ready for use after two hours. An oven bake lacquer is usually required for solutions operated in the 88 - 93° C (190 - 200° F) range, such as electroless nickel. Care should be taken to see that neither the lacquer nor wax produces staining on the surface of the work piece.

b. Generally, removal of the lacquer may be accomplished by immersion in a hot alkaline cleaner and then subjecting the insulated area to an air blast. Where a large number of similar parts will be plated it will be advantageous to provide rubber type insulating masks to reduce the insulating operation time.

6-835. ANODES. The anode used for electrodeposition usually consists of the metal being deposited and it should be as pure as possible. Insoluble anodes may also be employed. An example would be the lead or lead alloy anodes utilized in chromium plating. An impure anode may cause a rough and unsatisfactory deposit. The anode is attached to a hook having a square cross section and so arranged that the edge will dig into the anode bar and provide a good electrical contact. The ratio of the anode area to the work piece is important and varies with the different baths. In general it should be approximately 1:1.

6-836. BATHS. The bath or electrolyte is a salt solution of the plating metal and should be maintained at a uniform composition by analysis. This will tend to eliminate variations in the plated finish of the work piece with a related saving of time and material. The analysis of the various constituents in a plating bath in most cases can be accomplished by the volumetric method, the frequency of which will depend upon the specific constituent being analyzed. A suitable control laboratory should be provided for the analysis.

6-837. The specific plating instructions, solution content and control for silver, lead-tin, chromium, electroless nickel, nickel (sulfamate bath), and cadmium, will be discussed in detail under the applicable paragraphs of this section.

6-838. BAKING. Internal stresses in the electrodeposit as well as hydrogen absorbed by the work piece can be relieved and removed, respectively, by baking.

a. The time and temperatures required for stress relief and elimination of hydrogen embrittlement will depend upon the specific metal, the type of treatment it has received prior to plating, such as shot-peening or case hardening, size of the work piece and the amount of hydrogen that it has absorbed.

b. In general, two to three hours at 177 - 191° C (350 - 375° F) after plating are sufficient, except for carburized parts, which receive 135° C (275° F) for five hours. Applicable silver plated steel parts, incorporating a nickel strike, are subject to a 497 - 522° C (940 - 960° F) bake that will produce blistering in areas having poor adherence.

6-839. INSPECTION. Prior to electrodeposition, the work piece should be visually inspected for cleanliness and removal of all previously plated deposits. A check for demagnetization should also be made. All magnetized parts should be demagnetized.

a. Post plating inspection should determine the acceptability of the plate thickness and the presence of a smooth, continuous, adherent, uniform plate, free from pin holes, porosity, blisters, nodules and other harmful defects.

b. A fluorescent penetrant inspection procedure may be employed to indicate areas of poor adherence that extend to the plated edge or surface of the compound.

6-840. SHOP LAYOUT. The base floor in the plating shop is usually concrete. It is required to support the plating tanks and other related equipment as well as industrial hand trucks. The concrete should be capped with an acid and alkali proof tile or suitable material and sloped into drainage troughs to permit hosing.

WARNING

Wooden floor racks should be positioned in front of tanks where wet floors are likely to be encountered.

6-841. TANKS. The most common tank materials are wood, glass, steel, ceramic and plastic. Selection of the tank material will depend upon its resistance of the specific solution it will contain and the temperature at which the bath will operate. Tank size will depend upon the dimensions of the largest work piece to be processed. The use of steel for ease of construction, low cost and high strength is recommended, as the tank can be lined with a suitable material for chemical resistance.

a. Tank drain valves, located at the bottom of the tank, should be protected against accidental discharge and lead into a drainage system. Pipes used for drainage should be of silicon iron, thereby reducing corrosion.

b. Steam heating coils immersed in the plating solution will provide the heat necessary to obtain a specific temperature for efficient bath operation. Depending on the solution, coils may be either lead or stainless steel and should be positioned at the side of the tank. This will make recovery of a dropped work piece easier, provide better circulation of the bath and facilitate cleaning of the tank. Electric heating units can also be used to provide the necessary bath temperature.

c. Acid baths will require natural rubber or vinyl lining depending upon the specific acid, while plain unlined steel tanks are suitable for alkali solutions. Flat, mild steel plate can be used for tank fabrication with integral piece construction desirable at the sides.

d. When numerous small parts are to be plated (nuts, bolts or small stampings), racking and unracking can be eliminated by rotary barrel plating. A horizontal perforated cylinder containing the work is immersed in the plating bath and rotated.

e. The oblique barrel method may be used if the work has a tendency to catch in or slip through the perforated barrel. This method consists of a barrel type tank, positioned to rotate at 45 degree angle, containing the plating solution, an anode and the work to be plated.

6-842. ELECTRICAL SOURCES. The electrical current necessary for electrodeposition may be supplied by either a motor generator or rectifier. Varying with the type of material, rack work will generally require approximately six volts, while 12 - 15 volts or more are necessary for barrel type plating.

a. The selenium rectifier is preferable for a small plating layout, having characteristics of lower initial cost, efficiency under variable loads (as in the intermittent use of plating tanks) and flexibility. Position the rectifier close to the tank to reduce power losses.

b. The control panel of each rectifier should incorporate a powerstat control, voltmeter and ammeter. A portable current density meter should be available to eliminate the necessity of calculating the plating area of the work piece.

6-843. VENTILATION AND SAFETY. Fumes and vapors rising from most preparatory (pickling, degreasing) and plating solutions tend to produce atmospheric contamination. Appropriate methods to prevent the excape of these toxic and corrosive fumes into the plating room should be provided.

a. The volume of fumes rising from the solution may be decreased by the use of inhibitors in the bath or plastic balls on the surface. Removal of the vapors can be accomplished by overhead or lateral type hoods. Another method employs a screen of air, blown across the solution surface from a slotted duct. The air velocity is such that it engulfs and transports the vapors toward the lateral exhaust hood.

WARNING

Observe the necessary precautions when handling acids.

b. Although exhaust systems reduce or eliminate the daily concentration of inhaled vapors, large concentrations produced while mixing solutions or cleaning tanks will require a suitable respiratory

protective device. Appropriate protective clothing, such as rubber gloves, aprons and goggles will minimize possible injury from chemical burns while handling or using chemicals.

6-844. RINSING OPERATION. The various operations and procedures that follow, reference rinsing operations consisting of hot and cold water. Cold water temperatures should be maintained at 10 - 32°C (50 - 90°F). Hot water temperatures should be maintained at 82 - 100°C (180 - 212°F).

6-845. AMS REFERENCE NUMBERS FOR PLATING.

Type of Plating	AMS Number
Cadmium	2400J
Nickel	2403C
Chromium (Hard)	2406B
Tin	2408A
Silver (Nickel Strike, High Bake)	2410B
Silver (Copper Strike, Low Bake)	2412B
Lead	2414
Lead-Indium	2415B
Copper	2418A
Silver (Steel Backed Bearings)	4815C

6-846. SILVER PLATING.

6-847. GENERAL. This instruction will provide the following: A general procedure for the electrodeposition of silver over the appropriate preliminary strikes (nickel or copper with silver) on a steel or stainless steel surface from a silver cyanide solution, a silver plating procedure for aluminum employing a zincate treatment, and a silver plating procedure for bronze from a silver cyanide bath.

6-848. STRIPPING PROCEDURES. Before replating any engine component, it is necessary to strip all electrodeposits from the basis metal. The following procedures are employed to strip the deposits usually associated with silver plate.

NOTE

Stripping procedures for copper, lead-tin, lead or lead-indium are contained in their respective sections.

6-849. SILVER STRIP (SOLUTION NO. 4).

a. Degrease the part in a vapor degreaser, if necessary.

b. Immerse the part in the silver stripping solution. Electrolyze the part at a low voltage (2 - 3 volts) to provide no more than 25 amperes per square foot of part until all silver plate is removed.

c. Rinse the part in cold water, then in hot water and blow dry.

6-850. NICKEL STRIP (SOLUTION NO. 7).

a. Degrease the part in a vapor degreaser, if necessary.

b. Immerse the part in nickel stripper, Enthone Metal Stripper A 71 - 77°C (160 - 170°F) until all the nickel has been removed.

c. Rinse the part in cold water, then in hot water and blow dry.

CAUTION

The part should be thoroughly dried before immersing in nitric acid to avoid dilution of the acid, and in turn prevent pitting of the basis metal. This is especially true of steel parts, such as steel backed bearings.

NOTE

If the nickel stripper is not available, then concentrated nitric acid (42 degrees Baume') Solution No. 8, should be used for stripping the nickel strike.

d. Inspect the part for any evidence of excessive roughness, corrosion, pitting, cracks or any other harmful defects which will affect the operation of the component in an engine. Do not replate discrepant parts.

e. If the part is not to be plated immediately, slush with corrosion preventive compound, Military Specification MIL-C-6529, to prevent corrosion.

6-851. SILVER PLATING PROCEDURE (SOLUTION NO. 26).

NOTE

In processing the part, full current should be applied prior to immersing the parts in the silver strike and silver plate baths. This will prevent the formation of immersion silver plate which may result in a poor bond.

a. Demagnetize the part if any sign of residual magnetism is evident from previous reconditioning operations.

b. Degrease the part in a vapor degreaser.

c. Place the part on a suitable rack or hook.

d. Electroclean the part for 90 - 120 seconds in anodic alkaline cleaner, (Solution No. 36).

e. Rinse the part in warm water.

f. Immerse the part in a 17 per cent solution of muriatic acid, (Solution No. 30), for 30 - 60 seconds.

g. Rinse the part in cold water, then in hot water and blow dry.

h. Insulate the part if/as required.

i. Electroclean the part in anodic alkaline cleaner for one and one half to two minutes.

NOTE

If wax has been used for insulation purposes and the anodic alkaline cleaner cannot be utilized, scrub the surfaces to be plated with pumice, Federal Specification SS-P-821 and alkaline soap solution (Solution No. 38) until no water breaks occur after rinsing off the pumice.

j. Rinse the part in warm water.

k. Immerse the part in a 17 per cent solution of muriatic acid (Solution No. 30) for 30 - 60 seconds.

l. Rinse the part in cold water.

NOTE

At this step, either the copper or the nickel strike may be deposited.

6-852. COPPER STRIKE (SOLUTION NO. 10).

a. Immerse the part for five to ten seconds in sodium cyanide solution, (Solution No. 39).

b. Immerse the part in copper cyanide strike solution and agitate the part for a few seconds before applying current. Plate at 15 amperes per square foot of area to be plated for five minutes.

NOTE

Agitation is recommended during the copper plating cycle and may be accomplished by use of a moving cathode bar, circulation of the solution or rotation of the part being plated.

c. Rinse the part in cold water.

6-853. NICKEL STRIKE (SOLUTION NO. 12).

NOTE

If the basis meter (steel) has a high carbon content on the surface to be plated (more than 0.30 per cent carbon), an electrolytic sulfuric etch and subsequent cold rinse should be performed prior to the nickel strike.

a. Immerse the part in a nickel strike solution at room temperature. Plate at 15 amperes per square foot of area to be plated for five minutes. Agitate the part while plating, without breaking contact, to release adhering air bubbles.

b. Rinse the part in cold water.

c. Immerse the part in sodium cyanide solution, (Solution No. 39) for five to ten seconds.

d. Immerse the part in silver cyanide strike solution making anodic and/or cathodic contacts prior to entry, and apply full current. Plate at 15 amperes per square foot of area to be plated for one and one half to two minutes. Agitate the part while plating, without breaking contact, to release adhering air bubbles.

e. Immerse the part in the silver plating solution, (Solution No. 26) making anodic and/or cathodic contacts prior to entry, and apply full current. Plate at 20 amperes per square foot in a still tank or at 40 amperes per square foot when the part to be plated is on a rotating fixture. Do not break contact at any time during the actual plating operation.

NOTE

Agitation is recommended during the silver plating cycle and may be accomplished by use of a moving cathode bar, circulation of the solution, or rotation of the part being plated. Turn the part as necessary to obtain uniform thickness of the plate provided the part is not being rotated mechanically.

f. Rinse the part in cold water, then in hot water and blow dry.

g. Remove the part from the rack or hook.

h. Remove the insulation, if applied.

NOTE

Remove lacquer by immersing the part in a hot soap cleaner tank until the laxquer no longer adheres to the part. The lacquer can then be blown or scraped off where necessary. Remove wax by degreasing.

6-854. COPPER STRIKE BAKE PROCEDURE. Heat the part for not less than two hours at 163 - 250°C (325 - 482°F).

6-855. NICKEL STRIKE BAKE PROCEDURE.

NOTE

The rigidity imparted to the plate by the thickness of silver in the plated condition tends to abort any blistering during the baking operation. It is therefore recommended that the part be semi-finish machined before the baking operation. Leave 0.005 - 0.010 inch additional thickness of silver for finish machining. This will allow the high temperature bake to effectively indicate poor bond.

a. Heat the part at 504 - 516°C (940 - 960°F) for not less than 20 minutes and not more than 60 minutes.

b. Above 204°C (400°F) the heating and cooling medium shall be a neutral reducing atmosphere or a neutral or non-oxidizing salt bath.

c. The total elapsed time during the heating and cooling cycle above 204°C (500°F) and while held at 504 - 516°C (940 - 960°F), bake period shall not exceed seven hours.

d. If a non-oxidizing salt bath is used, place the part on a suitable hook and immerse in the molten salt. Bring to heat and hold for the specified time.

e. Remove the part from the bath and quench in hot water.

NOTE

Sufficient molten salt will remain on the part to protect it from the atmosphere while transferring it from the bath to the quench.

f. Poor adherence of the plate to the basis metal will be revealed by blistering on the surface, however, blistering will not occur on edge surfaces.

g. To expose a poor bond condition on the edge surfaces of a plated part as a crack or void in the laminar boundary between the basis metal and plate, submit the part to fluorescent penetrant inspection after finish machining.

6-856. DISCOLORATION OR SCALE. Silver plated parts which show a discoloration or scale from the annealing operation, that will not be removed by subsequent machine operations, will be treated as outlined in the following steps a through d.

a. Degrease the part and immerse in an anodic cleaner, (Solution No. 36) for one and one half to two minutes. Do not use current.

b. Rinse the part in hot water and immerse it in 50 per cent muriatic acid, Federal Specification O-A-86, for two to three minutes.

c. Rinse the part in cold water and immerse it in sodium cyanide solution (Solution No. 39) for 60 - 90 seconds.

d. Rinse the part in cold water, then in hot water and air blow dry.

e. Inspect the part for a smooth, continuous, adherent, uniform plate, free from pin holes, porosity, blisters, nodules, pits and other harmful defects detrimental to the performance of the part. Check the bond by the fluorescent penetrant inspection method.

NOTE

Since parts that have been silver plated over a copper strike cannot be baked at 150°C (950°F) to determine area of poor adherence, shot-peening may be employed. This method, while acceptable, is not as rigorous and positive a test as the bake which can only be employed on nickel strike, silver plated parts. Refer to paragraph 6-860 for bond testing shot-peening operation.

f. Slush the part with corrosion preventive compound, Military Specification MIL-C-6529.

6-857. SILVER PLATING PROCEDURE (STAINLESS STEEL).

a. Degrease the part in a vapor degreaser.

b. Place the part on a suitable rack or hook.

c. Electroclean the part in anodic alkaline cleaner (Solution No. 36) for one and one half to two minutes.

d. Rinse the part in warm water and then immerse it in a 17 per cent solution of muriatic acid (Solution No. 30) for 30 - 60 seconds.

e. Rinse the part in cold water.

f. Rinse the part in hot water and blow dry.

g. Insulate the part if/as required.

h. Electroclean the part in anodic alkaline cleaner for one to one and one half minutes.

i. Rinse the part in warm water.

j. Immerse the part in a 17 per cent solution of muriatic acid for 30 - 60 seconds.

k. Rinse the part in cold water.

l. Immerse the part in Wood's nickel strike (Solution No. 13) and plate at 70 amperes per square foot for one and one half to two minutes.

m. Rinse the part in cold water.

n. Immerse the part in the sodium cyanide solution (Solution No. 39) for five to ten seconds.

o. Immerse the part in the silver strike solution (Solution No. 14) and plate at 15 amperes per square foot for one and one half to two minutes. Have the contacts on the parts before they are immersed in the solution.

p. Immerse the part in the silver plate solution (Solution No. 26) and plate at 20 amperes per square foot (still tank) until the appropriate thickness is obtained.

q. Rinse the part in cold water followed by a hot water rinse and blow dry.

r. Remove the part from the rack or hook.

s. Remove the insulation if applied at the previous step q.

t. Bake the part at 504 - 516°C (940 - 960°F) for not less than 20 minutes and not more than one hour. Temperature of the part shall not be over 204°C (400°F) for more than seven hours. Above 204°C (400°F) the heating and cooling medium shall be a neutral or reducing atmosphere.

u. Inspect the part for a smooth, continuous, adherent, uniform plate, free from pin holes, porosity, blisters, nodules, pits and other harmful defects.

v. Slush the part with corrosion preventive compound, Military Specification MIL-C-6529.

NOTE

After basis metal has been plated with silver to a considerable thickness (over 0.035 inch) and will subsequently be machined to size after a 504 - 516°C (940 - 960°F) bake, there is a possibility that inherent rigidity of silver plate may limit blistering and thereby permit areas of poor adherence to escape detection during visual inspection. It is therefore recommended that a semi-machining operation be performed prior to the bake. This will decrease the silver thickness and allow the high temperature bake to effectively indicate poor adherence.

6-858. SILVER PLATING PROCEDURE (ALUMINUM) ZINCATE TREATMENT.

a. Degrease the part in a vapor degreaser.

b. Lightly zirconite blast the area to be plated.

c. Insulate the part if/as required with wax.

d. Scrub the area to be plated using pumice, Federal Specification SS-P-821.

e. Thoroughly rinse the part in cold water.

f. Position the part on a suitable rack or hook. If the part is to be plated in the ID, the rack should provide accommodation for a stainless steel ID anode. Do not position the anode in the ID at this time.

g. Immerse the part in nitric-hydrofluoric acid (Solution No. 31) for eight minutes. Agitate the solution occasionally to release adhering gas bubbles.

h. Thoroughly rinse the part and fixture in cold water to prevent possible solution entrapment.

i. Immerse the part in a zinc immersion solution, (Solution No. 15) employing constant agitation for 30 seconds. Maintain the solution temperature below 27°C (80°F).

j. Thoroughly rinse the part in cold water.

k. Immerse the part in nitric-hydrofluoric acid until the zinc layer is removed. The zinc should be stripped in approximately 30 seconds.

NOTE

When the strip tank is made up, it is identical to the etch tank, however, separate baths should be used to prevent contamination of the etch solution.

l. Thoroughly rinse the part and fixture to prevent a possible solution entrapment. If the part is to be plated in the ID, position a suitable ID stainless steel anode.

m. Immerse the part in zinc immersion solution and employ constant agitation for 30 seconds.

n. Thoroughly rinse the part in cold water.

o. Immerse the part in a silver strike solution (Solution No. 14), making anodic and/or cathodic contacts prior to entry. Plate at a rate of 200 amperes per square foot for ten seconds. Lower the current to 20 - 30 amperes per square foot for 80 seconds.

p. Immerse the part in the silver plate solution (Solution No. 26) making anodic and/or cathodic contacts prior to entry. Plate at 20 - 25 amperes per square foot. The plating rate is approximately 0.002 - 0.003 inch per hour.

q. Rinse the part in cold water.

r. Rinse the part in hot water and blow dry.

s. Remove the part from its rack or hook.

t. Remove the insulation if applied at the previous step c.

u. Inspect the part for a smooth, continuous, adherent plate free from pin holes, porosity, blisters and flaking.

6-859. SILVER PLATING PROCEDURE (BRONZE).

a. Degrease the part in a vapor degreaser.

b. Insulate the part if/as required.

c. Position the part on a suitable rack or hook. If the part is to be plated in the ID, the rack should provide accommodation for a stainless steel ID anode.

d. Soak the part in a soap solution for five minutes.

e. Thoroughly rinse the part in hot water.

f. Immerse the part in persulfate etch (Solution No. 33) for one to two minutes.

g. Thoroughly rinse the part in cold water.

h. Dip the part in sodium cyanide (Solution No. 39) for 15 - 20 seconds.

i. Immerse the part in silver strike solution (Solution No. 14) making anodic and cathodic contacts prior to entry, and plate at 15 to 30 amperes per square foot for one to two minutes.

j. Immerse the part in a silver plate solution (Solution No. 26) making anodic and cathodic contacts prior to entry, and plate at 20 amperes per square foot, with vigorous solution agitation. Plating rate is approximately 0.002 to 0.003 inch per hour.

k. Rinse the part in cold water.

l. Rinse the part in hot water and blow dry.

m. Remove the part from the rack or hook.

n. Remove the insulation, if applied.

o. Inspect the part for a smooth, continuous adherent plate, free from pin holes, porosity, blisters and flaking.

6-860. BOND TESTING BY SHOT-PEENING OF COPPER STRIKE PARTS.

a. Size of the shot should correspond to SAE shot S-170 as follows: zero per cent on a number 20 sieve, a minimum of 70 per cent on a number 40 sieve, and a maximum of 20 per cent through a number 50 sieve.

b. Hardness of the shot should range from 350 - 600 maximum Vickers Point Number. Harness of 60 per cent of the shot should fall between 400 - 525 Vickers Point Number.

c. The quantity of odd shaped shot shall be held to an amount which will not interfere with the required performance.

d. Check each lot of parts, 100 per cent, for thickness of silver, using a Magne-Gage.

e. For the thickness of silver plate required, prior to shot-peen bond testing, to satisfy a specific finished thickness dimension, refer to the graph shown in figure 6-276.

f. Each acceptable part is to be marked with its maximum silver plate thickness so that each part may be identified easily for subsequent peening.

g. These parts should be placed in groups varying not more than 0.005 inch thickness of silver plate.

h. Each group is to be peened to the minimum arc height for maximum thickness of that group, as shown in figure 6-277.

i. Adjust the peening intensity by using Almen A2 Specimen Gage to provide the required arc height.

NOTE

An Almen A test strip is inserted in an appropriate test strip holder and peened in the same manner as the part. The test strip is then removed and the arc height checked on an Almen Number 2 gage. A test strip will be run at the beginning of every lot, and every hour thereafter, if a lot is continuous. To use the Almen Number 2 gage, the test strip is located so that the indicator pointer bears against the non-peened surface.

6-861. SHOT-PEENING PROCEDURE.

a. Degrease the part in a vapor degreaser.

b. Mask all the areas of the part that do not require shot-peening.

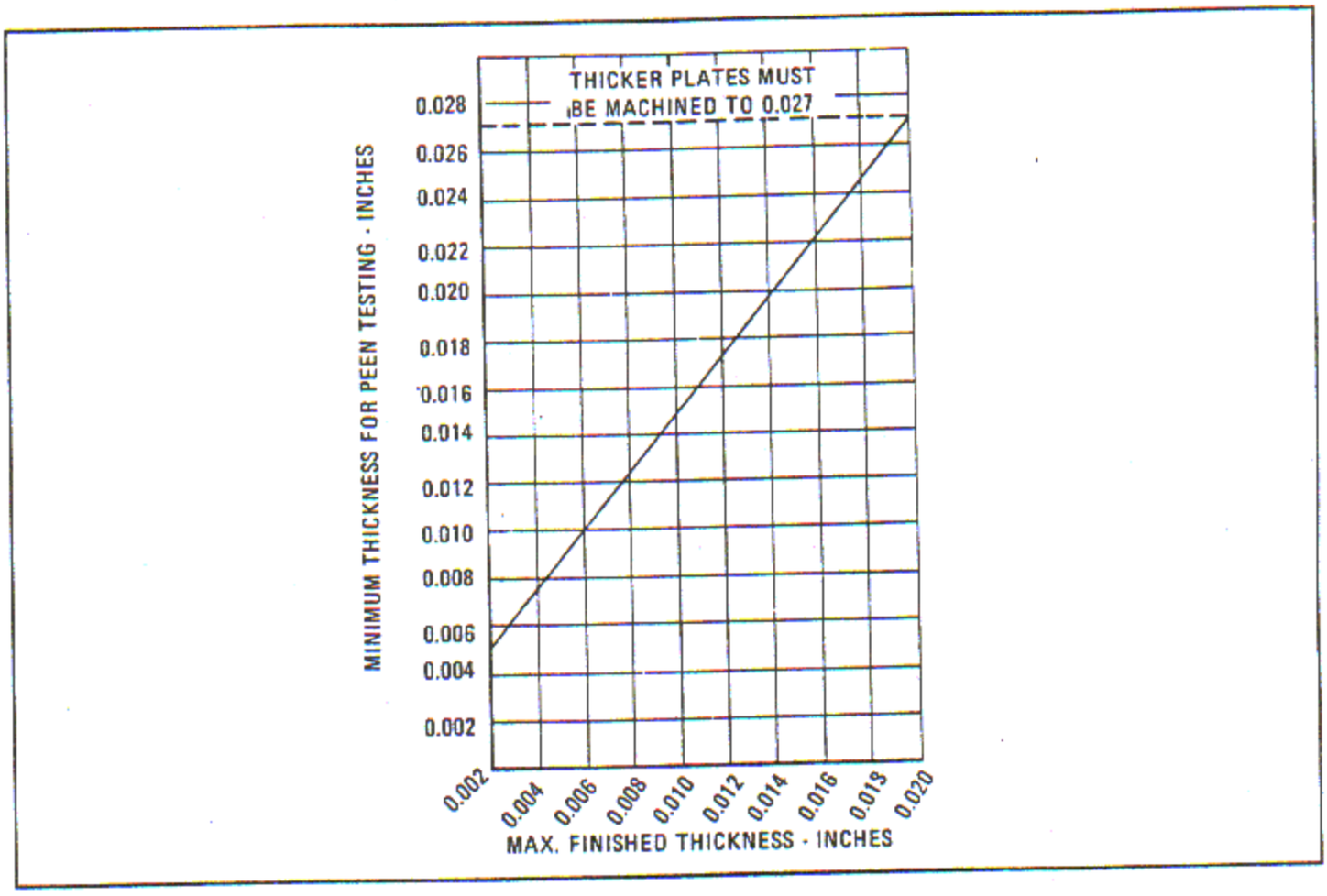

Figure 6-276. Thickness of Silver Plate Prior to Shot-Peen Bond Testing

c. Shot-peen all the areas of the part that require shot-peening, using the appropriate size of shot.

d. The air pressure required is determined by the height of the arc. Length of time is determined by the finish on the test strip.

e. After shot-peening, the coverage is to be checked visually by the operator. If coverage of the shot-peened area is not complete, the parts must again be shot-peened.

f. Remove residual shot by blowing off the parts with dry air.

6-862. LEAD-TIN PLATE.

a. The process of plating surfaces with lead-tin consists of electrodeposition of metallic lead and tin from a suitable lead-tin fluoborate solution, directly on the cleaned surfaces. The composition of the deposit shall be 6.0 - 9.5 per cent tin and the remainder lead.

b. The lead-tin anodes shall be 93 per cent lead and 7 per cent tin, either in the form of flat strips of suitable size for suspension from the anode rails of plating containers or as rods of the required diameter and length for use in special plating fixtures.

c. In the special case of plating a bearing, certain modifications become necessary. The size of the anode is dependent on the ID of the bearing. The diameter of the anode should be about one-third the diameter of the bearing and it should not be allowed to decrease to less than one-sixth the diameter of the bearing. The length of the anode should be no more than one inch longer than the bearing length. It should be stopped off with laxquer, or tape, so that the exposed surface is 1/16 inch less on the top and bottom than the

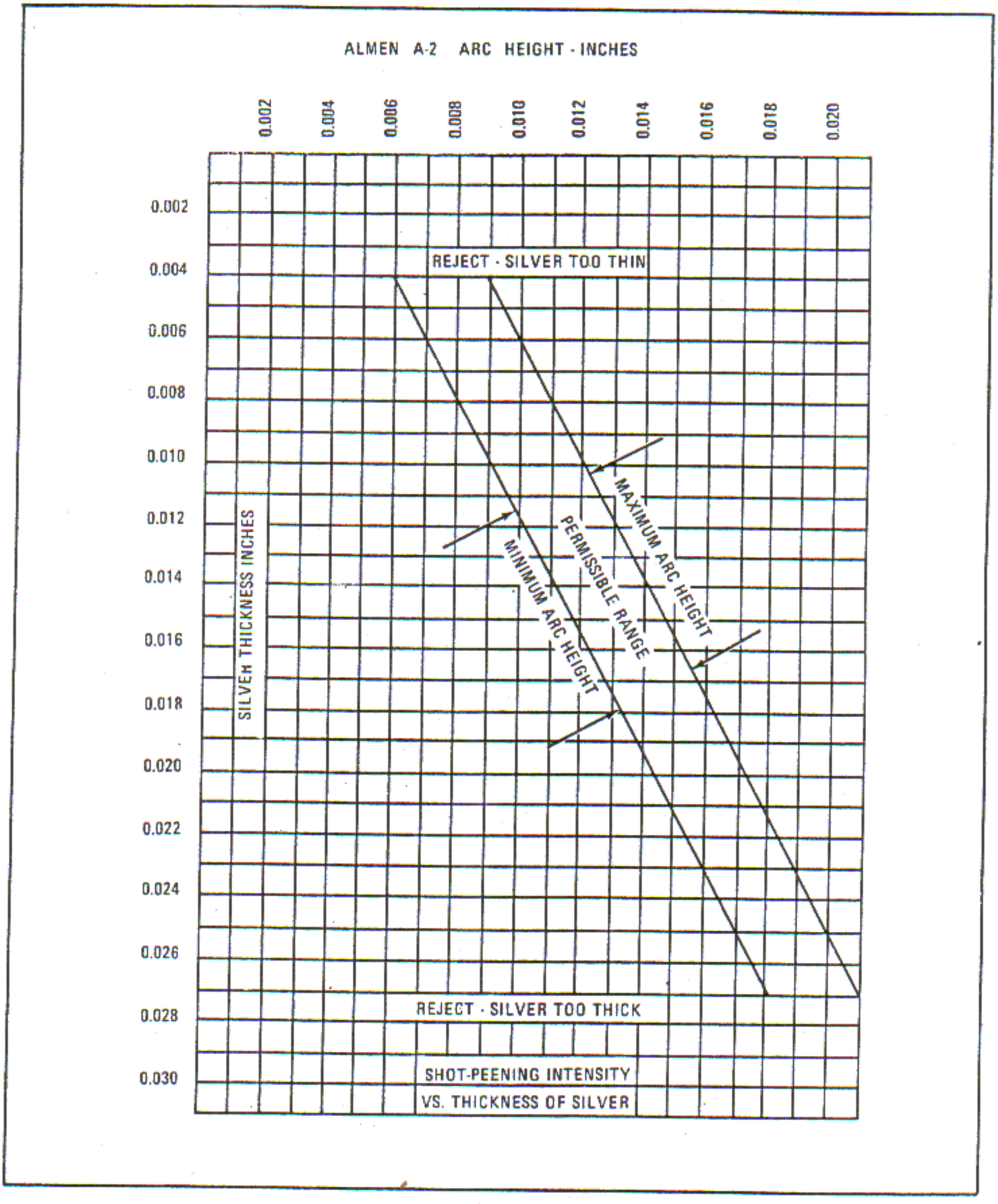

Figure 6-277. Alman A-2 Arc Height-Inches

length of the bearing. This prevents a build-up deposit on the bearing rims. When the anodes have been reduced appreciably in size and shape, they should be discarded and replaced with new ones.

NOTE

Unless otherwise specified, maintain temperature ranges of 10 - 32°C (50 - 90°F) for cold water and 82-100°C (180 - 212°F) for hot water during rinsing operations.

6-863. LEAD-TIN STRIPPING PROCEDURE (SOLUTION NO. 5).

NOTE

Some parts to be replated may have been lead-indium plated originally. Strip these parts in the same manner as lead-tin plated parts and replate with lead-tin.

a. Degrease the part in a vapor degreaser.

b. Immerse the part in a hot soap cleaner solution (Solution No. 38) for five minutes.

c. Rinse the part in hot water and then in cold water.

d. Immerse the part in the lead-tin stripping solution until the basis metal first shows through plate and then remove it from the solution. Scrub the surface being stripped with finely powdered pumice, Federal Specifications SS-P-821, and water, using a bristle brush, until the remainder of of the plate is removed. Brush the scrubbed surface in running tap water to remove the pumice completely.

NOTE

Enthone lead-tin stripper (Solution No. 6) may be used for stripping the lead-tin deposits in lieu of the solution specified above. Proceed as in steps a through c of this paragraph and then immerse the part in the strip solution operated at 82 - 93°C (180 - 200°F).

e. Rinse part in cold water, then in hot water and blow dry.

f. Inspect the part for cracks, excessive scoring, foreign material loading, or any abnormal condition which would make the part unfit for further use and which could not be determined prior to stripping.

g. If the stripped part is not to be plated immediately, coat it with corrosion preventive compound, Military Specification MIL-C-6529.

6-864. LEAD-TIN PLATING PROCEDURE (SOLUTION NO. 22).

a. Demagnetize any steel part or part having a steel backing.

b. Degrease the part in a vapor degreaser if previously coated with corrosion preventive compound.

c. Immerse the part in hot soap cleaner solution (Solution No. 38) for five minutes.

d. Rinse the part in warm water and blow dry.

e. Insulate the part with wax if/as required. Wipe the surfaces to be plated with clean thinner, Federal Specification TT-T-266, to remove any wax film which would interfere with the electrodeposition of lead-tin. The surfaces to be replated are indicated by the original plated surfaces on the part.

f. Select the instructions from steps g, h or i, whichever is applicable.

g. Immerse the part in persulfate etching solution (Solution No. 33) for one to two minutes, (for copper alloy detail parts only).

h. Electroclean the part cathodically in cathodic cleaning solution (Solution No. 37) for 15 to 30 seconds (for silver plated parts). Do not employ if the part is insulated with wax.

i. Immerse the part in sodium cyanide solution (Solution No. 39) for 15 to 30 seconds (for copper alloy basis metal on steel backing).

j. Rinse the part in cold water.

k. If the part shows discoloration or staining after the preceding operations, scrub the surfaces to be plated with pumice, Federal Specification SS-P-821, and water using a soft bristle brush. Brush the scrubbed surfaces in running tap water to remove the pumice completely.

l. Rinse the part in cold water.

m. Insert rubber stoppers or cork plugs at this stage, as applicable. Do not touch the surfaces to be plated.

n. Rinse the part in cold water.

o. Place the cleaned part in the lead-tin plating tank or in the lead-tin plating fixture, whichever is applicable. Avoid handling the surfaces to be plated.

p. Adjust the plating solution level, if a plating fixture is used.

q. Close the electrical circuit through the tank or fixture. Adjust the current to obtain a cathode current density of 30 amperes per square foot, and maintain the current for the time necessary to deposit the required thickness of lead-tin. In most cases, the lead-tin plate thickness should be 0.0004 to 0.0006 inch. In some cases it may be necessary to control the current for the plating of inside and outside surfaces separately to obtain the desired thickness of plate.

r. Rinse the part in cold water.

s. Remove the insulating wax, rubber stoppers, or corks from the part, if applied.

t. Pumice scrub to remove stains, if necessary.

u. Rinse the part in hot water and blow dry.

v. Inspect the plated surface. The lead-tin plating should be continuous, dense, adherent and free from pin holes and blisters. If any of the aforementioned defects are revealed during inspection, the plated part is unsatisfactory for use in the engine.

w. If the plated part is not to be used immediately, coat it with corrosion preventive compound, Military Specification MIL-C-6529.

x. Place all the plated parts in suitable containers to eliminate the possibility of damage during subsequent handling.

y. Prior to installation of the part in an engine, reinspect the lead-tin plate. Slight staining or discoloration which may appear on plated parts during storage, shall not be cause for rejection.

6-865. CHROMIUM PLATING.

6-865A. GENERAL. This instruction will provide a general procedure for electrodeposition of chromium on a steel or stainless steel surface from a solution of chromic and sulfuric acids, using insoluble anodes. Chromium plating is employed primarily to provide a wear or abrasion resistant surface and for reconditioning worn or undersize engine parts. The anodes required for chromium plating consists of 92 - 94 percent lead and 6 - 8 percent tin or antimony. To provide a chromium plating procedure for aluminum, a zincate treatment followed by a suitable copper strike is also described.

NOTE

Unless otherwise specified, maintain the temperature range of 10 - 32°C (50 - 90°F) for cold water and 82 - 100°C (180 - 212°F) for hot water during rinsing operations.

6-866. CHROMIUM STRIPPING PROCEDURE (STEEL, COPPER AND ALUMINUM).

a. Degrease the part in a vapor degreaser.

NOTE

If the presence of chromium plating is questionable, as on a polished steel surface, thoroughly clean and dry the area. Using a cloth or sponge, apply a mild solution of copper sulfate prepared as indicated in the following list. An unplated steel area will immediately take on a copper brown tint; a chromium plated area will remain unchanged. This test and the resultant copper tint on an unplated steel surface will in no way affect subsequent use of the part.

Ingredients	Per Cent by Weight
Copper sulfate	2.0
Sulfuric acid	0.5
Water	97.5

b. Select the instructions from the following steps c, d or e, whichever is applicable.

c. Immerse the part (steel) in chromium stripping solution (Solution No. 2) at room temperature. Make the part anodic and apply two and one half to three volts until chromium is completely stripped.

d. Immerse the part (copper alloy) in chromium stripping solution (Solution No. 3) at room temperature until the chromium is completely stripped.

e. Immerse the part (aluminum) is chromium stripping solution (Solution No. 41) operated at a temperature of 77°C (170°F), until the chromium is completely stripped. The stripping rate is approximately 0.001 inch per hour.

f. Rinse the part in cold water, then in hot water and blow dry.

g. If the stripped part is not plated immediately, slush with corrosion preventive compound, Military Specification MIL-C-6529.

6-867. CHROMIUM PLATING PROCEDURE (STEEL AND STAINLESS STEEL).

a. Demagnetize the part if any sign of residual magnetism is evident from previous reconditioning operations.

b. Degrease the part in a vapor degreaser.

c. Bake the part in a circulating air furnace at 115 - 126°C (240 - 260°F) for two hours if the component has been ground prior to step a, or subject to stress during operation.

d. Polish the area of the part to be plated with No. 400 emery cloth, Federal Specification P-C-451.

e. Insulate the part if/as required. Use lacquer, foil or tape. Clean the surfaces to be plated with lacquer thinner, Federal Specification TT-T-266.

f. Position the part on a suitable rack or hook.

g. Immerse the part, with current "OFF", in the chromium plating solution (Solution No. 17) for five minutes or until the part reaches bath temperature.

h. Make the part anodic and etch at six volts for 45 seconds.

NOTE

A stainless steel part is not generally etched.

i. Make the part cathodic and plate at two to two and one half amperes per square inch until the required thickness is obtained.

j. Rinse the part in cold water for 15 - 30 seconds.

k. Check the plate thickness with a suitable measuring instrument.

NOTE

Interruption of the chromium plating cycle for inspection purposes is permissible in most instances for a period of time not exceeding one minute. However, the plated surfaces should under no circumstances be allowed to dry.

l. If plating is resumed, repeat step h for 10 seconds and follow with step i, otherwise omit these steps.

m. Rinse the part in hot water and blow dry.

n. Remove the part from the rack or hook.

o. Remove the insulation if applied.

NOTE

If the plated part is not heat treated immediately, slush with corrosion preventive compound, Military Specification MIL-C-6529.

p. Parts with a Rockwell hardness of C33 or higher shall be baked in a circulating air furnace at 185 - 196°C (365 - 386°F) for three hours. This

treatment is also applicable to a part which is cold worked, after being heat treated, to a hardness higher than Rockwell C27. A carburized part, which will decrease in hardness if heated to 190°C (375°F) shall be baked at 128 - 140°C (265 - 285°F).

NOTE

The bake operation while improving machineability will also produce a considerable reduction in endurance limit. Therefore, if the chromium plate can be satisfactorily ground without baking, especially on a highly stressed part, a greater percentage of original endurance limit will be retained.

q. Inspect the part for a smooth, continuous, uniform plate free from pin holes, porosity, blisters, nodules, pits and other harmful defects.

r. Slush the part with corrosion preventive compound, Military Specification MIL-C-6529.

6-868. CHROMIUM PLATING PROCEDURE (NITRIDED OR CARBURIZED SURFACE).

a. Demagnetize the part if any sign of residual magnetism is evident from previous reconditioning operations.

NOTE

If the surface to be plated has a black residue from nitriding process, the surface may be wet blasted with grade 320 aluminum oxide, employing a line pressure of approximately 80 psi. An alternate method is described in steps h through m.

b. Degrease the part in a vapor degreaser.

c. Bake the part in a circulating air furnace at 128 - 140°C (265 - 285°F) for two hours if the component has been ground prior to step a, or subject to stress during operation.

d. Polish the area of the part to be plated with No. 400 emery cloth, Federal Specification P-C-451, if the surface was ground prior to step a.

e. Insulate the part if/as required. Use lacquer, foil or tape. Clean the surfaces to be plated with lacquer thinner, Federal Specification TT-T-266.

f. Position the part on a suitable rack or hook.

g. Follow steps h through m only, if the surface to be plated has a black residue from the nitriding process and the surface has not been wet blasted.

h. Electroclean the part in anodic alkaline cleaner (Solution No. 36) for one and one half to two minutes.

i. Rinse the part in hot water, then in cold water and blow dry.

j. Anodically etch the part in a 50 per cent solution of sulfuric acid (Solution No. 34) at room temperature or below at two to three amperes per square inch for 15 seconds. The black residue may be or may not be removed in etch tank.

k. Rinse the part thoroughly in cold water.

l. Scrub the part with pumice, Federal Specification SS-P-821, to remove all traces of black residue.

m. Rinse the part in flowing cold water.

n. Immerse the part with current "OFF" in the chromium plating solution for five minutes or until the part reaches bath temperature.

o. Make the part anodic and etch at one to two amperes per square inch for two minutes.

p. Make the part cathodic and plate at two to two and one half amperes per square inch until the required thickness is obtained.

q. Rinse the part in flowing cold water for 15 to 30 seconds.

NOTE

Interruption of the chromium plating cycle for inspection purposes is permissible in more instances for a period of time not exceeding one minute. However, the plated surface should under no circumstances be allowed to dry.

r. Check the plate thickness with a suitable measuring instrument.

s. If plating is resumed, repeat step p for 10 seconds and follow with step q, otherwise omit these steps.

t. Rinse the part in hot water and blow dry.

u. Remove the part from the rack or hook.

v. Remove the insulation if applied.

w. Bake a nitrided part in a suitable circulating air furnace at 185 - 195°C (365 - 385°F) for three hours. A carburized part should be baked at 128 - 140°C (265 - 285°F).

NOTE

The baking operation while improving machineability will also produce a considerable reduction in the endurance limit. Therefore, if the chromium plate can be satisfactorily ground without baking, especially on a highly stressed part, a greater percentage of the original endurance limit will be retained.

x. Inspect the part for a smooth, continuous, uniform plate, free from pin holes, porosity, blisters, nodules, pits and other harmful defects.

y. Slush the part with corrosion preventive compound, Military Specification MIL-C-6529.

6-869. CHROMIUM PLATING (ALUMINUM), ZINCATE TREATMENT.

a. Degrease the part in a vapor degreaser.

b. Wet blast the part to remove any soil, stains or surface treatments such as paint and anodize. Use grade 320 aluminum oxide grit, or equivalent, and a line pressure of 80 to 100 psi.

c. Insulate the parts, if/as required, with suitable tape, and coat them with stop-off lacquer.

d. Scrub area to be plated with pumice, Federal Specification SS-P-821.

e. Thoroughly rinse the part in cold water.

f. Place the part on a suitable rack or hook.

g. Etch the part in nitric-hydrofluoric acid (Solution No. 31) for 30 - 60 seconds.

h. Thoroughly rinse the part in cold water.

i. Immerse the part in zinc immersion solution (Solution No. 15) for 30 - 60 seconds and agitate it during the first few seconds in the bath.

j. Thoroughly rinse the part in cold water.

k. Immerse the part in nitric-hydrofluoric acid (Solution No. 31) until the zinc layer is removed.

l. Thoroughly rinse the part in cold water.

m. Immerse the part in the zinc immersion solution for 30 - 60 seconds and agitate it during the first few seconds in the bath.

n. Thoroughly rinse the part in hot water and then in cold water.

o. Immerse the part in the copper strike solution (Solution No. 11) making anodic and/or cathodic contacts prior to entry, and plate at 24 amperes per square foot. After two minutes reduce the current to 12 amperes per square foot and plate an additional three to five minutes.

p. Thoroughly rinse the part in cold water.

q. Immerse the part in chromium plate solution (Solution No. 17) and plate at two and one half amperes per square inch until the authorized thickness for the specific part is obtained.

r. Rinse the part in cold water, and then in hot water and blow dry.

s. Remove the part from rack.

t. Remove the insulation from the part if applied at step c.

u. Bake the part at 127 - 140°C (265 - 285°F) in a circulating air furnace for not less than five hours.

v. Inspect the part for a smooth, continuous, uniform plate, free from pin holes, porosity, blisters, nodules, pits, flaking and other harmful defects.

6-870. ELECTROLESS NICKEL PLATING AND NICKEL SULFAMATE PLATING.

6-870A. GENERAL. This instruction will provide specific procedures for the deposition of a nickel and phosphorous alloy on either an aluminum or steel surface from an alkaline nickel chloride-sodium hypophosphite solution. The composition of the alloy is approximately seven percent phosphorous with the remainder nickel. It provides a relatively thin, hard, wear resistant surface for a basis metal such as aluminum. On steel, it may be employed for the limited buildup of an OD or spline to regain the required pinch fit with a mating part. For this application, authorization is required from the manufacturer. The hardness ductility and wear resistant characteristics of the nickel plate will be enhanced by a suitable heat treatment of the part. Recommended time and temperatures are designated in the procedure.

NOTE

Preliminary cleaning of part to remove carbon, soil or other undesirable matter should be accomplished by soft grit blasting.

6-871. STRIPPING PROCEDURE (ALUMINUM).

a. Degrease the part in a vapor degreaser.

b. After the part has cooled to room temperature, immerse it in concentrated nitric acid until all the nickel is stripped.

c. Rinse the part in cold water, and then in hot water and blow dry.

6-872. ELECTROLESS NICKEL PLATING PROCEDURE (ALKALINE BATH).

a. Degrease the part in a vapor degreaser.

b. Insulate the part if/as required by spraying it with three coats of stop-off lacquer (Fidelity EX37). Allow the lacquer to air dry 15 to 30 minutes between coats. Trim and touch up the lacquer. Clean with lacquer thinner (Fidelity EX37), and air dry for 30 minutes. Bake the part at 87 - 93°C (190 - 200° F) for two hours and cool in air. Inspect the insulation to ensure against leakage in subsequent operations.

NOTE

A mixture of five parts lacquer to one part of thinner is employed to insulated parts.

c. Clean the surfaces to be plated, with thinner and scrub lightly with pumice, Federal Specification SS-P-821.

d. Rinse and flush the part thoroughly in cold water.

e. Etch the part for five minutes in a nitric-hydrofluoric acid mixture. Use Solution No. 31 for AMS 4140 alloy, or Solution No. 32 for WAD 6233 alloy. Agitate the part, when it is first immersed in the etching solution, and at least two or three more times during the etching period. Use sufficient solution in the container to cover the part, and operate at room temperature. Discard the solution after etching. If a smut develops on the surface of the part, remove it from the etching solution and treat it in concentrated nitric acid. The black smut is an indication of a low concentration of nitric acid in the etching solution. The etching solution should be discarded and a new bath prepared.

f. Rinse the part in flowing hot water and wipe the surface to be plated with a wet sponge to remove shreds of lacquer if the part has been insulated. If the hot water tank does not have a continuous overflow, rinse again in a second tank of clean hot water.

NOTE

Do not handle the surfaces to be plated. The transfer from step f to h should be accomplished quickly with the part remaining wet.

g. Place nickel plating solution (Solution No. 24) in a glass container. Use 26 mls of solution per square inch of area to be plated. Maintain solution at 87 - 93°C (190 - 200°F). For each liter of plating solution, add 200 mls of ammonia-hypo mixture at the time the part is placed in the etch.

h. Place the part in the plating solution and agitate by swirling a few times.

i. Position the part so that the surfaces to be plated do not contact the container. The part must still be hot from the rinse in step f.

j. After 60 minutes, raise the part out of the solution and make an addition of 100 mls of ammonia-hypo solution for each liter of plating solution.

k. Place the part back in the bath and agitate by swirling the part a few times.

l. After two hours of plating time, remove the part from the bath. The solution must be blue, ph 10 or higher. A green color indicates lack of ammonia. The plating rate of the solution, under normal operating conditions is above 0.00025 inch per hour. If a plate thickness greater than 0.0003 to 0.0007 inch is required, a new bath should be prepared for immediately continued operation after completing the second hour of plating. A plate thickness in excess of 0.001 inch is not recommended.

NOTE

The ammonia-hypo mixture is made as follows: To one quart of distilled or de-ionized water add eight ounces of sodium hypophosphite. Mix thoroughly and filter into three quarts of ammonia. Stir thoroughly and the solution is ready for use.

m. Rinse the part in hot water and blow dry.

NOTE

Do not plate a second part with used solution.

n. Remove the lacquer insulation by immersing the part in lacquer thinner for about 30 - 60 minutes. A scrubbing action with a soft bristle brush is then utilized to facilitate removal. Soak the part in a second tank for about 15 minutes and scrub of the remaining lacquer. Rinse the part in a third tank of clean solvent.

NOTE

Used solvent from the third tank can be placed in the second tank and that in the second tank in the first tank.

o. Heat treat the part in a controlled oven at 143 - 154°C (290 - 310° F) for eight hours. This bake will increase the ductility and hardness of the nickel plate.

CAUTION

Do not exceed the above temperature as a detrimental effect to the aluminum alloy may result.

p. Inspect the part for a smooth, even and adherent nickel plate, free from blisters, pin holes and other detrimental effects. Soft grit blasting may be used as a means for checking the bond of nickel plate upon completion of the plating and heat treat cycles.

CAUTION

Prolonged blasting in one spot, presence of any foreign material such as sand or metallic chips in the soft grit blast material, or excessive pressure may result in damage to the nickel plate and to the part.

q. Using a standard soft grit blast material and an air pressure of 80 to 85 psi, rotate the part for one complete revolution in 30 to 45 seconds holding the nozzle perpendicular to the work surface.

6-873. ELECTROLESS NICKEL PLATING PROCEDURE (STEEL).

a. Degrease the part in a vapor degreaser.

NOTE

Lacquer mixture should consist of five parts Fidelity Stop-Off Lacquer EX37, and one part Fidelity EX37 thinner. Touch up any exposed areas and clean with thinner. Allow the part to dry for 30 minutes. Bake the part for two hours in a circulating air furnace at 87 - 93°C (190 - 200° F) and allow it to cool in air.

b. Insulate the part if/as required with Fidelity Stop-Off Lacquer. Spray the area to be insulated with four coats of lacquer. Allow each coat to air dry for 15 - 20 minutes.

c. Scrub the part with pumice, Federal Specification SS-P-881, and thoroughly rinse in cold water.

d. Electroclean the part in anodic cleaner (Solution No. 36) for 30 - 60 seconds.

e. Rinse the part in warm water.

f. Immerse the part in muriatic acid for 30 to 60 seconds.

g. Rinse the part in cold water.

h. Rinse the part in hot water.

i. Immerse the part in the electroless nickel plating solution, (Solution No. 24). A maximum plate thickness of 0.001 inch is authorized. Plating rate is approximately 0.00025 inch per hour. Refer to paragraph 6-872, steps f through l for complete details and requirements.

j. Rinse the part in hot water and blow dry.

k. Remove lacquer in lacquer thinner. Refer to paragraph 6-872, step n.

l. Heat treat the part in a controlled oven at 130 - 141°C (265 - 285°F) for eight hours. This bake will increase the ductility and hardness of the nickel plate.

m. Inspect the part for a smooth, even and adherent nickel plate free from blisters, pin holes and all harmful defects. Refer to paragraph 6-872, step p for soft grit blasting procedure to check bond of nickel plate, if desired.

6-874. NICKEL SULFAMATE PLATING. This instruction will provide a general procedure for the electrodeposition of nickel from a sulfamate bath, on any steel or stainless steel surface. The primary purpose of this bath is to build up the eroded or worn area on a part, where the application of chromium plate with the inherent internal stresses and subsequent decrease in endurance limit of the basis metal would prove objectionable. Refer to Solution No. 25, for the solution and chemical source.

6-875. NICKEL STRIPPING PROCEDURE (STEEL ONLY). Before plating any component it is necessary to strip all electrodeposits from the basis metal. If any nickel deposit has been previously applied it should be removed by machining or the nickel stripping procedure, paragraph 6-850.

6-876. NICKEL SULFAMATE PLATING PROCEDURE (STEEL, MORE THAN 0.30 PER CENT CARBON).

NOTE

The electrolytic sulfuric etch, step n, is necessary when plating a surface where the carbon content of the steel exceeds 0.30 per cent. If the basis metal (steel) does not have a high carbon content on the surface being plated (less than 0.30 per cent) the electrolytic sulfuric etch and subsequent cold rinse, steps n and o respectively, should be omitted.

a. Demagnatize the part if any sign of residual magnetism is evident from previous reconditioning operations.

b. Degrease the part in a vapor degreaser.

c. Bake the part in a suitable circulating air furnace at 128 - 140°C (265 - 285°F) for two hours if the component has been ground prior to step a or subject to stress during operation.

d. Place the part on a suitable rack or hook.

e. Electroclean the part in anodic alkaline cleaner (Solution No. 36) for 30 - 120 seconds.

f. Rinse the part in warm water.

g. Immerse the part in a 17 per cent solution of muriatic acid (Solution No. 30) for 30 - 60 seconds.

h. Rinse the part in cold water, then in hot water and blow dry.

i. Insulate the part if/as required.

j. Electroclean the part in anodic alkaline cleaner for 90 - 120 seconds.

k. Rinse the part in warm water.

l. Immerse the part in a 17 per cent solution of muriatic acid (Solution No. 30) for 30 - 60 seconds.

m. Rinse the part in cold water.

n. Etch the part in a 50 per cent solution of sulfuric acid (Solution No. 34) at 200 - 400 amperes per square foot for three minutes.

o. Rinse the part in cold water.

p. Immerse the part in nickel sulfamate solution (Solution No. 25) and plate at 60 amperes per square foot. Employ constant agitation of the part. Do not interrupt the flow of current to the part after initial contact is made.

NOTE

There must be no more than 60 seconds time interval between the anodic etch and the start of plating.

q. Rinse the part in cold water, then in hot water and blow dry.

r. Remove the part from rack or nook.

s. Check the plate thickness with a Magne-Gage, or suitable measuring instrument.

t. Remove the insulation if applied.

u. Bake the part in a suitable circulating air furnace at 185 - 196°C (365 - 385°F) for three hours. A carburized part which will decrease in hardness if heated to 190°C (375°F) for three hours should be baked at 128 - 140°C (265 - 285°F) for five hours.

v. Inspect the part for a smooth, continuous, uniform plate, free from pin holes, porosity, blisters, nodules, pits and other harmful defects.

6-877. NICKEL SULFAMATE PLATING PROCEDURE (STAINLESS STEEL).

a. Degrease the part in a vapor degreaser.

b. Bake the part in a circulating air furnace at 115 - 126°C (240 - 260°F) for 30 minutes if the part has been ground prior to step a, or subject to stress during operation.

c. Place the part on a suitable rack or hook.

d. Electroclean the part in anodic alkaline cleaner (Solution No. 36) for 90 - 120 seconds.

e. Rinse the part in warm water.

f. Immerse the part in a 17 per cent solution of muriatic acid (Solution No. 30) for 30 - 60 seconds.

g. Rinse the part in cold water, then in hot water and blow dry.

h. Insulate the part if/as required.

i. Electroclean the part in anodic alkaline cleaner for 90 - 120 seconds.

j. Rinse the part in warm water.

k. Immerse the part in a 17 per cent solution of muriatic acid for 30 - 60 seconds.

l. Rinse the part in cold water.

m. Immerse the part in Wood's nickel strike bath (Solution No. 13) and plate at six volts for one to two minutes. Agitate the part while plating to release adhering gas bubbles.

NOTE

Time interval from step n to step o should be as short as possible.

n. Thoroughly rinse the part in flowing cold water.

o. Immerse the part in nickel sulfamate solution (Solution No. 25) and plate at 60 amperes per square foot until the desired thickness is obtained. Employ constant agitation of the part. Do not interrupt the flow of current to the part after initial contact is made.

p. Rinse the part in cold water, then in hot water and blow dry.

q. Remove the part from the rack or hook.

r. Check the plate thickness with a suitable measuring instrument.

s. Remove the insulation if applied at step h.

t. Bake the part in a circulating air furnace at 190°C (375°F) for three hours.

u. Inspect the part for a smooth, continuous, uniform plate, free from pin holes, porosity, blisters, nodules, pits and other harmful defects.

v. Slush the part with corrosion preventive compound, Military Specification, MIL-C-6529.

6-878. CADMIUM PLATING.

6-878A. GENERAL. This instruction will provide a general procedure for the electrodeposition of cadmium on a steel or copper alloy surface from a cadmium cyanide solution. The principle purpose of a cadmium coating is to impart surface corrosion resistance to the component. The cadmium shall be deposited directly on the part without a flash undercoating of another metal, such as copper or nickel. An exception is a part made of corrosion resistant steel on which a preliminary flash of nickel (Wood's) or suitable metal is permissible.

6-879. CADMIUM STRIPPING PROCEDURE.

NOTE

Before replating any engine components, it will be necessary to strip all the electrodeposits from basis metal in the following manner.

a. Degrease the part in a vapor degreaser.

b. Immerse the part in soap solution (Solution No. 38) for five minutes.

c. Rinse the part in warm water.

d. Immerse the part in cadmium strip bath (Solution No. 1).

e. Rinse the part in cold water, then in hot water and blow dry.

6-880. CADMIUM PLATING PROCEDURE (SOLUTION NO. 16).

NOTE

Provide an overhead hoist above the appropriate tank to facilitate handling of heavy components.

a. Demagnetize the part if any sign of residual magnetism is evident from previous reconditioning operations.

b. Degrease the part in a vapor degreaser.

NOTE

Ground case hardened parts shall be stress relieved at 128 - 140°C (265 - 285°F) for two hours prior to cleaning.

c. Apply insulation if/as required.

d. Place the part on a suitable rack or hook.

e. Electroclean steel parts in anodic alkaline cleaner (Solution No. 36) for 90 - 120 seconds. A brass or bronze part should soak in cathodic alkaline cleaning solution (Solution No. 37) without current for 30 - 60 seconds, then make the part cathodic for 15 seconds.

f. Rinse the part in warm water.

g. Immerse the part in a 17 per cent solution of muriatic acid (Solution No. 30) for 90 - 120 seconds.

h. Rinse the part in cold water.

i. Immerse the part in cadmium plating solution and plate at 10 - 15 amperes per square foot to obtain the desired plate thickness as per AMS 2400. Agitate the part occasionally to release adhering gas bubbles.

NOTE

General cadmium thickness requirements on nuts, washers, valve springs and parts with externally threaded surfaces is 0.0002 - 0.0003 inch, except that thread roots may be 0.0001 inch; on parts other than nuts, washers and valve springs, with no externally threaded surfaces, 0.0003 - 0.0005 inch. There are no thickness requirements in holes or on surfaces which cannot be touched with a 3/4 inch diameter ball, unless specifically stated in the instruction.

j. Rinse the part in cold water.

k. Check the plate thickness with a Magne-Gage or suitable measuring instrument. Apply this step as required.

l. Dip the part in a three to five per cent chromic acid solution (Solution No. 28) for five seconds and agitate while immersed.

m. Rinse the part in cold water, then in hot water and blow dry.

n. Remove the part from the rack or hook.

o. Remove the insulation if applied.

p. Parts with a Rockwell hardness of C33 or higher should be baked in a suitable circulating air furnace at 185 - 196°C (365 - 385°F) for three hours. This treatment is also applicable to a part which is cold worked after being heat treated to a hardness higher than C27. A carburized part which will decrease in hardness if heated to 190°C (375° F) shall be baked at 128 - 140°C (265 - 285°F) for five hours.

q. Slush the part with corrosion preventive compound, Military Specification MIL-C-6529.

6-881. COPPER PLATING.

6-881A. GENERAL. This instruction will provide a general procedure for the electrodeposition of copper on a steel or stainless steel surface using acid copper solution (Solution No. 18), high speed copper cyanide solution (Solution No. 20) or Rocheltex copper solution (Solution No. 19). The applicable solutions are applied to provide an anti-seize surface and eliminate chafing. This will increase the service life of the component by building up an eroded or worn unstressed area.

6-882. COPPER STRIPPING PROCEDURE.

NOTE

Before replating any steel or stainless steel component it is necessary to strip all electrodeposits from the basis metal.

a. Degrease the part in a vapor degreaser.

b. Immerse the part in a copper stripping solution (Solution No. 40) until all copper is removed.

c. Rinse the part in cold water, then in hot water and blow dry.

6-883. ACID COPPER PLATING (STEEL, MORE THAN 0.30 PER CENT CARBON).

NOTE

This procedure is employed primarily for build up purposes on any steel surface. The electrolytic sulfuric etch in step e is necessary when plating a carburized steel surface or where the carbon content of the steel exceeds 0.30 per cent. If the basis metal (steel) does not have a high carbon content on the surface being plated, (less than 0.30 per cent) the electrolytic sulfuric etch and subsequent cold rinse, step e, should be omitted. This etch is also applicable to the high speed copper and Rocheltex procedures.

a. Demagnetize the part if any sign of residual magnetism is evident from previous rework operations. Degrease the part in a vapor degreaser.

b. Bake (stress relieve) the part in a circulating air furnace at 115 - 126°C (240 - 260°F) for 30 minutes.

NOTE

If the part has not been machined or subject to stress during operation this bake may be omitted.

c. Place the part on a suitable rack or hook. Electroclean the part in anodic alkaline cleaner (Solution No. 36) for 90 - 120 seconds.

d. Rinse the part in warm water. Immerse the part in 17 per cent solution of muriatic acid (Solution No. 30) for 30 - 60 seconds. Thoroughly rinse part in cold water.

e. Etch the part in 50 per cent solution of sulfuric acid (Solution No. 34) at 300 amperes per square foot for three minutes, if carbon content of

the steel exceeds 0.30 percent. Thoroughly rinse the part in cold water.

NOTE

To protect the steel surface at the edge of the insulation against corrosive attack from the subsequent acid copper plating bath, it will be necessary to plate the part all over in a copper cyanide bath prior to insulating.

f. Dip the part in sodium cyanide solution (Solution No. 39). Immerse the part in copper strike solution (Solution No. 20) and plate at 15 amperes per square foot for five minutes. Agitate the part occasionally to eliminate gas pockets or shielding.

g. Rinse the part in cold water, and then in hot water and blow dry.

h. Rack or insulate the part if/as required. If the part is to be plated all over and does not require insulating omit steps g through j.

i. Scrub the area to be plated with pumice, Federal Specification SS-P-821, and thoroughly rinse in cold water. Exercise care not to expose the steel surface as the subsequent acid copper plating is highly corrosive.

j. Immerse the part in persulfate etch solution (Solution No. 33) for one minute. Thoroughly rinse the part in cold water.

k. Immerse the part in a mechanically agitated acid copper bath (Solution No. 18) and plate at 25 amperes per square foot until the desired thickness is obtained. The plating rate is approximately 0.002 inch per hour.

NOTE

The part may be removed from the tank for the purpose of checking the progressive increase in thickness of plate and returned to the tank for additional plate. However, ensure that the part is not permitted to dry while out of the tank.

l. Rinse the part in cold water, and then rinse the part in hot water and blow dry.

m. Remove the part from the rack or hook. Remove the insulation if applied.

NOTE

If required, the protective cyanide copper applied at step f may be stripped.

n. Bake the part in a circulating air furnace at 186 - 196°C (365 - 385°F) for three hours. A carburized part will decrease in hardness if heated to 190°C (375°F). Bake a carburized part at 128 - 140°C (265 - 285°F) for five hours.

o. Inspect the part for a smooth, continuous, adherent, uniform plate, free from pin holes, porosity, blisters, nodules, pits and other harmful defects. The deposit should not be coarsely crystalline. Slight staining and discoloration shall not be cause for rejection.

6-884. HIGH SPEED COPPER PLATE PROCEDURE (STEEL).

a. Demagnetize the part if any sign of residual magnetism is evident from the previous reconditioning operations.

b. Degrease the part in a vapor degreaser.

c. Bake the part in a circulating air furnace at 115 - 126°C (240 - 260°F) for 30 minutes (stress relieve).

NOTE

If the part has not been machined or subject to stress during operation this bake should be omitted.

d. Place the part on a suitable rack or hook.

e. Electroclean the part in an anodic alkaline cleaner (Solution No. 36) for 90 - 120 seconds.

f. Rinse the part in warm water.

g. Immerse the part in muriatic acid (Solution No. 30) for 30 - 60 seconds.

h. Rinse the part in cold water.

i. Rinse the part in hot water and blow dry.

j. Insulate the part if/as required.

k. Electroclean the part in anodic alkaline cleaner (Solution No. 36) for 30 - 120 seconds.

l. Rinse the part in warm water.

m. Immerse the part in a 17 per cent muriatic acid solution for 90 - 120 seconds.

n. Rinse the part in cold water.

NOTE

If the carbon content of the steel part exceeds 0.30 per cent, etch in a 50 per cent solution of sulfuric acid (Solution No. 34) at 300 amperes per square foot for three minutes and thoroughly rinse in cold water. Omit step o and proceed to step p.

o. Dip the part in sodium cyanide solution (Solution No. 39).

p. Immerse the part in a copper strike bath (Solution No. 10) and plate at 15 amperes per square foot for five minutes. Agitate the parts occasionally to eliminate gas pockets or shielding.

q. Immerse the part in high speed copper bath (Solution No. 20) and plate at 15 - 25 amperes per square foot until the desired thickness is obtained. The plating rate is approximately 0.002 inch per hour.

r. Rinse the part in cold water.

s. Rinse the part in hot water and blow dry.

t. Remove the part from the rack or hook.

u. Check the plate thickness with a Magne-Gage, or suitable measuring instrument.

v. Remove the insulation if applied.

w. Bake the part in a suitable circulating air furnace at 185 - 196°C (365 - 385°F) for three hours. A carburized part which will decrease in hardness if heated to 190°C (375°F) for three hours, shall be baked at 128 - 140°C (265 - 285°F) for five hours.

x. Inspect the part for a smooth, continuous, adherent, uniform plate, free from pin holes, porosity, blisters, nodules, pits and other harmful defects. The deposit should not be coarsely crystalline. Slight staining and discoloration shall not be cause for rejection.

NOTE

Rocheltex Copper Plating Solution (Solution No. 19) may be substituted for the high speed copper bath in step q as an optional method of copper plating. The approximate rate of deposition for the Rocheltex bath is 0.0015 inch per hour.

6-885. HIGH SPEED COPPER PLATING PROCEDURE (STAINLESS STEEL).

a. Degrease the part in a vapor degreaser.

b. Bake the part in a circulating air furnace at 115 - 126°C (240 - 260°F) for 30 minutes (stress relieve).

NOTE

If the part has not been machined or subject to stress during operation, this bake should be omitted.

c. Place the part on a suitable hook or rack.

d. Electroclean the part in anodic alkaline cleaner (Solution No. 36) for 90 - 120 seconds.

e. Rinse the part in warm water.

f. Immerse the part in a 17 per cent solution of muriatic acid (Solution No. 30) for 30 - 60 seconds.

g. Rinse the part in cold water.

h. Rinse the part in hot water and blow dry.

i. Insulate the part if/as required. If the part is to be plated on the ID, the rack should provide accommodation for a center anode. A nickel center anode should be positioned in the ID at this step.

j. Electroclean the part in an anodic alkaline cleaner (Solution No. 36) for 90 - 120 seconds.

k. Rinse the part in warm water.

l. Immerse the part in a 17 per cent solution of muriatic acid for 90 - 120 seconds.

m. Rinse the part in cold water.

n. Immerse the part in Wood's nickel strike bath (Solution No. 13) and plate for 90 - 120 seconds at six volts.

o. Rinse the part in cold water.

p. If the ID of the part is to be plated and the nickel anode was positioned in the ID at step i, remove it and replace with a stainless steel anode. The time interval between steps o and p should be as short as possible and not to exceed one minute.

q. Dip the part in sodium cyanide (Solution No. 39).

r. Immerse the part in a copper strike bath (Solution No. 10) and plate at 15 amperes per square foot for five minutes. Agitate the parts occasionally to eliminate gas pockets or shielding.

s. Immerse the part in a high speed copper bath (Solution No. 20) and plate at 15 - 25 amperes per square foot until the desired thickness is obtained. The plating rate is approximately 0.002 inch per hour.

t. Rinse the part in cold water, then hot water and blow dry. Remove the part from the rack or hook.

u. Check the plate thickness with a suitable measuring instrument.

v. Remove the insulation if applied.

w. Bake the part in a circulating air furnace at 185 - 196°C (365 - 385°F) for three hours.

x. Inspect the work piece for a smooth, continuous, adherent, uniform plate, free from pin holes, porosity, blisters, nodules, pits and other harmful defects. The deposit should not be coarsely crystalline. Slight staining and discoloration shall not be cause for rejection.

6-886. HIGH SPEED COPPER PLATING PROCEDURE (BRONZE).

a. Degrease the part in a vapor degreaser.

b. Place the part on a suitable rack or hook.

c. Soak the part in a soap solution (Solution No. 38) for five to ten minutes, then thoroughly rinse the part in hot water.

d. Immerse the part in persulfate etch (Solution No. 33) for one to two minutes, then thoroughly rinse the part in cold water.

e. Insulate the part if/as required.

f. Soak the part in a soap solution for five minutes, then thoroughly rinse the part in hot water.

g. Immerse the part in persulfate etch for one to two minutes then thoroughly rinse the part in cold water.

h. Dip the part in sodium cyanide (Solution No. 39) for 15 - 20 seconds.

i. Immerse the part in a copper strike bath (Solution No. 10) and plate at 15 amperes per square foot for five minutes. Agitate the part occasionally to eliminate gas pockets and shieldings.

j. Immerse the part in a mechanically agitated high speed copper bath (Solution No. 20) and plate at 25 amperes per square foot until the desired thickness is obtained. The plating rate is approximately 0.002 inch per hour.

k. Rinse the part in cold water, then hot water and blow dry.

l. Remove the part from the rack or hook and check the plate thickness with a suitable measuring instrument.

m. Remove the insulation if applied.

n. Inspect the part for a continuous, adherent plate, free from pin holes, porosity and blisters. Where a relatively thick deposit (0.005 to 0.010 inch) is required for machining purposes, a few nodules may be present. This along with slight staining and discoloration shall not be cause for rejection.

6-887. COPPER PLATE (ALUMINUM).

a. Degrease the part in a vapor degreaser.

b. Vapor blast the area to be plated, if necessary.

c. Insulate the part if/as required.

d. Scrub the area to be plated with pumice, Federal Specification SS-P-821.

e. Thoroughly rinse the part in cold water.

f. Position the part on a suitable rack or hook. If the part is to be plated in the ID, the rack should provide accommodation for a stainless steel ID anode. Do not position the anode in the ID at this time.

g. Immerse the part in nitric-hydrofluoric acid (Solution No. 31) for eight minutes. Agitate the solution occasionally to release adhering gas bubbles.

h. Thoroughly rinse the part and fixture in cold water to prevent solution entrapment.

i. Immerse the part in zinc immersion solution. (Solution No. 15) for 30 seconds. Employ constant agitation. Maintain the solution temperature below 27°C (80°F).

j. Thoroughly rinse the part in cold water.

k. Immerse the part in nitric-hydrofluoric acid for approximately 30 seconds or until the zinc layer is removed.

NOTE

When the strip tank is made up, it is identical to the etch tank. However, separate baths should be employed to prevent contamination of the etch solution.

l. Thoroughly rinse the part to prevent possible solution entrapment. If the part is to be plated in the ID, position a suitable stainless steel ID anode.

m. Immerse the part in zinc immersion solution for 30 seconds. Employ constant agitation.

n. Thoroughly rinse the part in cold water.

o. Immerse the part in copper strike solution (Solution No. 11) making anodic and cathodic contacts prior to entry and plate at 24 amperes per square foot. After two minutes, reduce the current to 12 amperes per square foot and plate an additional three to five minutes.

p. Immerse the part in high speed copper bath (Solution No. 20) and plate at 15 - 25 amperes per square foot until the desired thickness is obtained. Plating rate is approximately 0.002 inch per hour.

q. Rinse the part in cold water.

r. Rinse the part in hot water and blow dry.

s. Remove the part from the rack or hook.

t. Remove insulation if applied.

u. Inspect the part for a smooth, continuous, adherent plate, free from pin holes, porosity, blisters and flaking. The deposit should not be coarsely crystalline.

6-888. LEAD PLATING.

6-888A. GENERAL. This instruction will provide a general plating procedure for the electrodeposition of lead directly on a steel surface from a lead fluoborate solution. If the part is constructed of a corrosion resistant steel (stainless), a nickel strike from a Wood's nickel solution should be applied prior to the lead plate. Anodes for the Wood's nickel bath should be 99.00 percent nickel, rolled carbon type. The lead plating anodes should be 99.99 percent lead in the form of flat sheets except where round center anodes are employed.

NOTE

When applied on the threads of highly loaded nuts and bolts, the lead acts as a lubricant and tends to alleviate seizure. When lead plating on an ID, a suitable center anode should be positioned in the ID to obtain a satisfactory plate.

6-889. LEAD AND NICKEL PLATE STRIPPING PROCEDURE. Before replating any component, it is necessary to strip all electrodeposits from the basis metal. The lead and nickel plate (if applied), should be removed with the lead and/or nickel stripping procedure.

6-890. LEAD PLATING PROCEDURE (STEEL).

a. Demagnetize the part if any sign of residual magnetism is evident from previous reconditioning operations.

b. Degrease the part in a vapor degreaser.

c. Insulate the part if/as required.

d. Place the part on a suitable rack or hook. If the part is to be plated in the ID, the rack should provide accommodation for a center anode of lead. The anode should be positioned in the ID at this step.

e. Electroclean the part in anodic alkaline cleaner (Solution No. 36) for 90 - 120 seconds.

f. Rinse the part in warm water.

g. Immerse the part in a 17 per cent solution of muriatic acid (Solution No. 30) for 30 - 60 seconds.

h. Rinse the part in cold water.

i. Immerse the part in a lead plating solution (Solution No. 21) and plate at 15 amperes per square foot until the desired thickness is obtained.

j. Rinse the part in cold water.

k. Remove the insulation if applied.

l. Rinse the part in cold water, then in hot water and blow dry.

m. Remove the part from the rack or hook.

n. Inspect the plated surface for a smooth continuous, dense, adherent plate, free from pin holes, blisters, porosity and other harmful defects.

o. If the part will not be used immediately, slush it with corrosion preventive compound, Military Specification MIL-C-6529.

p. Place the part in a suitable container to eliminate any possibility of damage during subsequent handling. Prior to installation of the part in the engine, reinspect the lead plating. Slight staining or discoloration of the plated surface shall not be a cause for rejection.

6-891. LEAD PLATING PROCEDURE (STAINLESS STEEL).

a. Degrease the part in a vapor degreaser.

b. Insulate the part if/as required.

c. Place the part on a suitable rack or hook. If the part is to be plated in the ID, the rack should provide an accommodation for a center anode. A nickel anode should be employed for Wood's nickel strike while a lead anode is utilized for lead plating. The nickel center anode should be positioned in the ID at this step.

d. Electroclean the part in anodic alkaline cleaner (Solution No. 36) for 90 - 120 seconds.

e. Rinse the part in warm water.

f. Immerse the part in a 17 per cent solution of muriatic acid (Solution No. 30) for 30 - 60 seconds.

g. Rinse the part in cold water.

h. Immerse the part immediately in Wood's nickel plating bath (Solution No. 13). Adjust the current to obtain six volts and plate for 60 - 90 seconds.

i. Rinse the part in cold water.

j. If the ID of the part is to be plated and a nickel anode was positioned in the ID at step c, remove and replace it with a lead anode. The time interval from step i to k should be as short as possible and not exceed one minute.

k. Immerse the part in lead plating solution (Solution No. 21) and plate at 15 amperes per square foot until the desired thickness is obtained.

l. Rinse the part in cold water.

m. Remove the insulation if applied.

n. Rinse the part in cold water and then in hot water and blow dry.

o. Remove the part from the rack or hook.

p. Inspect the plated surface for a smooth, continuous, dense, adherent plate, free from pin holes, blisters, porosity and other harmful defects.

q. If the part will not be used immediately, slush it with corrosion preventive compound, Military Specification MIL-C-6529.

r. Place the part in a suitable container to eliminate the possibility of damage during subsequent handling. Prior to installation of the part in the engine, reinspect the lead plating. Slight staining or discoloration of the plated surface shall not be cause for rejection.

6-892. TIN PLATING.

6-892A. GENERAL. This instruction will provide a general procedure for electrodeposition of tin on a steel surface and is utilized primarily to alleviate corrosion and false brinneling on bearing races or for similar applications.

NOTE

Before replating any engine component it is necessary to strip all previous electrodeposits and other surface treatments from the basis metal. The following procedures are employed to strip deposits usually present on a surface where tin is likely to be recommended as a service reconditioning procedure or change.

6-893. DULITE STRIPPING PROCEDURE (STEEL).

a. Degrease the part in a vapor degreaser.

b. Immerse the part in stripping solution (Solution No. 35) for 90 - 120 seconds.

c. Rinse the part in cold water.

d. Scrub the part with finely powdered pumice, Federal Specification SS-P-821, and water. Brush scrub the surfaces in running tap water to remove pumice completely. Rinse the part in cold water and then in hot water and blow dry.

e. If the stripped part is not to be plated immediately, slush it with corrosion preventive compound, Military Specification MIL-C-6529.

6-894. LUBRIZE STRIPPING PROCEDURE (STEEL).

a. Place the part on a suitable rack or hook.

b. Degrease the part in a vapor degreaser.

c. Etch the part in a 20 per cent solution of chromic acid (Solution No. 28) for ten minutes. Maintain a solution temperature of 75° C (165° F) and agitate frequently.

d. Thoroughly rinse the part in hot water.

e. Immerse the part in a three per cent solution of sodium carbonate for one to two minutes. Employ agitation.

f. Rinse the part in hot water.

g. Scrub the part with pumice, Federal Specification SS-P-821, and a stiff bristly brush.

h. Thoroughly rinse the part in hot water.

i. If the stripped part is not to be plated immediately, slush it with corrosion preventive compound, Military Specification, MIL-C-6529.

NOTE

When using this procedure, it is recommended that controlled routing be employed to minimize any delay between steps in order to prevent rusting and staining. If the part has previously been tin flashed, remove the tin deposit as outlined in the following paragraph.

6-895. TIN STRIPPING PROCEDURE (STEEL).

a. Degrease the part in a vapor degreaser.

b. Immerse the part in tin stripping solution (Solution No. 9) until the tin is completely removed.

c. Make the part anodic. Use low voltage to apply not more than 25 amperes per square foot on the part. Usually two and one half to three volts is satisfactory.

d. Turn the parts during the stripping process, if necessary, to eliminate shielding or air pockets.

NOTE

If the tin on the part turns black, and does not strip, the voltage is set too high.

e. Rinse the part in cold water and then in hot water and blow dry.

f. If the stripped part is not to be plated immediately, slush it with corrosion preventive compound, Military Specification MIL-C-6529.

6-896. TIN PLATING PROCEDURE (STEEL).

a. Demagnetize the part if any residual magnetism is evident from previous reconditioning operations.

b. Degrease the part in a vapor degreaser.

c. Insulate the part if/as required.

d. Place the part in a suitable rack or hook.

e. Electroclean the part in anodic alkaline cleaner (Solution No. 36) for 90 -120 seconds.

f. Rinse the part in cold water.

g. Anodically etch the part in a 50 per cent solution of sulfuric acid (Solution No. 34) operated at room temperature, 30°C (86°F) maximum, at 200 - 400 amperes per square foot for three minutes.

h. Rinse the part thoroughly in cold water for 15 - 30 seconds.

i. Immerse the part in tin plating solution (Solution No. 27) and plate at 25 - 30 amperes per square foot until the required thickness is obtained. A plate thickness of 0.00005 inch requires approximately 39 seconds at 30 amperes per square foot.

j. Rinse the part in cold water and then in hot water and blow dry.

k. Bake the part at 115 - 126°C (240 - 260°F) for four hours in a suitable circulating air furnace.

l. Visually inspect the part for a smooth, even, tin flash free from blishters and flaking.

6-897. SPECIAL APPLICATIONS. Special applications will include application of Alodine to aluminum parts, chrome pickle treatment, synthetic resin coating of engine parts, and lubrizing of steel parts.

6-898. APPLICATION OF ALODINE TO ALUMINUM PARTS.

6-898A. GENERAL. The following instructions apply for touch-up of all aluminum parts machined, modified, or reconditioned, where original preservation (anodize) has been removed, and metal surfaces are exposed.

a. Degrease the part in a vapor degreaser.

NOTE

If the part is relatively free from soil, a solvent wipe with trichlorethylene, Military Specification MIL-T-7003, may be employed in lieu of vapor degreasing.

b. Pre-clean the affected area of the part by swabbing for five minutes, at room temperature, with a clean cloth saturated with deoxidizing solution composed of one pound of cleaner, Clepo 180S, and sufficient water to make one gallon.

c. Rinse the affected area of the part with cold running water before the solution dries. Blow the part dry or wipe dry with clean rags.

NOTE

Where the size of the part and/or irregular configuration make it impractical to rinse the part in cold running water, a flexible plastic water rinse bottle, with a suitable nozzle may be employed. If this rinse is not feasible, wipe the area with a clean, water saturated swab and re-wipe with a second unused water saturated swab. Discard the swabs after using.

d. Swab the affected area of the part for five minutes at room temperature with a clean cloth saturated with a solution composed of three ounces of Alodine No. 1200, 1/2 fluid ounce of concentrated nitric acid, and sufficient water to make one gallon.

NOTE

Quantities should be prepared in accordance with daily requirements to preserve effectiveness of the solutions. Prepare the solutions in earthenware containers and observe the necessary safety precautions in the handling of nitric acid.

e. Rinse the affected area, before the solution dries, with cold running water.

f. Blow the part dry or wipe dry with clean rags.

6-899. CHROME PICKLE TREATMENT.

6-899A. GENERAL. When the protective coating of dichromate on magnesium parts has been removed due to rework or other causes, the local area should be treated with a chrome pickle solution to provide corrosion resistance and maximum paint or synthetic resin adhesion.

6-900. CHROME PICKLE PROCEDURE.

a. Prepare the area to be treated by vapor degreasing or swabbing with trichlorethylene, Military Specification MIL-T-7003, to remove all contamination.

b. Apply the chrome pickle solution to the exposed surface by swabbing or brushing continuously for 90 - 120 seconds.

c. Overlap the surrounding area of original dichromate finish by one half to one inch with the solution to ensure coverage of the entire area.

d. Rinse the part thoroughly with clean running water and dry with clean, dry air under pressure.

e. The treated area should be painted or resin coated as soon as practical after operation.

6-901. CHROME PICKLE SOLUTION.

a. Prepare the solution in either a stainless tank or a tank lined with glass, ceramic, synthetic rubber or vinyl base material using the material outlined in the following list.

Ingredients	Quantity
Sodium Dichromate	1.5 Pounds
Nitric Acid	1.5 Pints
Water to make	1.0 Gallon

b. Operate the solution within a range of 21 - 32°C (70 - 90°F).

WARNING

Observe the necessary precautions when handling acid.

c. Add the nitric acid slowly with constant stirring, to one-half the required amount of water.

d. Add the sodium dichromate and stir until completely dissolved.

e. Add the water to make the required amount of the solution.

f. Maintain the solution utilizing one and one half pounds of sodium dichromate and one and one half pints of nitric acid per gallon.

6-902. DETERMINING SODIUM DICHROMATE CONTENT OF CHROME PICKLE SOLUTION.

a. Pipette one ml of chrome pickle solution into a 250 ml beaker containing 150 mls of distilled water.

b. Add five mls of concentrated hydrochloric acid, Federal Specification O-A-86, and five grams of potassium iodide. Allow at least two minutes for the reaction to take place.

c. Titrate with 0.1N sodium thiosulfate solution, then continue the titration until the purple starch iodine color disappears.

Calculation:

$$\text{ml 1N } Na_2S_2O_3 \cdot 5H_2O \times 0.0415 = \text{lbs per gal } Na_2CR_2O_7$$

6-903. DETERMINING NITRIC ACID CONTENT OF CHROME PICKLE SOLUTION.

a. Pipette one ml of chrome pickle solution into a 250 mls beaker containing 50 mls of distilled water.

b. Standardize a glass electrode equipped pH meter with a buffer solution of approximately 4.0 and immerse the glass electrode system in the solution.

c. Stir and titrate with 0.1N sodium hydroxide to a pH of 4.0 to 4.5.

Calculation:

$$\text{ml 0.1N NaOH} \times 0.0505 = \text{pts per gal } HNO_3.$$

6-904. SODIUM THIOSULFATE (0.1N) STANDARD. Dissolve 26 grams of sodium thiosulfate in hot distilled water, add one gram of sodium carbonate and dilute to one liter in a volumetric flask.

a. Weigh out 0.20 gram C.P. copper foil into a 250 ml beaker.

b. Dissolve in 50 ml 1:1 nitric acid.

c. When cool, add 10 mls of concentrated sulphuric acid, Federal Specification O-A-115, and heat on a plate to dense white sulphur trioxide fumes.

d. Cool and then wash down the sides of the beaker with distilled water and dilute to 100 ml.

e. Add 0.5 gram of potassium fluoride crystals.

f. Add ammonium hydroxide until the solution is deep blue.

g. Add concentrated nitric acid until the color changes to a light blue or bluish green.

h. Allow the solution to cool to room temperature and add three grams of potassium iodide crystals.

i. After standing for a few minutes, titrate the solution with sodium thiosulfate to a light yellow color.

j. Add two mls starch solution.

k. Titrate with sodium thiosulfate to flesh colored end point.

Calculation:

$$N = \frac{3.146}{\text{ml } Na_2S_2O_3 \cdot 5H_2O \text{ required for 0.020 gms Cu}}$$

6-905. SODIUM HYDROXIDE. Dissolve four grams C.P. sodium hydroxide in 100 mls of distilled water and then dilute to one liter in a volumetric flask. Standardize against a suitable acid.

6-906. STARCH SOLUTION.

a. Make a paste with six grams of soluble starch and 100 mls of distilled water.

b. Pour this mixture into a flask containing about 600 mls of boiling distilled water.

c. Add one gram of sodium hydroxide dissolved in 10 mls of water, three grams of potassium iodide crystals and a few crystals of phenol.

d. Boil for five minutes and dilute to 1000 mls.

6-907. EPOXIDE PHENOLIC RESIN COATING ENGINE PARTS.

a. Strip the resin coating at overhaul if it interferes with magnetic particle, fluorescent or non-fluorescent dye penetrant method of inspection, or if the coating has been damaged.

b. Strip coating from steel, magnesium and aluminum parts by immersing the parts in the stripping solution as outlined in this instruction.

NOTE

The stripping solution will also remove paint. Do not process painted parts through stripping solutions if removal of paint is not desired.

c. Coatings may also be stripped from parts by abrasive blasting. Aluminum oxide may be used wet (vapor blast) or as a dry blast to remove resin coating from steel parts. Utilize soft grit blast to remove the resin from parts made of aluminum or magnesium.

NOTE

Ensure that bearing inserts and finished surfaces are properly protected when utilizing abrasive blast material to remove the epoxide phenolic resin coating.

6-908. STRIPPING USING CHEMICAL SOLUTION.

a. Soak steel, magnesium or aluminum parts in Magnus 1100 stripper solution (Magnus Chemical Co., Garwood, N.J.) at an elevated temperature of 77 - 88°C (170 - 190°F) until the coating is completely lifted away from the base metal. Check periodically to determine the stripping progress of the solution.

NOTE

Magnus 1100 is a two layer stripper solution. The top layer is a special oil seal to prevent evaporation of the active solvents in the lower layer. Immerse parts entirely in the solvent layer. The seal layer is not designed to perform a stripping operation.

b. Pressure rinse with cold water.

c. Rinse in hot water 82 - 99°C (180 - 210°F) and blow dry.

d. Slush the parts with corrosion inhibiting oil.

NOTE

Turco 3823 (Turco Products, Inc., 24600 South Main Street, Wilmington, California) may be used as an alternate material in the preceding synthetic resin coating stripping procedure.

6-909. STRIPPING USING BLAST METHOD.

a. Degrease in trichlorethylene.

b. Mask areas not to be blasted, such as bearing inserts, studs, finished surfaces, etc.

c. Blast steel parts with wet or dry aluminum oxide, or equivalent, and blast magnesium or aluminum parts with soft grit (walnut shells, or equivalent) to remove the epoxide phenolic resin coating.

d. Pressure rinse with cold water.

e. Rinse in hot water at 82 - 99°C (180 -210°F) and blow dry.

f. Slush part with corrosion inhibiting oil.

NOTE

Painted surfaces may be affected by prolonged exposure to hot trichlorethylene. Do not subject painted parts to vapor degreasing unless removal of paint is desired.

6-910. PREPARATION OF PARTS FOR EPOXIDE PHENOLIC RESIN COATING.

a. Cleanliness is of the utmost importance to ensure satisfactory adhesion of the epoxide phenolic resin coating.

b. Small or localized areas in need of recoating should be thoroughly cleaned with clean thinner or acetone or spot blasted to provide the required clean surface.

c. Magnesium Parts. Thoroughly clean areas to be resin coated with clean thinner or acetone and blow dry with clean moisture free air.

6-911. STEEL PARTS WITH ALUMINUM OR LEAD-TIN PLATED DETAILS.

a. Degrease in vapor degreaser (trichlorethylene).

b. Air cool parts to room temperature.

c. Thoroughly clean surfaces to be resin coated with clean thinner or acetone.

d. Blow dry with clean moisture free air.

6-912. STEEL PARTS. Steel parts may be cleaned using one of the following appropriate processes with the shortest possible time lapse between operations of the process chosen.

a. Solvent Cleaning. Degrease in vapor degreaser (trichlorethylene) and air cool to room temperature. Thoroughly clean surfaces to be resin coated with clean thinner or acetone and blow dry with clean dry air.

b. Alkaline Cleaning. Degrease in vapor degreaser (trichlorethylene). Alkaline clean with soak type soap cleaner at 88 - 99°C (190 - 210° F). Rinse in water maintained between 49 - 66°C (120 - 150° F). Maintain the rinse below 0.05 per cent alkali calculated as NaOH. Dip in solution of one per cent by weight of chromic or phosphoric acid and rinse in water maintained between 88 - 99°C (190 - 210° F). Blow dry with clean moisture free air.

c. Abrasive Blasting. Degrease in vapor degreaser (trichlorethylene) and air cool parts to room temperature. Mask areas not to be blasted, such as bearing inserts, studs, finished surfaces, etc. Blast area to be resin coated with wet or dry aluminum oxide, or equivalent, and pressure rinse with cold water. Rinse in hot water at 82 - 99°C (180 - 210° F) and blow dry with clean moisture free air.

NOTE

After cleaning, handle parts so they will be free from dust and all traces of moisture. Do not touch surfaces to be resin coated except when wearing clean, lint free gloves.

6-913. APPLICATION OF EPOXIDE PHENOLIC RESIN.

a. General. Mask bearing inserts, journals, threads, etc. to prevent coating of these surfaces. Parts shall be coated by spraying; however, the resin may be brushed on if spraying is not practicable. After application of the resin, all parts shall be baked to cause complete polymerization of the coating.

b. Mixing. Prepare the epoxide phenolic resin mixture in accordance with the recommendations of the manufacturer. Only approved materials may be used. No more than a 48 hour supply shall be prepared at one time. The suggested mixture for resin coating is as follows:

Resin	12 Parts
Catalyst	1-1/2 Parts
Thinner MIBK (Methyl Isobutyl Ketone)	8 Parts

No. 2 Zahn Cup Viscosity 16 seconds Approximate

c. Application. Apply a light resin coat. Spray evenly on area to be coated ensuring that recess areas are covered. Air dry slightly (1/2 to 1 minute). Apply a light resin coat. Spray a second coat evenly in order to obtain a thickness of 0.0005 - 0.0010 inch on all surfaces being coated. Remove masking and clean off overspray with acetone. Bake all parts to cause complete polymerization of the coating in accordance with steps (6) and (7). Carburized parts having a hardness of Rc60 minimum shall be baked at 127 - 138° C (260 - 280° F) for a minimum of 3.5 hours at heat. All other parts shall be baked at a temperature between 127 - 210° C (260 - 410° F). Suggested minimum times at varying temperatures are as follows:

Temperature	Time
127 - 138° C (260 - 280° F)	3.5 hours
171 - 182° C (340 - 360° F)	2.0 hours
198 - 210° C (390 - 410° F)	0.5 hours

d. Quality. The coating shall cover the specified areas and be continuous, uniform and free from bubbles, fatty edges, pin holes, runs, sags and other imperfections detrimental to the performance of the part. Slight orange peel shall not be cause for rejection.

e. Underbake Test. Polymerized coatings on parts rubbed briskly for one minute with a clean white cloth saturated with acetone or similar solvent shall show no evidence of softening.

f. Overbake Test. Test a sample part, or panels representing parts coated in accordance with this instruction, for brittleness by scraping a knife blade over the surface of the part and observing any lack of adhesion or tendency to flake or chip. Coating on panel shall show no evidence of cracking or flaking when the panel is subjected to a 90 degree bend test. Color comparison standards may be prepared showing the minimum and maximum acceptable baking conditions.

g. Recoating and Repair. Unsatisfactory coating after baking may have the coating stripped, parts recleaned and recoated as outlined in this instructions. If the parts are unsatisfactorily coated before baking, the coating may be stripped with acetone or other suitable solvent.

h. Spotting. When coating damage consists of abrasions caused by handling and not by loss of adhesion of the resin coating, reconditioning shall be accomplished by thoroughly cleaning such areas with clean thinner or acetone, drying and applying the resin to the exposed metal by brush or spray. For reconditioning, since touch-up areas are relatively small, the required baking may be localized by employing the use of a heat lamp or equivalent.

6-914. RECONDITIONING WORN ENGINE PARTS BY PLASMA SPRAY.

6-914A. GENERAL. Plasma spray repair shall be performed in accordance with current specifications. Before application of new coating, all previously sprayed or plated coatings must be completely removed.

6-915. LUBRIZING STEEL PARTS.

6-915A. GENERAL. Lubrizing is usually recommended where slight chafing occurs. However, it will probably not eliminate severe chafing. The lubrized surface will efficiently retain a film of oil, where a plated surface, such as copper or lead, which is also used for anti-chafe purposes, will not. The lubrizing process consists of applying a non-metallic, finely crystalline phosphate coating on a steel surface. Lubrize may be stripped from the part with a suitable stripper and the part relubrized. When service experience indicates the need for a suitable surface treatment to alleviate a mild chafing condition, lubrizing may be recommended. However, an analysis of the part and its function must be made to determine if the required fits and clearances can be maintained.

CAUTION

The lubrize treatment causes a small dimensional growth of 0.0001 to 0.0002 inch on surface of part. A similar loss is experienced when stripping lubrize. This is an important factor when lubrizing parts with small dimensional tolerances.

6-916. LUBRIZE STRIPPING PROCEDURE.

NOTE

Prior to lubrizing a steel part, any previous lubrizing or plating must be removed.

a. Place the part on a suitable rack or hook.

b. Degrease the part in a vapor degreaser.

c. Etch the part in a 20 per cent solution of chromic acid for ten minutes.

d. Maintain a solution temperature of 74°C (165°F) and agitate frequently.

e. Rinse the part thoroughly in hot water.

f. Immerse the part in a three per cent solution of sodium carbonate for one to two minutes while agitating the solution.

g. Rinse the part in hot water.

h. Scrub the part with pumice, Federal Specification SS-P-821, and a stiff bristle brush.

i. Rinse the part thoroughly in hot water.

j. Slush the part with corrosion preventive compound, Military Specification MIL-C-6529.

NOTE

When using this procedure it is recommended that controlled routing be employed to minimize any delay between steps in order to prevent rusting and staining.

6-917. LUBRIZE PROCEDURE.

a. Place the part on a suitable rack or hook.

b. Degrease the part in a vapor degreaser.

c. Insulate the part if/as required with stop-off lacquer, Unichrome 323.

d. Wipe the entire area to be lubrized with a clean cloth dampened with water.

NOTE

Do not hesitate between steps e and f.

e. Immerse the part in lubrize solution (Solution No. 42) for at least six minutes.

NOTE

Do not immerse the part for any excessive length of time since undesirable pitting on the uninsulated surfaces may result.

f. Rinse the part in cold water for one minute.

g. Remove the insulation applied.

h. Slush the part in soluble oil (Solution No. 43) and shake off excess oil.

i. Slush the part with corrsion preventive compound, Military Specification MIL-C-6529.

6-918. LUBRIZE EQUIPMENT. Size of various solution containers is dependent upon the expected volume of work. The tank should be constructed from welded stainless or stainless clad sheet metal. The tank should be of such depth as to allow complete immersion of any parts to allow 15 inches clearance with bottom of tank. Provide a source of heat to maintain solution at a temperature of 99°C (210°F). One source is steam heating coils of iron pipe suspended along one or more sides of the tank so that they are readily removable for cleaning. The lower loop should not be closer than six inches to the bottom. Connect coils through a thermostatic control valve to a pressure steam line. Provide a means of measuring the solution temperature. It is recommended that fumes from the solution be removed from the atmosphere with an exhaust system. Water must be available for preparation of the solution. Water tanks may be constructed of steel or any suitable material with heating provisions when necessary.

6-919. SOLUTIONS AND MIXING PROCEDURES.

NOTE

All solutions are maintained at room temperature under local control unless otherwise stated.

6-920. SOLUTION NO. 1 (CADMIUM STRIP).

Ingredients	Quantity
Ammonium Nitrate	13 ounces
Water to make	1 gallon

a. Fill the tank to about 2/3 its capacity with water; add the ammonium nitrate while stirring the water until it completely dissolves. Add the balance of water to bring the bath to operating level.

b. Discard the solution and make a new bath when stripping time becomes excessive or when work becomes covered with a brown smut.

6-921. SOLUTION NO. 2 (CHROMIUM STRIP, STEEL PARTS).

Ingredients	Quantity
Caustic Soda	1 pound
Water to make	1 gallon

a. Fill the tank to about 2/3 its capacity with water, and add the caustic soda slowly, stirring constantly until it is completely dissolved. Add the balance of water to bring to operating level.

b. Discard the solution and make a new bath, when stripping time becomes excessive.

6-922. SOLUTION NO. 3 (CHROMIUM STRIP, COPPER ALLOY PARTS).

Ingredients	Quantity
Muriatic Acid	0.85 gallon
Water to make	1 gallon

a. Fill the tank to about 1/10 its working capacity with water; add the acid to the water and stir slowly.

CAUTION

Observe the necessary safety precautions in handling acids.

b. Discard the bath when stripping time becomes excessive, and make up a new bath.

6-923. SOLUTION NO. 4 (SILVER STRIP, STEEL PARTS).

Ingredients	Quantity
Sodium Cyanide	8 ounces
Sodium Carbonate	2 ounces
Water to make	1 gallon

a. Fill the tank to about 2/3 its working capacity with water. Add the ingredients in the order given, stirring and dissolving each completely before adding the next. Add the balance of water to bring the bath to operating level.

b. Do not make any additions of water to this bath. Discard the bath when the stripping time becomes excessive. Solution agitation is recommended for stripping efficiency and may be accomplished either mechanically or by use of compressed air.

c. Make up losses due to drag-out by adding the required amount of solution of base composition.

6-924. SOLUTION NO. 5 (LEAD-TIN, LEAD-INDIUM AND LEAD STRIP).

Ingredients	Quantity For One Liter	Quantity For One Gallon
Hydrogen Peroxide (100 vol.)	50 mls	190 mls
Glacial Acetic Acid	50 mls	190 mls
Water	900 mls	3420 mls

a. Add the required amount of water to the container. Add the other ingredients, stirring thoroughly while making the additions. The solution is now ready for use.

b. When the stripping rate decreases after use, add small quantities of hydrogen peroxide to increase the rate.

c. Discard the solution and make up a new bath when stripping time becomes excessive.

6-925. SOLUTION NO. 6 (LEAD-TIN STRIP ENTHONE).

Ingredients	Quantity
Enthone Lead-Tin Stripper	1.5 pounds
Water to make	1 gallon

a. Fill the tank or container to about 2/3 its working capacity with cold water. Add the enthone stripper and stir with an iron paddle. Add sufficient water to the solution to obtain operating level.

b. When the stripping time increases by 25 per cent, add eight ounces per gallon of the enthone stripper.

c. Discard the solution after several additions have been made and make a new bath. Agitation of the work of the solution may accelerate the stripping action.

d. Maintain the solution as follows.

Temperature	82 - 93°C (180 - 200°F)
Control	Local

6-926. SOLUTION NO. 7 (NICKEL STRIP, ENTHONE).

Ingredients	Quantity
Enthone Metal Stripper A	1.25 pounds
Water to make	1 gallon

CAUTION

This solution is to be used for stripping nickel from steel only. The material contains cyanides and, therefore, ventilation is necessary to carry off fumes. The stripper decomposes on standing, whether it is being used or is idle. After about 18 or 24 hours it can be strengthened by adding one pound of stripper per gallon of solution. After that the bath should be discarded. Work should be accumulated until there is enough to justify making up a bath. In the dry state, the stripper must not come in contact with heat, flame, acids, or organic materials such as carbon, paper and cloth, as they may burn. If the steel is etched by the stripping solution, discard the bath.

a. Fill the container to about 3/4 its capacity with water. Add the stripper, stirring with a steel paddle until the stripper is completely dissolved.

b. Add the water to obtain operating level. Heat to the required operating temperature and the solution is ready.

c. Maintain the solution as follows.

Temperature	71 - 82°C (160 - 180°F)
Control	Local

6-927. SOLUTION NO. 8 (NICKEL STRIP, NITRIC ACID).

Ingredient: Nitric Acid, Concentrated

WARNING

Observe the necessary safety precautions in acid handling. Suitable draft ventilation should be provided for the container as toxic nitrogen oxide fumes are evolved during the stripping operation.

a. Fill the container to its working capacity with concentrated nitric acid.

b. Keep a cover on the container when not in use to avoid possible contamination with water.

c. Discard when stripping time becomes excessive.

6-928. SOLUTION NO. 9 (TIN STRIPPING).

Ingredients	Quantity
Caustic Soda	1 pound
Water to make	1 gallon

a. Fill the tank to about 2/3 its capacity with water. Add the caustic soda slowly while stirring until completely dissolved. Add the balance of water to bring the bath to operating level. Discard and renew the bath when stripping time becomes excessive.

6-929. SOLUTION NO. 10 (COPPER STRIKE).

Ingredients	Quantity
Sodium Cyanide	4.75 ounces
Copper Cyanide	3.5 ounces
Sodium Carbonate	2.0 ounces
Sodium Hydroxide	2.0 ounces
Water to make	1 gallon

a. Fill the tank to about 2/3 its working capacity with water and heat to about 60°C (140° F). Add the ingredients in the order shown. Dissolve each ingredient completely before adding the next. Add water to raise the solution to operating level and heat to the required operating temperature.

b. Hang copper anodes on the anode rail, and a dummy on the cathode rail. Electrolyze at a low current density for a few hours. Filter the solution immediately after it is made and continuously while in use.

c. Maintain the solution as follows.

Ingredients	Quantity
Copper Metal	2.0 - 3.0 ounces/gallon
Free Sodium Cyanide	1.0 - 2.0 ounces/gallon

Ingredients	Quantity
Caustic Soda	1.5 - 2.5 ounces/gallon
Carbonates	10 ounces/gallon (max.)
Temperature	65°C (150°F)
Control	Laboraroty

NOTE

To make an addition of sodium cyanide only, place the sodium cyanide in a clean metal basket and suspend it from the cathode bar so that the cyanide is submerged under the solution. Allow it to remain in this position until the cyanide is completely dissolved. Care must be taken that no current flows through the tank while the basket is suspended. To make an addition of both copper cyanide and sodium cyanide, remove a quantity of plating solution, sufficient to dissolve the required amount of sodium cyanide, from the plating tank and transfer it to the mixing tank. The solution may be heated to 65°C (150°F), to facilitate the solution of the required materials. Dissolve the sodium cyanide either by suspending from a clean basket, or by adding to the mixing tank and stirring until completely dissolved. Add the required amount of copper cyanide slowly, while stirring, to the sodium cyanide solution and continue until the copper salt is completely dissolved. Copper cyanide will not dissolve in water alone. Transfer the solution back into the plating tank. Do not make additions while work is in the tank.

d. Discard the bath when carbonates exceed 10 ounces per gallon. Analyze the bath for carbonates semi-monthly. Semi-weekly analyze for copper, free cyanide and caustic soda.

6-930. SOLUTION NO. 11 (COPPER STRIKE).

Ingredients	Quantity
Sodium Cyanide	6.5 ounces/gallon
Copper Cyanide	5.5 ounces/gallon
Sodium Carbonate	4.0 ounces/gallon
Rochelle Salts	8.0 ounces/gallon

a. Fill the tank to about 2/3 its working capacity with water and heat to 40°C (105°F). Add the ingredients in the order shown. Dissolve each ingredient before adding the next. Add water to raise the solution to operating level.

b. Hang copper anodes on the anode rail and a dummy on the cathode rail. Electrolyze at a low current density for a few hours. Filter and the solution is ready for use.

c. Perform a semi-weekly analysis of all ingredients except carbonates, which shall be subject to analysis weekly.

d. Maintain the solution as follows.

Ingredients	Quantity
Copper Metal	3.9 ounces/gallon
Free Sodium Cyanide	0.5 ounces/gallon
Carbonates	7.0 ounces/gallon (max.)
pH (check daily)	10.2 - 10.5

NOTE

To make an addition of sodium cyanide only, place the sodium cyanide in a clean metal basket and suspend it from the cathode bar so that the cyanide is submerged under the solution. Allow it to remain in this position until the cyanide is completely dissolved. Care must be taken that no current flows through the tank while the basket is suspended. To make an addition of both copper cyanide and sodium cyanide, remove a quantity of plating solution, sufficient to dissolve the required amount of sodium cyanide, from the plating tank and transfer it to the mixing tank. The solution may be heated to 40°C (105°F), to facilitate the solution of the required materials. Dissolve the sodium cyanide either by suspending it from a clean basket, or by adding to the mixing tank and stirring until completely dissolved. Add the required amount of copper cyanide slowly, while stirring, to the sodium cyanide solution and continue until the copper salt is completely dissolved. Copper cyanide will not dissolve in water alone. Transfer the solution back into the plating tank. Do not make additions while work is in the tank.

Temperature	37 - 43°C (100 - 110°F)
Control	Laboratory

(Discard the solution when carbonates exceed 7.0 ounce per gallon).

6-931. SOLUTION NO. 12 (NICKEL STRIKE).

Ingredients	Quantity
Nickel Sulface	30 ounces
Boric Acid	5 ounces
Nickel Chloride	8 ounces
Water to make	1 gallon
pH	2.0 - 3.0
Hydrogen Peroxide	As required

a. Fill the tank to about 2/3 its working capacity with water. The water may be heated tc about 65°C (150°F) to facilitate solution of the required materials.

b. Add the ingredients in the order as shown with constant stirring. Dissolve each ingredient completely before adding the next.

c. Hang bagged nickel anodes on the anode rail, and a steel dummy on the cathode rail. Electrolyze at a low current density for a few hours.

d. Filter; adjust pH to 2.0 - 3.0. Provide the solution with continuous filtration.

e. Clean the tank every three months.

f. Perform a weekly analysis of nickel sulfate and nickel chloride and a monthly analysis of boric acid. Determine pH daily and maintain at 2.0 - 3.0.

g. Maintain the solution as follows.

Ingredients	Quantity
Nickel Sulfate	27 - 32 ounces/gallon
Boric Acid	4 - 6 ounces/gallon
Nickel Chloride	6 - 10 ounces/gallon
Temperature	40 - 46°C (105 - 115°F)
Control	Laboratory

6-932. SOLUTION NO. 13 (WOOD'S NICKEL STRIKE).

Ingredients	Quantity
Nickel Chloride	32 ounces
Muriatic Acid	16 fluid ounces
Water to make	1 gallon

a. Fill the tank to about 2/3 its working capacity with water. Disslove the nickel chloride. Add the muriatic acid, stir and add water to bring the bath to operating level. Thoroughly mix and filter the solution.

b. Clean the nickel anodes, bag them and suspend along the rail. The solution is now ready for use.

c. Maintain the solution as follows.

Ingredients	Quantity
Nickel Chloride	32 ounces/gallon
Muriatic Acid	16 fluid ounces/gallon
Temperature	Room
Control	Laboratory

NOTE

To make additions to the solution, dissolve the required quantity of nickel chloride in hot water. Add the solution to the plating tank. Stir and add the muriatic acid. Thoroughly mix and filter the solution. Allow to stand from 30 - 60 minutes before using.

6-933. SOLUTION NO. 14 (SILVER STRIKE).

Ingredients	Quantity
Potassium Cyanide	20.1 ounces
Silver Cyanide	0.4 ounces
Sodium Carbonate	2.0 ounces
Water to make	1 gallon

a. Fill the tank to about 2/3 its working capacity with water. Add the ingredients in the order shown, while stirring constantly. Dissolve each ingredient completely before adding the next. Add water to bring the solution to operating level. Filter the solution after make up, and continuously while in use.

b. Hang stainless steel anodes and one silver anode on the anode rail, and a dummy cathode on the cathode rail.

c. Electrolyze the bath for a few hours. The solution is now ready for use.

d. Perform an analysis of silver cyanide and free potassium cyanide three times a week. Employ continuous filtration and clean the tank monthly. Discard the solution when carbonates reach 15 ounces per gallon.

e. Maintain the solution as follows.

Ingredients	Quantity
Silver Cyanide	0.38 - 0.45 ounces/gallon
Free Potassium Cyanide	19.0 - 21.0 ounces/gallon
Temperature Control	Room Laboratory

NOTE

To make additions to the silver strike bath remove a quantity of the plating solution, sufficient to dissolve the required amount of potassium cyanide from the plating tank and transfer it to a mixing tank. Add the weighed amount of potassium cyanide to the mixing tank and stir until it is completely dissolved. Add the required amount of silver cyanide slowly, while stirring to this solution. Continue stirring until completely dissolved. Silver cyanide will not dissolve in water alone. Transfer the solution into the plating tank, and filter. Do not make additions while work is in the tank.

6-934. SOLUTION NO. 15 (ZINC IMMERSION).

Ingredients	Quantiry
Caustic Soda	70 ounces/gallon
Zinc Oxide	13 ounces/gallon
Ferric Chloride Crystals	0.13 ounces/gallon
Rochelle Salts	1.3 ounces/gallon

a. Fill the tank or container to about 2/3 its working capacity with water. Dissolve the caustic soda and add the zinc oxide, stirring constantly. Allow the solution to cool to room temperature.

b. In a separate container, make up a water solution of the ferric chloride crystals and Rochelle salts. Add this to the bath with constant stirring.

c. Raise the solution to the required operating level by adding water and the solution is ready for use.

NOTE

The specific gravity of the solution should average 1.4 pH for a new solution and should be checked semi-weekly. A decrease in the specific gravity will necessitate adding more of the components. Remove a quantity of the bath and dissolve the required amount of ingredients. Transfer the addition back to the tank and stir thoroughly. Since the zincate solution is very viscous, losses in volume occur largely from drag-out. This condition should be corrected by the addition of more solution of the specified composition.

d. Maintain the solution at room temperature and under laboratory control.

6-935. SOLUTION NO. 16 (CADMIUM PLATE).

Ingredients	Quantity
Sodium Cyanide	12.0 ounces
Cadmium Oxide	3.5 ounces
Caustic Soda	1.0 ounce
Brightener	0.04 ounce
Water to make	1 gallon

a. Fill the tank about 2/3 full with water. Add the ingredients in the order as shown, with constant stirring. Dissolve each ingredient completely before adding the next. Raise the solution to the required operating level by adding water.

b. Hang cadmium anodes on the anode rail, and a dummy on the cathode rail. Electrolyze at a low current density for a few hours. The solution is now ready for use.

c. Perform a weekly analysis of cadmium metal and total cyanide and a monthly analysis of carbonate.

d. Maintain the solution as follows.

Ingredients	Quantity
Cadmium Metal	3.0 ounces/gallon
Total Cyanide	12.0 ounces/gallon
Carbonate	10.0 ounces/gallon (max.)
Brightener	As required
Temperature	Room
Control	Laboratory

NOTE

To make additions of sodium cyanide only, place the sodium cyanide in a clean metal basket. Suspend the basket from the cathode bar so that the cyanide is submerged under the solution. Allow it to remain in this position until the cyanide is completely dissolved. Care must be taken so that no current flows through the tank while the basket is suspended. To make additions of cadmium oxide and sodium cyanide, remove a quantity of plating solution, sufficient to dissolve the required amount of sodium cyanide, from the plating tank and transfer it to a mixing tank. This solution may be heated to 65°C (150°F) to facilitate the solution of the required materials. Dissolve the sodium cyanide either by suspending from a clean basket or by adding to the mixing tank and stirring until the solution is complete. Add the required amount of cadmium oxide slowly while stirring, to this cyanide solution, and continue stirring until the oxide is completely dissolved. Cadmium oxide will not dissolve in water alone. Transfer the solution back into the plating tank. Do not make additions while work is in the tank.

6-936. SOLUTION NO. 17 (CHROMIUM-PLATE).

Ingredients	Quantity
Chromic Acid	33.0 ounces
Sulfuric Acid	0.33 ounces
Water to make	1 gallon

a. Fill the container to about 2/3 its capacity with water and heat to 54°C (130°F). Add the chromic acid, stirring constantly until it is completely dissolved.

b. Slowly add the required quantity of sulfuric acid, stirring constantly and observing the necessary precaution when handling acid. Add water to raise the solution to operating level and heat to the required temperature.

c. Set up a dummy lead anode and lead cathode, both about one square foot each and condition the solution by electrolyzing for four hours. The solution is now ready for use.

d. Perform a weekly analysis of chromic acid in the solution.

e. Maintain the solution as follows.

Ingredients	Quantity
Chromic Acid	33.0 ounces/gallon
Sulfates	0.33 ounces/gallon
Temperature	54 - 60°C (130 - 140°F)
Control	Laboratory

NOTE

To make additions of chromic acid, dissolve the required quantity of chromic acid in as little warm water as possible and add it to the plating bath. Add the required quantity of sulfuric acid directly to the bath. Stir the solution thoroughly after each addition.

6-937. SOLUTION NO. 18 (COPPER PLATE, ACID).

Ingredients	Quantity
Copper Sulfate	28 ounces/gallon
Sulfuric Acid	7 ounces/gallon
Water to make	1 gallon

a. Fill the tank to about 2/3 its working capacity with water. Add the required amount of sulfuric acid, stirring while making the addition. Add the copper sulfate and stir until completely dissolved. Bring the bath to the proper operating level with water. The bath is now ready for use.

b. Maintain the solution as follows.

Ingredients	Quantity
Copper Sulfate	28 - 32 ounces/gallon
pH (employ regular pH paper)	0.4 - 0.8
Temperature Control	Room Laboratory

NOTE

When in operation, the acid copper bath will tend to build-up in copper content and decrease in acid content. This tendency can be alleviated by removing the anodes when the bath is inoperative. To correct this condition, discard a portion of the bath and add sulfuric acid to make-up water.

6-938. SOLUTION NO. 19 (COPPER PLATE, ROCHELTEX).

Ingredients	Quantity
Potassium Cyanide	14.0 ounces
Copper Cyanide	7.2 ounces
Caustic Potash	2.0 ounces
Rocheltex	0.07 gallon
Water to make	1 gallon

a. Fill the tank to about 3/4 its working capacity with water and heat to 43 - 54°C (110-130°F). Add the ingredients in the order shown previously with constant stirring. Dissolve each ingredient completely before adding the next. Raise the solution to the required operating level by adding water.

b. Hang copper anodes on the anode rail, and a dummy on the cathode rail. Electrolyze at a low current density for a few hours. Filter, and the solution is ready.

c. Perform a semi-weekly analysis for copper, free cyanide, caustic potash, pH and Rocheltex. Perform a semi-monthly analysis for carbonates. Filter the solution continuously and filter through activated carbon once a month. Analyze and replenish Rocheltex after carbon treatment.

d. Maintain the solution as follows:

Ingredients	Quantity
Copper Metal	4.5 - 5.6 ounces/gallon
Free Potassium Cyanide	1.0 - 2.0 ounces/gallon
Caustic Potash	1.5 - 2.5 ounces/gallon
Rocheltex	6.0 - 10.0 per cent by volume
pH	12.0 - 13.0
Carbonates	10.0 ounces/gallon
Temperature	71°C (160°F)
Control	Laboratory

NOTE

To make additions of potassium cyanide, place the potassium cyanide in a clean metal basket. Suspend the basket from the cathode bar so that the cyanide is submerged under the solution. Allow it to remain in the position until the cyanide is completely dissolved. Care must be taken that current does not flow through the tank while the basket is suspended. To make additions of potassium cyanide and copper cyanide, remove a quantity of plating solution from the plating tank, sufficient to dissolve the required amount of potassium cyanide, and transfer it to a mixing tank. The solution may be heated to 57 - 62°C (135 - 145°F) to facilitate the solution of the required materials. Dissolve the potassium cyanide either by suspending from a clean basket, or by adding to the mixing tank and stirring until the solution is complete. Add the required amount of copper cyanide slowly with stirring, to the potassium cyanide solution and continue stirring until the copper salt is completely dissolved. Copper cyanide will not dissolve in water alone. Transfer the solution back into the plating tank through a filter. Do not make any additions while work is in the tank. Keep the anode rails full.

6-939. SOLUTION NO. 20 (COPPER PLATE, HIGH SPEED).

Ingredients	Quantity
Caustic Potash	4 ounces
High Speed Copper Plating Salts	36 ounces
Anti-Pit Agent	4 mls
Water to make	1 gallon

a. Fill the tank to about 2/3 its working capacity with water and heat to approximately 65°C (150°F). Add the caustic potash and the plating salts with constant stirring. Dissolve each ingredient completely before adding the next.

b. Mix the anti-pit agent with an equal volume of water and add to the solution. Raise the solution to the required operating level by adding water.

c. Hang as many copper anodes in the tank as possible and allow the bath to rise to operating temperature. The solution is now ready for use.

d. Employ a continuous filtering system and clean the tank every three months.

e. Perform a semi-weekly analysis of all ingredients except carbonates, which shall be subject to analysis semi-monthly. Discard the solution when carbonates exceed 10.0 ounces per gallon. Standard additions of anti-pit agent are to be authorized by the laboratory.

f. Maintain the solution as follows:

Ingredients	Quantity
Copper Metal	9.0 - 12.0 ounces/gallon
Free Sodium Cyanide	1.0 - 1.5 ounces/gallon
Caustic Potash	3.5 - 9.0 ounces/gallon
Carbonates	10 ounces/gallon (max.)
Temperature Control	82°C (180°F) Laboratory

NOTE

To make additions of sodium cyanide, place the sodium cyanide in a clean metal basket. Suspend the basket from the cathode bar so that the cyanide is submerged under the solution. Allow it to remain in this position until the cyanide is completely dissolved. Care must be taken that current does not flow through the tank while the basket is suspended. To make additions of high speed plating salts and caustic potash, remove a quantity of the plating solution from the plating tank, sufficient to dissolve the required amount of ingredients, dissolving each completely before adding the next. When the salts and caustic potash are completely dissolved, transfer the solution back to the plating tank. To make additions of anti-pit agent, dilute with an equal volume of water, mix thoroughly and add directly to the plating tank. Do not make any addition while work is in the tank.

6-940. SOLUTION NO. 21 (LEAD PLATE).

Ingredients	Quantity
Boric Acid	0.94 ounces
Lead Fluoborate Concentrate	*39.0 fluid ounces
Fluoboric Acid	4.6 fluid ounces
Glue	0.067 ounces
Water to make	1 gallon

*30 fluid ounces concentrate per gallon = 20.55 ounces metal per gallon

a. Fill the container to about 1/2 its working capacity. Dissolve the boric acid in hot water and add to the container.

b. Add the lead fluoborate concentrate and then the fluoboric acid, stirring after each addition.

c. Soak the glue in cold water for 2 - 3 hours, then heat approximately one hour until a satisfactory dispersion is obtained and add it to the solution. Add water to obtain the operating level and stir thoroughly.

d. Allow the solution to stand for at least two hours and then filter. The solution is now ready to use.

NOTE

Lead anodes should be removed from the anode rails when no plating is being accomplished in the container. The anodes should be cleaned by scrubbing with a bristle brush before being inserted in the container, to remove the smut formed during the plating cycle and to prevent contamination of the solution with foreign material.

e. Check the specific gravity of the solution twice a week using a hydrometer and maintain between 22 - 26 degrees Baume' in accordance with the tabulation listed under solution analysis procedure No. 10. If the reading is below 22 degrees, add sufficient lead fluoborate concentrate to adjust the gravity within specified limits. If above 26 degrees, add water to bring the solution within the proper range.

f. Maintain a pH of 1.0 - 1.5 and check at least once a week. If the pH is within limits but the solution is cloudy due to lead fluoride precipitate, take two ounces of boric acid for each gallon of solution, dissolve the boric acid in hot water, and add to the solution. Perform a complete solution analysis as required.

g. Maintain the solution at room temperature and under laboratory control.

6-941. SOLUTION NO. 22 (LEAD-TIN PLATE).

Ingredients	Quantity	
	Per Liter	Per Gallon
Boric Acid	11.0 grams	1.47 ounces
Lead Fluoborate Concentrate	175.7 ml	22.60 fluid ounces
Fluoboric Acid 48 per cent	101.6 ml	13.30 fluid ounces
Tin Fluoboric Concentrate	21.4 ml	2.75 fluid ounces
Powdered Peptone	2.0 grams	0.26 ounces
Water to make	1.0 liter	1.00 gallon

a. Fill the mixing tank with de-ionized water to about 1/2 the quantity to be mixed. Add the ingredients in the order listed, except the powered peptone, with constant stirring. Carbon treat using Darco G-60 silico-free carbon at a ratio of 4 - 5 pounds per 100 gallons of solution. Bring the solution to the quantity being made with de-ionized water and stir the treated solution occasionally for two hours. While the solution is being carbon treated, the plating tank should be thoroughly cleaned.

NOTE

To assure purity of the plating solution, it is necessary to use de-ionized water and carbon treat the solution.

b. Filter the solution using an air free filter that has no metal parts exposed to the solution. Continue to filter the solution in the mixing tank until all traces of carbon have been removed and the filtered solution is running clear and clean. Transfer the discharge hose into the cleaned plating tank and fill to the working level. Add the required amount of clear peptone solution.

c. Hang a bag of boric acid in the corner of the plating tank and allow the acid to slowly dissolve. Keep a constant boric acid supply in the bag.

NOTE

When bags are used, they must be Dynel or Vinyon and boiled to remove lint and foreign matter prior to use.

d. Maintain the solution as follows.

Ingredients	Quantity	
	Per Liter	Per Gallon
Stannous Tin	3.75 - 9.00 grams	0.5 - 1.2 ounces
Lead	60.0 - 105.00 grams	8.0 - 14.0 ounces
Fluoboric Acid	37.5 - 75.00 grams	5.0 - 10.0 ounces
pH	0.5 maximum	
Addition Agent	As required	

e. Solution control analysis.

Lead Fluoborate	once a week
Stannous Tin	twice a week
Fluoboric Acid	once a week
Alloy Deposit	once a day (When tank is in use)

NOTE

The alloy deposit must contain 6.0 - 9.5 per cent tin.

f. Filtration and agitation of the solution shall be performed when deemed necessary, but in no case shall the filtration frequency be less than two hours during each calendar day of operation.

g. Carbon treat and filter the plating solution into a clean tank every three months, or as deemed necessary, using Darco G-60 carbon.

h. Carbon treat and filter all new additions to the plating tank except peptone.

6-942. SOLUTION NO. 23 (ELECTROLESS NICKEL, ACID, CAHILL BATH).

Ingredients	Quantity	
	fluid ounces	ml/gallon
Nickel Metal	7.04	208
Glycolate	17.28	511
Activator	3.84	133
Water	99.84	2953

a. Fill the tank to about 2/3 its capacity with water, and heat the water to approximately 71°C (160°F). Add the other ingredients in the aforementioned order and stir until the solution is thoroughly mixed. Add the balance of water to operating level and allow the tank to come up to operating temperature.

b. After the proper dilution of the plating solution bring the bath to 88 - 93°C (190 - 200°F). Check the pH of the hot solution with regular pH paper. The pH should be 4.8 - 5.5.

c. If the pH is low, bring it up carefully with the alkaline adjustor which is a 20 per cent solution of sodium hydroxide (26.8 ounces per gallon). Add the alkaline adjustor slowly and carefully. Stir in thoroughly to completely dissolve the precipitate that will form momentarily. If the pH is appreciably over 5.5, the precipitate which formed on the alkaline addition must be redissolved before the bath may be used. The pH may be lowered, if over 5.5 by the slow addition, while stirring, of muriatic acid.

CAUTION

Muriatic acid reacts very rapidly. Smaller additions are required for a pH change than for the alkaline agent. For this reason add muriatic acid cautiously.

d. Shortly before operation of the bath, activate the solution with one gallon of activator mixed with an equal amount of water. Add slowly while stirring. After the addition of the activator solution, it may be necessary to readjust the pH to the operating range.

e. As bath constituents become gradually depleted, it is necessary to make additions of nickel, glycolate and activator to the bath in order to maintain the solution. The recommended additions are as follows:

Ingredients	Quantity
Activator	66 mls
Nickel Metal	25 mls
Glycolate	25 mls
Water	116 mls

f. These additions are based on one square foot of plating area for a period of one half hour. For maximum efficiency, additions should be made continuously. If batch additions are desired, they should be made at not more than 15 minutes intervals with 1/2 the foregoing indicated rate.

g. Maintain the solution as follows:

Ingredients	Quantity
Nickel Metal	7 - 9 grams/liter
pH at 4.8 - 5.5 solutions to be tested and adjusted prior to each batch load	
Laboratory analysis for nickel metal twice daily	
Temperature	88 - 93°C (190 - 200° F)
Control	Laboratory and Local

h. It is desirable to operate the batch continuously. In the event that the bath is idle for 24 hours or more, it will be necessary to reactivate with an amount of activator equivalent to approximately half that required to activate the original bath.

i. After extended usage of the bath, the concentration of reaction products will increase until the deposition rate is affected. It is advisable at this time to deplete the metal content of the bath before discarding. The metal content may be depleted by continuing operation of the bath for some time without additions of nickel, metal and glycolate.

j. It is important that a cover be kept over the tank at all times to exclude dirt. Contamination of the solution may initiate a plating action and lead to a waste of nickel metal content thereby causing rough deposits on the work.

NOTE

In the event that excessively rough deposits are encountered, or if nickel or other particles are observed in the bath, the solution shall be transferred to a holding tank, the plating tank cleaned with a 35 per cent nitric acid solution and the nickel solution filtered back into the plating tank. The solution shall then be readjusted for nickel content and pH.

6-943. SOLUTION NO. 24 (ELECTROLESS NICKEL PLATE, ALKALINE BATH).

Ingredients	Quantity
Ammonium Chloride	3.35 ounces
Sodium Citrate	13.4 ounces
Nickel Chloride	4.02 ounces
Water to make	1 gallon

a. Fill a 20 gallon stone or Kel-F container about 1/2 its working capacity with water. Add the ammonium chloride and allow to dissolve; add the sodium citrate and allow to dissolve.

b. Dissolve the nickel chloride in about five gallons of water, filter into another five gallon jar, using a glass funnel and filter paper. Then using a clean filter paper, filter into the container containing the ammonium chloride sodium citrate solution.

c. Raise the solution to the required operating level with water and stir thoroughly. Keep the container covered.

NOTE

For addition ingredients, (sodium hypophosphite and ammonium hydroxide) quantity used, and the procedure, refer to procedure for electroless nickel, paragraph 6-872.

6-944. SOLUTION NO. 25 (NICKEL SULFAMATE PLATE).

Ingredients	Quantity
Nickel Sulfamate Solution	1 gallon
Nickel Metal	11 ounces/gallon
Boric Acid	5.0 ounces/gallon
pH	3.5 - 4.5

NOTE

Nickel sulfamate plating solution is received ready mixed and purified. It is ready for use except that the full amount of boric acid may not be present, in cold weather at least, because of the tendency to crystallize out.

a. Fill the plating tank to operating level with the plating solution, mix thoroughly and submit to laboratory for a check of composition.

b. Hang bagged nickel anodes on the anode rail and a dummy on the cathode rail. Electrolyze at a low current density of 5 - 15 amperes per square foot for a few hours. Adjust the pH to 3.5 - 4.5 and filter.

c. Check for surface tension with two circular loops of clean wire, one of which is three inches in diameter and the other is five inches in diameter. When immersed and withdrawn slowly from the solution in a vertical plane the three inch ring should retain a complete film of solution, but the film should break on the five inch ring.

d. The amount of wetting agent to be added must be determined by experience. In case the five inch ring retains a complete film the excess wetting agent may be removed by treatment with activated carbon, followed by the addition of the proper amount of the wetting agent and a check on the stress level of the deposit, using the spiral contractometer.

e. The deposit shall be in compression, 5,000 - 10,000 psi, if not, add stress reducing reagent. If in excess of the foregoing figure this reagent may be removed with carbon filtration.

f. Maintain the solution as follows.

Ingredients	Quantity
Nickel Concentration	10.0 - 12.0 ounces/gallon
Boric Acid	5.0 ounces/gallon (min.)
pH	3.5 - 4.5
Stress level in deposit in compression	5,000 - 10,000 psi
Wetting agent as per ring test	
Temperature	54 - 60°C (130 - 140°F)
Control	Laboratory

NOTE

Maintain the solution by a daily check of the pH and ring test, a weekly analysis of nickel concentration and stress level of deposit, and a monthly analysis for boric acid. Employ continuous filtration of the solution and clean the tank every three months.

6-945. SOLUTION NO. 26 (SILVER PLATE).

Ingredients	Quantity
Potassium Cyanide	11.3 ounces
Silver Cyanide	6.7 ounces
Ammonium Thiosulfate	See step (b)
Water to make	1 gallon

a. Fill the tank to 2/3 its working capacity with water. Add the ingredients in the order listed, while stirring constantly. Dissolve each ingredient completely before adding the next. Raise the solution to the required operating level by adding water.

b. Add 0.8 ml of ammonium thiosulfate per gallon of working volume and stir the solution thoroughly. Filter the solution after make up, and continuously while in use.

c. Hang a few silver anodes on the work rail and electrolyze the tank for about two hours.

d. Perform daily analysis of ingredients, except carbonates (25 ounces/gallon max.) weekly.

e. Maintain the solution as follows:

Ingredients	Quantity
Silver Cyanide	6.2 - 7.2 ounces/gallon
Free Potassium Cyanide	7.0 - 8.0 ounces/gallon
Temperature	Room
Control	Laboratory

NOTE

The silver plate may become rough and nodular after the carbonate concentration reaches a maximum of 15 ounces per gallon. Additions of potassium hydroxide may be made to the bath to counteract this condition and thus extend the working life of the solution. A sufficient amount of potassium hydroxide should be added to maintain the pH of the silver plating solution between 11.5 - 12.0

f. Add 0.125 ml of ammonium thiosulfate per gallon of silver plating solution every four hours when parts are being plated.

g. After a prolonged shut-down, twenty-four hours, or more, add 0.25 ml of ammonium thiosulfate per gallon of plating solution at least two hours prior to plating.

6-946. SOLUTION NO. 27 (TIN PLATE).

Ingredients	Quantity
Tin Fluoborate Concentrate	0.265 gallon
Glue	0.8 ounce
Beta Naphthol	0.13 ounce
Water to make	1 gallon

a. Fill the rubber lined tank to about 2/3 its working capacity with water. Add the tin fluoborate and stir well.

b. Allow the glue to soak and fully expand in warm water in a separate container and add the beta naphthol, heat and stir to a creamy mix. Add this mix to the bath with constant stirring to give uniform dispersion.

c. Raise the solution to the required operating level by adding water. An occasional purification with activated carbon will improve the operation of the bath. No silicon bearing filter aids should be used.

d. After every fill analyze the solution and make the necessary additions to the purified bath.

e. Maintain the solution as follows.

pH	0.2
Density	21 - 23° Baume'
Ratio: Anode to Cathode	2:1
Temperature	21 - 37°C (70 - 100°F)
Control	Laboratory

6-947. SOLUTION NO. 28 (CHROMIC ACID DIP).

Ingredients	Quantity
Chromic Acid	0.35 pound
Water to make	1 gallon

a. Fill the tank to about 2/3 its working capacity with water. Add the required amount of chromic acid, stirring until it is completely dissolved. The necessary precautions involved in the handling of chromic acid should be observed. Add water to obtain operating level and stir thoroughly. The solution is now ready for use. Check the specific gravity with a hydrometer once a week. Maintain 2.5 - 4.0 degrees Baume'.

6-948. SOLUTION NO. 29 (FLUOBORIC ACID).

Ingredients	Quantity
Fluoboric Acid	16 fluid ounces
Water	112 fluid ounces

a. Fill the container with the required amount of water.

b. Add the fluoboric acid to the water and stir thoroughly while making the addition. Observe the necessary safety precautions in handling acids.

c. Make the solution in small quantities and discard weekly.

6-949. SOLUTION NO. 30 (MURIATIC ACID 17 PER CENT).

Ingredients	Quantity
Muriatic Acid	17 per cent by volume
Water to make	1 gallon

a. Fill the tank to about 2/3 its working capacity with water. Slowly add the muriatic acid, stirring while making the addition. Bring the bath to the proper operating level by adding water.

b. Maintain gravity at 3 - 6° Baume'. Discard solution weekly.

6-950. SOLUTION NO. 31 (NITRIC-HYDROFLUORIC ACID ETCH).

Ingredients	Quantity
Water	0.33 gallon
Nitric Acid 40° Baume'	0.67 gallon
Hydrofluoric Acid (48 per cent)	38.5 mls

a. Fill the container with the required amount of water and add the nitric acid. Stir the solution well.

b. Add the hydrofluoric acid and stir thoroughly. The solution is now ready for use.

NOTE

The nitric acid and water may be mixed at any time. The hydrofluoric acid should not be added until there are parts to be etched. The solution should not be used if it has been made up for more than eight hours. The etching mixture must be prepared, stored and used in plastic lined containers which are not attacked by nitric or hydrofluoric acids. Do not use glass.

6-951. SOLUTION NO. 32 (NITRIC-HYDROFLUORIC ACID ETCH).

NOTE

This etch is to be used only on pistons fabricated from WAD 6233 material.

Ingredients	Quantity
Water	0.33 gallon
Nitric Acid 40 degrees Baume'	0.67 gallon
Hydrofluoric Acid (48 per cent)	38.5 mls
Nickel Chloride	11.3 grams

a. Fill the container with the required amount of water and add the nitric acid. Stir the solution well. Add the hydrofluoric acid.

b. Add 11.3 grams of nickel chloride to a small amount of warm water, stir until thoroughly dissolved and add to the etching solution and stir well. The solution is now ready for use.

NOTE

The nitric acid and water may be mixed at any time. The hydrofluoric acid and nickel chloride should not be added until there are parts to be etched. The solution should not be used if it has been made up for more than eight hours. The etching mixture must be prepared, stored and used in plastic lined containers which are not attached by nitric or hydrofluoric acids. Do not use glass.

6-952. SOLUTION NO. 33 (PERSULFATE ETCH).

Ingredients	Quantity	
	For 1 Liter	For 1 Gallon
Ammonium Persulfate	100 grams	13.3 ounces
Ammonium Hydroxide	100 mls	12.75 fluid ounces
Water	800 mls	102.5 fluid ounces

a. Add the required amount of water to the container. Add the other ingredients, stirring thoroughly while making the additions. The solution is now ready for use.

b. Make up this bath in small quantities and discard when the etch time is excessive.

6-953. SOLUTION NO. 34 (SULFURIC ACID 50 PER CENT ANODIC ETCH).

Ingredients	Quantity
Sulfuric Acid	0.5 gallon
Water to make	1 gallon

a. Fill the tank to about 2/5 its working capacity with water. Slowly add the sulfuric acid with continual stirring.

WARNING

Exercise extreme caution as considerable heat will be generated during this operation. Cooling of the solution is accomplished during sizing and when the tank is in operation, by a constant spray of cold water on the outside of the tank.

b. After acid addition is complete, add water to bring the bath to operating level. Stir thoroughly and allow to cool to room temperature. Observe the necessary safety precautions in acid handling.

c. Maintain the solution as follows.

Temperature	Room 30°C (86°F) max.
Control	Laboratory

(maintain specific gravity at 1.355 - 1.408).

6-954. SOLUTION NO. 35 (PM 90 INHIBITED ACID).

a. The PM 90 is used in the "as received" condition without dilution. A crock of appropriate size will serve as a container.

b. The solution is operated at room temperature and spent solution is discarded monthly. Observe the necessary safety precautions in acid handling.

6-955. SOLUTION NO. 36 (ANODIC ALKALINE CLEANER).

Ingredients	Quantity
Anodic Cleaner	12 ounces
Water to make	1 gallon

a. Fill the tank to about 2/3 its working capacity with water and heat to approximately 65°C (150°F). Add the anodic cleaner.

b. Place clean steel cathodes on the side rails of the tank, add water to bring the bath to operating level and allow it to rise to proper operating temperature. The solution is now ready for use.

c. Maintain control of the solution in accordance with the vendor's instructions. Temperature and control can be maintained as follows. Discard solution weekly.

Temperature	93°C (200°F)
Control	Local

6-956. SOLUTION NO. 37 (CATHODIC CLEANER).

Ingredients	Quantity
Anodex Electric Cleaner	12 ounces
Water to make	1 gallon

a. Fill the container to about 2/3 its working capacity with water and heat to about 48°C (120°F). Add the cleaner, slowly, stirring until it is completely dissolved.

b. Place clean steel anodes on side rails of container. Add water to bring the solution up to its operating level and allow it to rise to operating temperature.

c. Maintain control of the solution in accordance with the vendor's instructions. Perform a weekly analysis of free alkali. The temperature and control should be maintained as follows.

Temperature	93°C (200°F)
Control	Laboratory

6-957. SOLUTION NO. 38 (SOAP CLEANER).

Ingredients	Quantity
Soap Cleaner	8 ounces
Water to make	1 gallon

a. Fill the container to about 2/3 its working capacity with water and heat to approximately 65°C (150°F). Add the soap cleaner, slowly, stirring while making the additions, until the cleaner is completely dissolved.

b. Increase the temperature of the solution until it boils gently and allow it to boil approximately 30 minutes. Add water to bring the solution up to operating level and allow it to rise to operating temperature. The solution is then ready for use.

c. Maintain control in accordance with vendor's instructions. Discard every other week. The temperature and control should be maintained as follows.

Temperature	93°C (200°F)
Control	Local

6-958. SOLUTION NO. 39 (SODIUM CYANIDE).

Ingredients	Quantity
Sodium Cyanids	2 ounces
Water to make	1 gallon

a. Fill the tank to about 2/3 its working capacity with water.

b. Add the required amount of sodium cyanide and stir until completely dissolved. Add water to bring bath to operating level.

c. Discard the solution weekly.

6-959. SOLUTION NO. 40 (COPPER STRIP, STEEL PARTS).

Ingredients	Quantity
Chromic Acid	4 pounds
Sulfuric Acid	4 fluid ounces
Water to make	1 gallon

a. Fill the tank to about 1/2 its working capacity with water. Add the ingredients in the order given, stirring and dissolving each completely before adding the next. Add water to bring the bath to operating level.

b. Make up all losses due to drag-out by adding the required amount of solution base composition.

c. Discard the bath when the stripping time becomes twice the initial time.

NOTE

Do not make any additions of water to bath.

6-960. SOLUTION NO. 41 (CHROMIUM STRIP, ALUMINUM PARTS).

Ingredients	Quantity
Enthone Enstrip CR-5	1 pound
Water	1 gallon

a. Fill the tank to about 2/3 its capacity with water.

b. Add stripper slowly, stirring constantly until it is completely dissolved. Add the balance of water to bring to operating level.

c. Use solution at a temperature of 77°C (170° F) and control locally.

d. When stripping time becomes excessive, discard the solution and make up a new bath.

6-961. SOLUTION NO. 42 (LUBRIZE).

Ingredients	Quantity
Parco Lubrite No. 2	0.1 gallon
Water to make	1.0 gallon
Steel Wool	1.3 ounces

a. Fill the tank to about 2/3 its working capacity with water, and heat to 96°C (205°F). Add lubrite solution to the hot water and thoroughly stir the mixture. Add water, as necessary, to raise the solution to operating level.

b. Age a new bath by dissolving the required amount of steel wool in the solution. The solution temperature should be 65°C (150°F), when aging.

c. Maintain the acid in the solution as follows: Total acid at 11.5 - 12.5 points; check daily.

$$\text{Ratio } \frac{\text{total acid}}{\text{free acid}} \text{ at } \frac{5.5}{1} \text{ to } \frac{6.0}{1}$$

d. The iron content is to be maintained at 20 - 30 per cent (0.268 - 0.402 oz/gal). Add 32.0 ml of lubrite per gallon of solution for each point below 12 of the total acid.

e. Add 0.4 ounce manganese carbonate per gallon of solution to reduce the free acid 1.0 point.

f. Filter the solution and clean the tank weekly. The recommended temperature is 96°C (205°F).

6-962. ADDITIONS.

a. Add the Parco lubrite chemical directly to the bath while stirring thoroughly.

NOTE

The acid ratio is very important. It is usually unbalanced by keeping the tank hot when there is no work in it.

b. Analyze the bath, lubrize the work and then turn off the heat.

6-963. SOLUBLE OIL.

a. The following list of ingredients and quantities are required.

Ingredients	Quantity
Safco 770	1 part
Water	25 parts

b. Mix the ingredients in a suitable container and the oil is ready for use.

6-964. SOLUTION ANALYSIS PROCEDURES. The following solution analysis procedures are to be used to determine the strength, content and control of the applicable plating solution. Refer to paragraph 6-1054 for chemical source.

6-965. ANALYSIS NO. 1 (COPPER STRIKE).

6-966. COPPER METAL.

a. Pipette a five ml sample into a 250 ml beaker. Add 15 mls concentrated nitric acid and 10 mls concentrated sulfuric acid (use hood). Boil on a hot plate to produce sulfur trioxide fumes.

b. Cool and dilute to 100 ml with distilled water. Cool again and add 0.5 gram potassium fluoride.

c. Add ammonium hydroxide to deep blue color. Add acetic acid from the pipette until the color changes to light blue and then one ml in excess. Cool and add four grams of potassium iodide crystals.

d. Titrate to a straw colored solution with standard sodium thiosulfate solution. Add three mls of starch indicator solution. Titrate to flesh colored end point.

e. Refer to table 6-14, reference 1 for calculation.

6-967. FREE SODIUM CYANIDE.

a. Pipette a 10 ml sample of plating solution into a 250 ml Erlenmeyer flask.

b. Add 45 mls of distilled water, 25 mls of 4.2 per cent potassium iodide solution and five drops of ammonium hydroxide.

c. Titrate to opalescense with a 0.1N silver nitrate solution.

d. Refer to table 6-14, reference 2 for calculation.

6-968. CAUSTIC SODA.

a. Pipette a 10 ml sample of plating solution into a 250 ml Erlenmeyer flask.

b. Add 30 mls of distilled water, 50 mls of 20 per cent barium chloride solution and three drops of thymolpthalein indicator.

c. Titrate to a white end point with 1N hydrochloric acid.

d. Refer to table 6-14, reference 3 for calculation.

6-969. SODIUM CARBONATE.

a. Pipette a 10 ml sample of the plating solution into a 250 ml beaker. Add 100 mls of distilled water and bring to a boil. Add 15 mls of 20 per cent barium chloride solution slowly, while stirring.

b. Remove from the hot plate and filter through No. 40 Whatman paper. Add a few drops of barium chloride to the first few portions of filtrate. If precipitate forms, pour it back into the 250 ml beaker, add five more mls of barium chloride. Filter and test again. Repeat this procedure until the filtrate shows no precipitate.

c. Wash beaker and precipitate with hot water. Transfer the precipitate and filter paper to the original beaker. Add 50 mls of distilled water and three drops of methyl orange indicator. Titrate to pink end point with 1.0N hydrochloric acid.

d. Refer to table 6-14, reference 4 for calculation.

TABLE 6-14. CALCULATION FORMULAS

1. Ounces/gallon Cu metal = 1.704 x N x ml $Na_2S_2O_3 \cdot 5H_2O$

2. Ounces/gallon free Na CN = 1.308 x N x ml $AgNO_3$

3. Ounces/gallon NaOH = 0.536 x N x ml HC1

4. Ounces/gallon Na_2CO_3 = 0.706 x N x ml HC1

5. Ounces/gallon Ni = $\frac{\text{Conc Std Ni Soln}}{\text{ml EDTA for Std Ni Soln}}$ x ml EDTA for sample

6. Ounces/gallon Ni Cl_2 = ml Std $AgNO_3$ x normality x 3.24

   Ounces/gallon $NiSO_4$ = $\frac{\text{Conc Std Ni Soln}}{\text{ml EDTA for Std Ni Soln}}$ x $\frac{\text{ml EDTA for sample - (ounces/gallon Ni } Cl_2\text{) x 1.10}}{0.220}$

7. Ounces/gallon H_3BO_3 = ml Std NaOH x normality x 4.13

8. Ounces/gallon Ni = $\frac{\text{Conc Std Ni Soln (ounces/gallon) x ml EDTA for sample - Ounces/gallon Ni } Cl_2}{\text{ml EDTA for Std Ni Soln}} = \frac{\text{Ounces/gallon Ni}}{0.242}$

9. Ounces/gallon HC1 = NaOH x N x 6.39

10. Ounces/gallon AgCn = $\frac{\text{ml KCNS sample}}{\text{ml KCNS Std}}$ x N of Ag NO_3 x 18

TABLE 6-14. CALCULATION FORMULAS (Cont'd)

11. Ounces/gallon KCN = 3.48 x N x ml $AgNO_3$

12. Ounces/gallon K_2CO_3 = 0.926 x N x ml HC1

13. Ounces/gallon Cadmium = $\frac{\text{Conc Std Cd Soln}}{\text{ml EDTA for Std Cd Soln}}$ x ml EDTA for sample

14. Ounces/gallon Sodium Cyanide = 6.54 x N x ml of Silver Nitrate

15. Ounces/gallon Sodium Carbonate = 0.706 x N x ml Hydrochloric Acid

16. Ounces/gallon Chromic Acid = 11.1 x N x ml Sodium Thiosulfate

17. Ounces/gallon Sulfates = 5.49 x weight of precipitate (grams)

18. Ounces/gallon KCN - ml $AgNO_3$ x N x 1.74

19. Ounces/gallon KOH = ml of standard HCl x N x 0.749

20. Percent Rocheltex by volume = $1 - \frac{\text{ml Fe } (NH_4)_2\ (SO_4)_2 \text{ of sample}}{\text{ml Fe } (NH_4)_2\ (SO_4)_2 \text{ of titre}}$ x 12.5 x N of Ce $(NH_4)_2\ (SO_4)_3$

21. Ounces/gallon NaCN = ml of standard $AgNO_3$ x N x 1.31

TABLE 6-14. CALCULATION FORMULAS (Cont'd)

22. Ounces/gallon Pb = 45.5 x weight Pb SO_4

23. Ounces/gallon HBF_4 = ml NaOH x N x 1.18

24. Ounces/gallon Lead = weight of lead sulfate (precipitate) x 18.3

25. Ounces/gallon total Tin = ml 0.1N iodine x 0.159

26. Ounces/gallon Stannuous Tin = ml 0.1 N iodine x 0.159

27. Ounces/gallon Free Fluoboric Acid = ml NaOH x 1.0N x 1.18

28. Percent Tin in plate = $\frac{\text{weight of precipitate x 0.7876 x 100}}{\text{weight of sample}}$

29. Ounces/gallon Nickel = $\frac{\text{Conc Std Ni Soln (ounces/gallon)}}{\text{ml EDTA for Std Ni Soln}}$ x ml EDTA for sample

30. Ounces/gallon H_3BO_3 = ml Std NaOH x H x 4.13

31. N = $\frac{3.146}{\text{ml } Na_2S_2O_3 \cdot 5H_2O \text{ required for 0.20 gm Cu}}$

32. ml 1N $Na_2S_2O_3 \cdot 5H_2O$ x 0.0415 = lbs per gal Na_2CR_2O7

33. ml 0.1N NaOH x 0.0505 = pts per gal HNO_3

6-970. ANALYSIS NO. 2 (NICKEL STRIKE).

6-971. NICKEL METAL.

a. Pipette a two ml sample into a 250 ml flask. Add 100 mls of distilled water and 10 mls of concentrated NH_4OH.

b. Add 0.5 grams of murexide indicator mixture. The blue solution turns yellow. Titrate with EDTA to a purple end point.

c. Pipette a two ml sample of standard nickel into a 250 ml flask and repeat the procedure as for plating solution sample.

d. Refer to table 6-14, reference 5 for calculation.

6-972. NICKEL CHLORIDE.

a. Pipette a five ml sample into a 250 ml flask.

b. Add 50 mls of distilled water and one ml of potassium chromate solution.

c. Titrate with standard 0.1N $AgNO_3$ to the appearance of a permanent red brown precipitate.

d. Refer to table 6-14, reference 6 for calculation.

6-973. BORIC ACID.

a. Using a pH meter, adjust the pH of the tank sample to 5.0 - 5.5, with standard sodium hydroxide. Pipette a two ml sample into a 250 ml beaker. Add two grams of mannitol, 50 mls of H_2O and four drops of bromocresol purple indicator. Swirl the solution and titrate with standard (0.1N) NaOH to a blue end point.

b. Add another two grams of mannitol, titrate if necessary to a blue end point. Maintain a slight slurry of mannitol at all times. Repeat this step if necessary.

c. Refer to table 6-14, reference 7 for calculation.

6-974. ANALYSIS NO. 3 (NICKEL STRIKE, WOOD'S).

6-975. NICKEL CHLORIDE.

a. Pipette a two ml sample into a 250 ml flask. Add 150 mls of distilled water and 10 mls of NH_4OH. Add 0.5 grams murexide indicator. The blue solution turns yellow. Titrate with EDTA to a purple end point.

b. Pipette two ml of standard nickel into a 250 ml flask and continue as in step a.

c. Refer to table 6-14, reference 8 for calculation.

6-976. MURIATIC ACID.

a. Pipette a two ml sample into a 250 ml flask. Add 100 mls of distilled water.

b. Add four drops of bromocresol purple indicator. Titrate with 0.1N sodium hydroxide (NaOH) to a blue end point.

c. Refer to table 6-14, reference 9 for calculation.

6-977. ANALYSIS NO. 4 (SILVER STRIKE AND SILVER PLATE).

6-978. SILVER CYANIDE.

a. Pipette a five ml sample into a 200 ml Erlenmeyer flask. Pipette five ml 0.1N silver nitrate into a 200 ml flask for standard and process bath as indicated in steps b through d.

b. Add 20 mls of concentrated sulfuric acid and five mls of nitric acid to each (use hood). Boil until the precipitate dissolves and sulfur trioxide fumes are given off.

c. Cool and add 80 mls of distilled water. Cool and add three mls of two per cent ferric ammonium sulfate solution.

d. Titrate to a faint pink with 0.1N potassium thiocyanate solution. Compare the color with the sample which is not titrated to an end point. The color change is from white to peach proceded by flocculation of the precipitate.

e. Refer to table 6-14, reference 10 for calculation.

6-979. POTASSIUM CYANIDE (FREE).

a. Pipette a five ml sample into a 250 ml Erlenmeyer flask. Add 80 mls of distilled water, one ml of 4.2 per cent potassium iodide solution and five drops of ammonium hydroxide.

b. Titrate to opalescense with 0.1N silver nitrate solution.

c. Refer to table 6-14, reference 11 for calculation.

6-980. POTASSIUM CARBONATE.

a. Pipette a 10 ml sample into a 250 ml beaker. Add 100 mls of distilled water and bring to a boil. Add 15 mls of 20 per cent barium chloride solution slowly, while stirring.

b. Remove from the hot plate and filter through No. 40 Whatman paper. Add a few drops of barium chloride to the first few mls of filtrate. If the precipitate forms, pour it back into the 250 ml beaker, add five mls more of barium chloride, filter and test again. Repeat this until the filtrate shows no precipitate.

c. Wash the beaker and precipitate with hot water. Transfer the precipitate and filter paper to the original beaker. Add 50 mls of distilled water and three drops of methyl orange indicator. Titrate to a pink end point with 1.0N hydrochloric acid.

d. Refer to table 6-14, reference 12 for calculation.

NOTE

This analysis is to determine whether the carbonate is below the permissible maximum. No carbonate is added to the plating solution.

6-981. ANALYSIS NO. 5 (CADMIUM PLATE).

6-982. CADMIUM METAL.

a. Pipette a two ml sample of the plating solution into a 250 ml Erlenmeyer flask. Add 0.5 ml buffer solution, 10 ml NaCN solution and one gram of eriochrome indicator mixture. Add formaldehyde solution slowly until the blue solution turns red-violet.

b. Titrate with EDTA to a blue end point. Add two mls of formaldehyde solution. If the red-violet color appears continue the titration with EDTA to a blue end point. The titration is continued until the blue end point is unchanged by the addition of formaldehyde.

c. Pipette two mls of standard cadmium solution into a 250 ml. flask. Follow procedure steps a and b.

d. Refer to table 6-14, reference 13 for calculation.

6-983. CYANIDE.

a. Pipette a two ml sample into a 250 ml flask, add 85 mls of distilled water, 12 mls of K1 solution (4.8 per cent) and 15 mls of ammonium hydroxide.

b. Titrate with 0.1N standard $AgNO_3$ to the first appearance of a pale yellow opalescence.

c. Refer to table 6-14, reference 14 for calculation.

6-984. SODIUM CARBONATE.

a. Pipette a 10 ml sample into a 250 ml beaker. Add 100 mls of distilled water and boil on a hot plate. Add 15 mls of 20 per cent barium chloride solution while stirring.

b. Remove the beaker from the hot plate and filter the contents through No. 40 Whatman paper. Wash the beaker and precipitate with hot water.

c. Place the precipitate and filter paper in the original beaker. Add 50 mls of distilled water and three drops of methyl orange indicator.

d. Titrate to a pink end point with 1.0N hydrochloric acid.

e. Refer to table 6-14, reference 15 for calculation.

6-985. ANALYSIS NO. 6 (CHROMIUM PLATE).

6-986. CHROMIC ACID.

a. Pipette a 10 ml sample of the chromium plating solution into a 250 ml volumetric flask. Dilute to volume with distilled water and mix thoroughly.

b. Pipette 10 mls of the diluted solution into a 400 ml beaker. Add 200 mls of distilled water, three grams potassium iodide crystals and 10 mls of concentrated sulfuric acid. Allow to cool.

c. Titrate with standard sodium thiosulfate solution to a straw color. Add two mls of starch indicator.

d. Continue titration to clear solution.

e. Refer to table 6-14, reference 16 for calculation.

6-987. SULFATES.

a. Pipette a 10 ml sample of the chromium plating solution into a 400 ml beaker. Add 125 mls of distilled water, 10 mls of concentrated hydrochloric acid and 20 mls of isopropyl alcohol.

b. Cover with watchglass and boil for thirty minutes. Add 10 mls of 20 per cent barium chloride solution slowly, while stirring rapidly. Boil gently for five minutes and remove from the hot plate.

c. Allow the precipitate to settle for approximately 12 hours. Collect precipitate on Whatman No. 42 filter paper. Wash the precipitate and beaker with hot distilled water, until washings are no longer acid.

d. Place precipitate in tared porcelain crucible. Ignite the precipitate until all carbon is burned off. Cool in desiccator and weigh as barium sulfate.

e. Refer to table 6-14, reference 17 for calculation.

f. Maintain sulfate concentration at 0.33 ounce/gallon.

NOTE

One ml of concentrate sulfuric acid (Sp. Gr. 1.84), added to one gallon of chromium plating solution, will raise the sulfate concentration 0.062 ounce per gallon.

6-988. ANALYSIS NO. 7 (COPPER PLATE, ACID).

6-989. COPPER SULFATE. Place a Baume' hydrometer in the acid copper plating solution. Record the reading.

Calculation: Convert the reading to ounces/gallon. This will give the ounces/gallon of the copper sulfate plus sulfuric acid. Subtract the ounces/gallon of acid to obtain ounces/gallon of copper sulfate. Employ seven ounces/gallon of sulfuric acid for computation.

NOTE

The following list indicates the Baume' reading versus copper sulfate and sulfuric acid in ounces per gallon.

Baume' Reading (Degrees)	Copper Sulfate and Sulfuric Acid ounces/gallon
16.0	27.8
16.5	28.8
17.0	29.8
17.5	30.8
18.0	31.8
18.5	32.8
19.0	33.8
19.5	34.9
20.0	35.9
20.5	37.0
21.0	38.1
21.5	39.2
22.0	40.4
22.5	41.6
23.0	42.8
23.5	43.9
24.0	45.0
24.5	46.1
25.0	47.3
25.5	48.5
26.0	49.7
26.5	51.0
27.0	52.3

6-990. ANALYSIS NO. 8 (COPPER PLATE, ROCHELTEX).

6-991. COPPER METAL.

a. The analysis for copper metal is the same as the analysis for copper strike (analysis No. 1).

b. Refer to paragraph 6-965 for determination of Cu metal.

6-992. FREE POTASSIUM CYANIDE. Pipette a 10 ml sample of plating solution into a 250 ml flask. Add 45 mls of distilled water, 25 mls of 4.2 per cent potassium iodide solution and five drops of ammonium hydroxide. Titrate to opalescence with 0.1N silver nitrate solution. Refer to table 6-14, reference 18 for calculation.

6-993. POTASSIUM CARBONATE.

a. The analysis for potassium carbonate is the same as the analysis for silver strike and silver plate (analysis No. 4).

b. Refer to paragraph 6-977 for determination of K_2CO_3.

6-994. POTASSIUM HYDROXIDE. Pipette sample solution into a 250 ml flask. Add 10 drops of LaMotte sulfo-orange. Titrate with standard HCL to a yellow end point. Refer to table 6-14, reference 19 for calculation.

6-995. ROCHELTEX.

a. Pipette a two ml sample into a 500 ml flask. Transfer sample to hood. Add 100 mls of 25 per cent by volume H_2SO_4 and boil gently until the precipitate begins to dissolve (about five minutes). Add two mls of 10 per cent by volume HNO_3 and rinse the walls of the flask with distilled water. Continue boiling until the precipitate dissolves completely (within 10 minutes).

b. While the solution is hot, pipette exactly 50 mls of 0.1N standard ceric ammonium sulfate into the flask. Boil gently for 30 minutes. Cool to room temperature.

c. Add two drops of ferroin indicator and titrate excess ceric ammonium sulfate with ferrous ammonium sulfate to an orange-red end point.

d. Determine the titre of ferrous ammonium sulfate solution. Pipette 50 mls of 0.1N standard ceric ammonium sulfate into a 250 ml beaker. Add 100 mls of 25 per cent by volume H_2SO_4. Titrate with ferrous ammonium sulfate solution as in step c.

e. Refer to table 6-14, reference 20 for calculation.

6-996. ANALYSIS NO. 9 (COPPER PLATE, HIGH SPEED).

6-997. COPPER METAL.

a. The analysis for copper metal is the same as the analysis for copper strike (analysis No. 1).

b. Refer to paragraph 6-965 for determination of Cu metal.

6-998. FREE SODIUM CYANIDE. Pipette sample solution into a 250 ml flask. Add 25 mls of potassium iodide solution and five drops of ammonium hydroxide. Chill solution to 3 - 5°C (37 - 41°F). Titrate with standard $AgNO_3$ to the first appearance of a pale yellow opalescence which is permanent for at least 30 seconds at 3 - 5°C (37 - 41°F). Refer to table 6-14, reference 21 for calculation.

6-999. SODIUM CARBONATE.

a. The analysis for sodium carbonate is the same as the analysis for copper strike (analysis No. 1).

b. Refer to paragraph 6-965 for determination of Na_2CO_3.

6-1000. POTASSIUM HYDROXIDE.

a. The analysis for potassium hydroxide is the same as the analysis for copper plate Rocheltex (analysis No. 8).

b. Refer to paragraph 6-990 for determination of KOH.

6-1001. ANALYSIS NO. 10 (LEAD PLATE).

6-1002. LEAD FLUOBORATE CONCENTRATE. Place Baume' hydrometer in the lead plate solution. Record the reading.

Calculation: Convert the reading to ounces/gallon from the following tabulation. This will give the ounces/gallon of lead fluoborate concentrate. The operating range should be 22 - 26 degrees Baume'.

Baume' Reading (Degrees)	Lead Fluoborate Concentrate Ounces/gallon
18	26.9
19	28.6
20	30.4
21	32.0
22	33.8
23	35.5
24	37.2
25	39.0
26	40.7
27	42.4
28	44.1
29	45.8
30	47.5

6-1003. LEAD. Pipette a two ml sample of lead plating solution into a 250 ml beaker. Add 100 mls of distilled water and heat almost to boiling. Add 10 mls of 20 per cent sulfuric acid solution while stirring. Filter when cool, using a dry, weighed fretted glass crucible. Wash with six portions of water. Dry at 110°C (230°F) and weigh. Refer to table 6-14, reference 22 for calculation.

6-1004. FREE FLUOBORIC ACID. Pipette a 10 ml sample of lead plating solution into a 250 ml Erlenmeyer flask. Add 110 mls of distilled water. Titrate with 1.0N sodium hydroxide (NaOH) to the first turbidity. Refer to table 6-14, reference 23 for calculation.

6-1005. DETERMINING PLATING RATE.

a. Clean and prepare a suitable test panel, 2 x 3 inches, for plating as instructed in the lead plating procedure. Dry the panel with an air blast. Weigh the panel on a sensitive analytical balance.

b. Lead plate the panel as instructed in the lead plating procedure, omitting the nickel strike procedure. Rinse the panel in cold water and dry with an air blast. Weigh the lead plated panel.

c. Subtract the original weight of the panel, obtained in step a, from the weight of the plated panel, obtained in step b, to obtain the weight of the lead deposited on the panel.

Example:

Weight of panel after plating	36.4865 grams
Weight of panel before plating	34.2536 grams
Weight of lead deposited	2.2329 grams

d. Multiply the amperes used by the length of time in minutes consumed in plating the panel to obtain the ampere-minutes.

Example:

1.25 amperes x 28 minutes = 35 ampere-minutes

e. The plating rate of the lead plating solution, in grams per ampere-minute, is determined by dividing the weight of the lead deposited, obtained in step c by the number of ampere-minutes used, obtained in step d.

Example:

$$\frac{2.2320 \text{ grams}}{35 \text{ ampere-minutes}} = 0.064 \text{ grams/ampere-minute}$$

f. Maintain the plating rate at 0.060 - 0.067 grams per ampere-minute.

6-1006. DETERMINING WEIGHT OF LEAD TO BE PLATED. Determine the desired weight of lead to be plated by multiplying the thickness required (inches) times the area of the surface to be plated (square inches) times the gram weight per cubic inch of lead.

Example:

0.001 x 12 x 186 = 2.2320 grams

6-1007. DETERMINING LEAD PLATING TIME. Determine the lead plating time by dividing the desired weight of lead by the product of the plating rate times the current density.

Example:

$$\frac{2.230}{0.064 \times 1.25} = 28 \text{ minutes}$$

6-1008. ANALYSIS NO. 11 (LEAD-TIN).

6-1009. LEAD.

a. Pipette five ml sample of lead-tin plating solution into a 400 ml beaker containing 200 mls of 10 per cent sulfuric acid solution. Boil gently for 10 minutes.

b. Cool and allow the precipitate to settle. Filter in tared Gooch crucible, wash with one per cent sulfuric acid.

c. Dry, place Gooch crucible in porcelain crucible, heat over an open flame for 10 minutes. Cool and weigh.

d. Refer to table 6-14, reference 24 for calculation.

6-1010. TIN.

a. Pipette a five ml sample of lead-tin plating solution into a 400 ml Erlenmeyer flask containing 100 mls of distilled water and 50 mls of concentrated hydrochloric acid. Add 10 grams of iron strip and one gram of sodium bicarbonate.

b. Boil gently for 10 minutes (equip flask with exit tube running into a one per cent sodium bicarbonate solution). Cool fast (with exit tube immersed in saturated sodium bicarbonate solution to prevent air being sucked into the flask).

c. After cooling, remove the exit tube, add one gram of sodium bicarbonate and five mls of 0.1 per cent starch solution. Titrate rapidly with 0.1N iodine solution to the first 10 second end point.

d. Refer to table 6-14, reference 25 for calculation.

6-1011. STANNOUS TIN. Pipette a five ml sample of lead-tin plating solution into a 400 ml Erlenmeyer flask containing 100 mls of distilled water, 50 mls of concentrated hydrochloric acid, five mls of 0.1 per cent starch solution and one gram of sodium bicarbonate. Titrate rapidly with 0.1N iodine solution to the first 10 second end point. Refer to table 6-14, reference 26 for calculation.

6-1012. FREE FLUOBORIC ACID. Pipette a 10 ml sample of lead-tin plating solution into a 125 ml Erlenmeyer flask. Titrate with 1.0N sodium hydroxide (NaOH) to white turbidity. Refer to table 6-14, reference 27 for calculation.

6-1013. DETERMINING PLATING RATE.

a. Clean and prepare a suitable test panel, 2 x 3 inches, for plating as instructed in the lead-tin plating procedure. Dry the panel with an air blast. Weigh the panel on a sensitive analytical balance.

b. Lead-tin plate the panel as instructed in the lead-tin plating procedure. Rinse the panel in cold water and dry with an air blast. Weigh the lead-tin plated panel.

c. Subtract the original weight of the panel, obtained in step a, from the weight of the plated panel, obtained in step b, to obtain the weight of the lead deposited on the panel.

Example:

Weight of panel after plating	35.4528 grams
Weight of panel before plating	33.2904 grams
Weight of lead-tin deposited	2.1624 grams

d. Multiply the amperes used by the length of time in minutes consumed in plating the part to obtain the ampere-minutes.

Example:

2.5 amperes x 14 minutes = 35 ampere-minutes

e. The plating rate of the lead-tin plating solution, in grams per ampere-minute, is determined by dividing the weight of the lead deposited, obtained in step c by the number of ampere-minutes, used, obtained in step d.

Example:

$$\frac{2.1624 \text{ grams}}{35 \text{ ampere-minutes}} = 0.062 \text{ grams/ampere-minutes}$$

f. Maintain the plating rate at 0.060 - 0.067 grams per ampere-minute.

6-1014. DETERMINING WEIGHT OF LEAD-TIN TO BE PLATED. Determine the desired weight of lead-tin to be plated by multiplying the thickness required (inches) times the area of the surface to be plated (square inches) times the gram weight per cubic inch of lead.

Example:

$$0.001 \times 12 \times 180.2 = 2.1624 \text{ grams}$$

6-1015. DETERMINING LEAD-TIN PLATING TIME. Determine the lead-tin plating time by dividing the desired weight of the lead-tin to be plated by product of the plating rate times the current density.

Example:

$$\frac{2.1624}{0.062 \times 2.5} = 14 \text{ minutes}$$

6-1016. DETERMINING TIN IN LEAD-TIN PLATE.

a. Scrape about one gram of plate from the test part of the test panel. Weigh 0.5 grams of scraping into a 300 ml beaker. Dissolve in 20 mls of 1:1 nitric acid. Evaporate the solution almost to dryness or pasty mass (five ml) and cool.

b. Add 100 mls of five per cent nitric acid and then bring to a boil. Remove from the hot plate, add filter paper pulp, stir and then allow to settle. Keep warm by placing the beaker on the hot plate for about 30 minutes.

c. Filter while warm through Whatman No. 40 filter paper and wash the precipitate with warm five per cent nitric acid. If the filtrate is not clear, filter again. If the precipitate is very fine, use double filter paper.

d. Place the filter paper and precipitate in a weighed porcelain crucible and burn off the paper with a small flame. Then heat to a dull red heat for 15 minutes.

e. Cool the crucible and weigh the precipitate.

f. Refer to table 6-14, reference 28 for calculation.

g. Calculation for lead in lead-tin plate: 100 minus the per cent of tin in plate = per cent of lead in plate.

6-1017. ANALYSIS NO. 12 (NICKEL SULFAMATE PLATE).

6-1018. NICKEL.

a. Pipette a two ml sample of the plating solution into a 250 ml flask. Add 150 ml of distilled water and 10 ml of NH_4OH. Add 0.5 grams of Murexide indicator. The blue solution turns yellow. Titrate with EDTA to a purple end point.

b. Pipette a two ml sample of standard nickel into a 250 ml flask and continue as in step a.

c. Refer to table 6-14, reference 29 for calculation.

6-1019. BORIC ACID. Using pH paper, adjust the pH of the tank sample to 5.0 - 5.5 with NaOH. Pipette two mls of aliquot into a 150 ml flask. Add 25 ml of boric acid mixture. Swirl the solution and titrate with standard NaOH to a faint violet end point. Refer to table 6-14, reference 30 for calculation.

6-1020. ANALYSIS NO. 13 (SULFURIC ACID, 50 PER CENT). Place a Baume' hydrometer in the sulfuric acid solution. A reading of 38 -42 degrees Baume' should be recorded to maintain the specific gravity at 1.335 - 1.408.

6-1021. ANALYSIS NO. 14 (HYDROCHLORIC ACID, MURIATIC ACID). Place a Baume' hydrometer (0.30 degrees Baume' Heavy Liquids) in the hydrochloric acid solution and record the reading. See figure 6-278 to determine the hydrochloric acid concentration (per cent by volume) from the specific gravity of the solution.

6-1022. STANDARD SOLUTIONS AND INDICATORS.

6-1023. SODIUM THIOSULFATE (0.1N).

a. Dissolve 26 grams of sodium thiosulfate in hot distilled water. Add one gram of sodium carbonate and dilute to one liter. Weigh out 0.20 grams C. P. copper foil into a 250 ml beaker. Dissolve in 50 mls of 1:1 nitric acid.

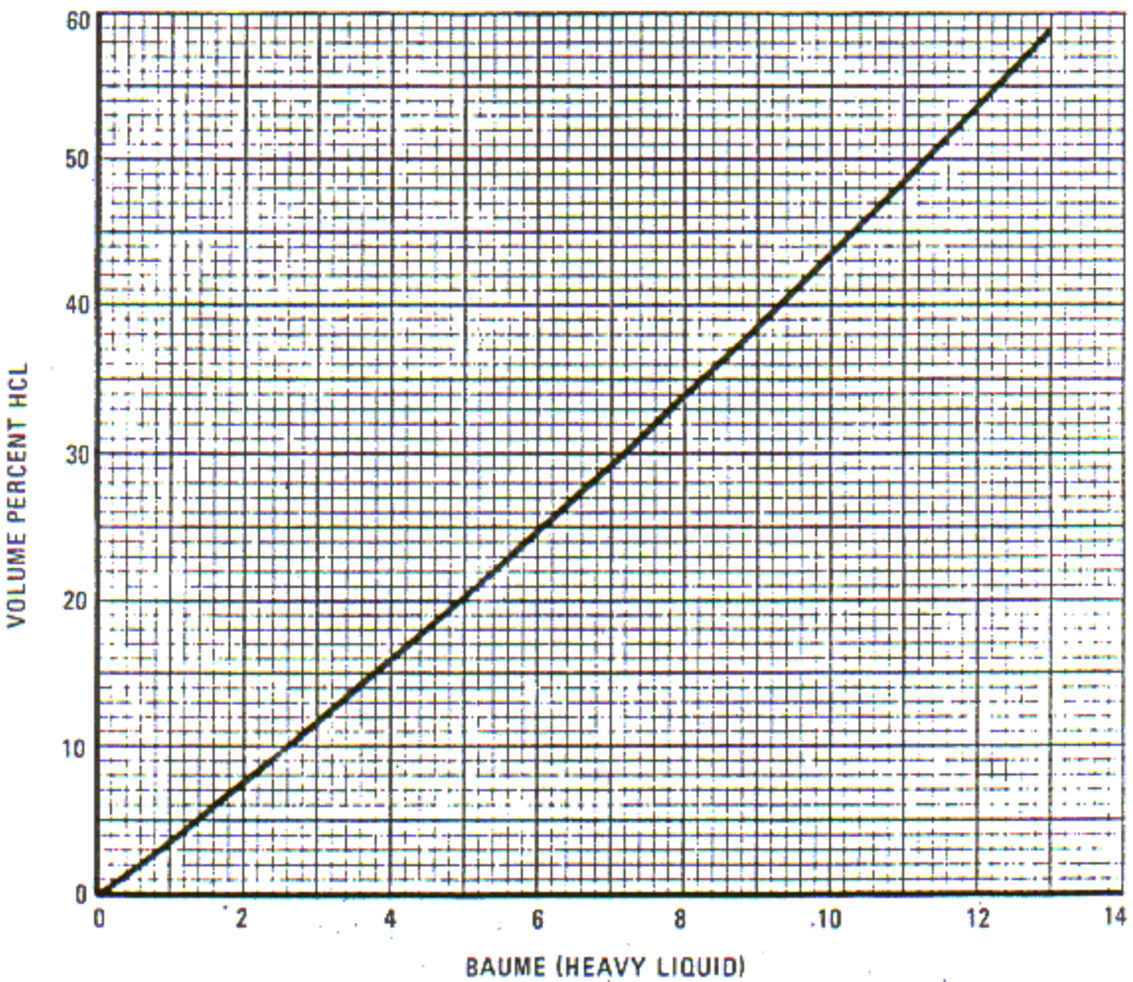

Figure 6-278. Volume Percent Baume' Chart

b. When cool, add 10 mls of concentrated sulfuric acid. Heat on a hot plate to dense white sulfur trioxide fumes. Cool and wash down the sides of the beaker with distilled water and dilute to 100 mls.

c. Add 0.5 grams potassium fluoride crystals. Add concentrated ammonium hydroxide until the solution is deep blue. Add concentrated acetic acid until the color changes to a light blue or bluish-green.

d. Allow the solution to cool to room temperature, then add three grams of potassium iodine crystals.

e. After the solution stands a few minutes, titrate with the sodium thiosulfate solution to a light yellow. Add two mls of starch indicator.

f. Titrate with sodium thiosulfate to a flesh colored end point.

g. Refer to table 6-14, reference 31 for calculation.

6-1024. SILVER NITRATE (0.1N). The standard silver nitrate solution is prepared by weighing out exactly 17.00 grams of the C. P. salt, dissolved in distilled water, after which it is diluted to one liter in a volumetric flask.

6-1025. HYDROCHLORIC ACID (1N). Dilute 90 mls of C. P. hydrochloric acid (Sp. Gr. 1.18) to one liter with distilled water and standardize against a suitable base.

6-1026. SODIUM CYANIDE (0.5N).

a. The 0.5 sodium cyanide is prepared by dissolving 25 grams C. P. sodium cyanide in about 200 mls of distilled water in a one liter volumetric flask. Dissolve 1.7 grams C. P. silver nitrate in about 100 mls of distilled water. Add the silver nitrate solution to the sodium cyanide solution and dilute the mixture to one liter.

b. Weigh out 0.2 grams nickel foil and dissolve in a mixture of five mls of concentrated nitric acid, five mls of concentrated sulfuric acid, and five mls of distilled water in a 250 ml flask.

c. Evaporate to sulfur trioxide fumes. Cool and add an excess of ammonium hydroxide.

d. Cool and add 75 mls of the pyrophosphate solution and titrate with the sodium cyanide solution to a clear end point (or until the precipitate formed redissolves).

6-1027. SODIUM HYDROXIDE (0.1N). Dissolve four grams of C. P. sodium hydroxide in 100 mls of distilled water and then dilute to one liter in a volumetric flask. Standardize against a suitable acid.

6-1028. POTASSIUM THIOCYANATE (0.1N). Dissolve 10 grams of C. P. potassium thiocyanate in hot distilled water and then dilute to one liter in a volumetric flask.

6-1029. SODIUM PYROPHOSPHATE SOLUTION. Dissolve 50 grams of sodium pyrophosphate crystals, 50 grams of ammonium chloride crystals and two grams of potassium iodide crystals in distilled water and dilute to one liter in a volumetric flask.

6-1030. SODIUM CHROMATE SOLUTION (2 PER CENT). Dissolve two grams of the salt in 100 mls of distilled water.

6-1031. BARIUM CHLORIDE SOLUTION (20 PER CENT). Dissolve 20 grams of the salt in 100 mls of distilled water.

6-1032. FERRIC AMMONIUM SULFATE SOLUTION (2 PER CENT). Dissolve two grams in 100 mls of distilled water.

6-1033. POTASSIUM IODIDE SOLUTION (4.2 PER CENT). Dissolve 42 grams of the salt in 1000 mls of distilled water.

6-1034. STANDARD NICKEL SOLUTION. Dissolve eight grams of pure nickel in about 100 mls of equal parts of concentrated sulfuric acid, nitric acid and water. Evaporate to fumes, cool and dilute to one liter in a volumetric flask. One ml = 0.008 grams nickel.

6-1035. METHYL ORANGE INDICATOR. Dissolve one gram of methyl orange in 1000 mls of distilled water.

6-1036. THYMOPHTHALEIN INDICATOR. Dissolve one gram of thymolphthalein in 100 grams of ethyl alcohol.

6-1037. BROMOCRESOL PURPLE INDICATOR. Dissolve 0.1 gram of the dry indicator in 18.5 mls of 0.01N sodium hydroxide. Add water to make 250 mls of the solution, pH range 5.2 - 6.8.

6-1038. STARCH SOLUTION. Make a paste of six grams of soluble starch and 100 mls of water. Pour this mixture into a flask containing about 600 mls of boiling distilled water. Add one gram of sodium hydroxide in 10 mls of water, three grams of potassium iodide crystals and a few crystals of phenol. Boil for five minutes and dilute to 1000 mls.

6-1039. STANDARD POTASSIUM IODATE (0.1N). Dissolve the following ingredients in the order listed in 200 mls of distilled water, then dilute to one liter in a volumetric flask.

Sodium Hydroxide (NaOH)	1 gram
Potassium Iodine (KI)	100 grams
Potassium Iodate (KIO_3)	3.5670 grams

6-1040. SODIUM SULFIDE (15 PER CENT). Dissolve 15 grams of sodium sulfide crystals in distilled water and dilute to 100 mls.

6-1041. AMMONIUM CHLORIDE (1.0 PER CENT). Dissolve one gram of ammonium chloride crystals in 100 mls of distilled water.

6-1042. HYDROCHLORIC ACID (1:1). Mix one part of concentrated hydrochloric acid with one part of distilled water.

6-1043. IODINE - POTASSIUM IODINE. Dissolve 30 grams of potassium iodide in water and add 19.1 grams of iodine crystals. Dilute to one liter.

6-1044. MUREXIDE INDICATOR. Grind together 0.2 grams murexide (ammonium purpureate) and 100 grams C. P. sodium chloride until the organic compound is mixed intimately throughout the mass.

6-1045. EDTA (ETHYLENEDIAMINETETRA-ACETIC ACID, DISODIUM SALT) - FOR NICKEL ANALYSIS. Dissolve 23.25 grams EDTA in distilled water and dilute to one liter. Standardize against a solution containing an exactly weighed amount of C. P. nickel sulfate ($NiSO_4$).

6-1046. EDTA (ETHYLENEDIAMINETETRA-ACETIC ACID, DISODIUM SALT) - FOR CADMIUM ANALYSIS. Dissolve 19.4 grams EDTA in distilled water and dilute in two liters. Standardize against a standard cadmium oxide solution.

6-1047. STANDARD NICKEL (4.0 OUNCES/GALLON). Dissolve 77.5 grams of reagent grade nickel sulfate in distilled water. Dilute to one liter. Determine the exact concentration by electrolysis.

6-1048. LA MOTTE SULFO-ORANGE (pH 11.0 - 12.6). Use a purchased from supplier.

6-1049. BORIC ACID. Dissolve 60 grams of sodium citrate in distilled water. Add 600 mls of glycerine to the solution. Dissolve two grams of phenopthalein in a minimum quantity of methyl alcohol and add to the above solution. Add distilled water to make one liter.

6-1050. FORMALDEHYDE (36 PER CENT). Use as purchased from supplier.

6-1051. BUFFER SOLUTION FOR CADMIUM. Dissolve 110 grams of ammonium hydroxide in 500 mls of distilled water. Add 700 mls of ammonium chloride. Add distilled water to make two liters.

6-1052. STANDARD CADMIUM. Dissolve 100 grams of sodium cyanide in 400 mls of distilled water. Weigh out exactly 25.8 grams cadmium oxide and add to the mixture of sodium cyanide. Add distilled water to make one liter.

6-1053. ERIOCHROME BLACK T MIXTURE. Thoroughly mix one gram of Eriochrome T with 400 grams of sodium chloride (C. P.). Store in a dry brown bottle.

NOTE

This mixture is stable whereas an aqueous solution is unstable.

6-1054. SOURCES OF SUPPLY FOR PLATING CHEMICALS.

6-1055. GENERAL. Group a, lists plating chemicals. Group b, lists plating materials and proprietary items. Group c lists reagents and laboratory equipment for plating solution analysis. Group d identifies the various manufacturers and their addresses by the corresponding numbers appearing in the right hand column in groups a, b and c.

a. Plating Chemicals	Vendor Code
Acid Adjustor No. 400	49
Activator	35
Addition Agent No. 1	17
Addition Agent No. 10	49
Addition Agent No. 23	49
Alodine 1200	10
Ammonium Chloride	44
Ammonium Chloride (CP Granular) (Note: Grade ACS Code 1286 for Vendor 23 only)	23, 31
Ammonium Hydroxide	17
Ammonium Hydroxide (USP-CP)	1
Ammonium Nitrate (Technical Grade)	17
Ammonium Persulfate	41
Ammonium Thiosulfate	23
Barium Chlorate	17
Beta Naphthol	23
Boric Acid	4
Cadmium Oxide	17
Caustic Potash	17
Caustic Soda	4, 17, 23
Chromic Acid Crystals	17
Clepo 1805	22
Copper Cyanide	4, 17
Copper Sulfate	17
Cyanide	17
Ferric Ammonium Sulfate	31
Ferric Oxide Crystals	23
Fluoboric Acid	23
Glacial Acetic Acid	17, 23
Glue Powdered	6
Glycerine	31
Hydrochloric Acid	17, 23
Hydrofluoric Acid (48 per cent)	23
Hydrogen Peroxide (100 Volume - 30 per cent)	17, 23
Lead Fluoborate Concentrate	23
Magnesium Fluoride	23

a. Plating Chemicals (Cont)	Vendor Code
Manganese Carbonate	23
Muriatic Acid	23
Muriatic Acid (20 Degree Baume')	17, 23
Nickel Chloride	17
Nickel Chloride (USP or CP)	25
Nickel Sulfate	17
Nickel Sulfamate Solution	7
Nitric Acid (42 Degree Baume')	17, 23
Nitric Hydrofluoric Acid	17
Peptone	11
Potassium Carbonate	17
Potassium Cyanide	17
Potassium Iodate	31
Potassium Iodide	31
Potassium Thiocyanate	31
Silver Cyanide	5, 17
Sodium Bisulphate	23, 25
Sodium Carbonate	17, 44
Sodium Citrate (USP Granular)	31, 13
Sodium Cyanide (Note: Cyanegg 96/78 per cent for Vendor 17 only)	17
Sodium Dichromate	23
Sodium Hypophosphite (NF Fine Crystals)	39
Sodium Hyrophate	39
Sulfuric Acid (66 Degree Baume')	23
Tin Fluoborate Concentrate	23
Zinc Oxide	23

b. Plating Materials and Proprietary Items	Vendor Code
Anodex Electric Cleaner	32
Anodic Alkaline Cleaner	
Clepo 166	22
Clepo 425	22
Durodex XX	32
Anti-Pit Agent	17
Brightener (Cadmium Plating Cadux)	47
Cadmium Anodes	17
Cadmium Metal	47
Cathodic Cleaner	17
Chromium Strip Enthone Enstrip CR-5	19
Containers Lucoflex	14
Copper Anodes	24, 47
Copper Plating Salts (High Speed)	17
Ethylenediaminetetraacetic Acid	12

b. Plating Materials and Proprietary Items (Cont)	Vendor Code
Epoxide Phenolic Resin V-665 Catalyst 11x180	32A
Fidelity EX37 Solvent	20
Filter Paper Whatman No. 40	27
Formaldehyde	17
Heat Bath 85	26
Insulating Wax	28
Lead Anodes	36
Lead-Tin Anodes (7 per cent tin 93 percent lead)	36
Lead-Tin or Chromium Plate or Lead Antimony Anodes	24, 47
Lead-Tin Strip	
Enthone Tin-Lead Stripper	19
Liquid Heat 810	16
Lubrite No. 2	40
Mannitol	8
Masking Tape	
Michigan Microtape and Cement	33
Aluminum Foil Tape 430 (3-4 in. width)	34
Masking tape 215 (1 in. width)	34
Scotch Electrical Tape 33 (3/4 in. width)	34
Nickel Anodes	17
Nickel Metal	7
Nickel Strip	
Enthone Metal Stripper A	19
PM90	41
Pumice (Grade FFF)	41
Rochelle Salt	23
Rocheletex Salt	31
Safco 770	45
Silver Anodes	5
Soap Cleaner	
Clepo 65	22
Clepo 64	22
Metalex	32
Stainless Steel Anode	17
Stop-Off Lacquer	
Microstop Stop-Off Lacquer	33
Fidelity EX37	20
Stop-Off Lacquer Stripper	
Acetone	4
Fidelity 605	20
Titanine 160	46
Oakite No. 27	38
Stop-Off Lacquer Thinner, Fidelity EX37	
Unichrome Stop-Off Lacquer 323	48
Stripper Fidelity EX37	20
Stripper, Magnus 1100	32A
Thinner, MIBK (Methyl Isobutyl Keytone)	26A

c. Reagents and Laboratory Equipment for Plating Solution Analysis	Vendor Code
Almen A2 Gage	3
Bromocresol	17
Eriochrome T	15
Etching Equipment	29
Ferrion Indicator	31
Goggle or Protector Shield	37
Hull Cell Test	42
Laboratory Equipment	18, 50
La Motte Sulfo Orange	42, 21
Magnegage	2
Methyl Orange Indicator	31
Murexide Indicator	43
Neoprene Rubber Industrial Elbow Length Gloves and Apron (or equivalent)	37
Reagents	31, 28, 25

d. Identification of Manufacturers	Vendor Code
Aetna Color and Chemical Co. East Paterson, New Jersey	1
American Instrument Co. Silver Springs, Maryland	2
American Foundry Equipment Co. Mishawaka 2, Indiana	3
American Oil and Supply Co. Newark, New Jersey	4
American Platinum Works Newark, New Jersey	5
Armour Co. Chicago, Illinois	6
Atlantic Chemical and Metal Co. Chicago, Illinois	7
Atlas Powder Co. 904 Market Street Wilmington, Delaware	8
Barret Chemical Specialties Shelton, Connecticut	9
Becker and Andes 290 Atlantic Avenue Brooklyn, New York	10

d. Identification of Manufacturers (Cont)	Vendor Code
Cudahy Packing Co. Chicago, Illinois	11
Carbide and Carbon Chemical Co. Division of Union Carbide and Carbon Corp. 30 East 42nd Street New York, New York	12
Charles Pfizer and Co. Brooklyn, New York	13
Cournard Co. New York City, New York	14
Eastman Kodak Rochester 3, New York	15
E. F. Houghton Co. 55 West 42nd Street New York 36, New York	16
E. I. DuPont de Nemours and Co. Wilmington, Delaware	17
Eimer and Amend New York City, New York	18
Enthone Inc. New Haven, Connecticut	19
Fidelity Chemical Products Corp. Newark, New Jersey	20
Fisher Scientific Co. 633 Greenwich Street New York, New York	21
Frederick Gumm Chemical Co. Kearney, New Jersey	22
General Chemical Co. New York City, New York	23
Hansen-Van Winkle-Munning Co. Matawan, New Jersey	24
Harshaw Chemical Co. New York City, New York	25
Heat Bath Corp. Box 78 Springfield, Massachusetts	26
Hess Oil and Chemical Corp. State Street Perth Amboy, New Jersey	26A
H. Reeve Angel and Co., Inc. 54 Duane Street New York 7, New York	27
Industrial Emulsion Co. Nutley, New Jersey	28
James H. Matthews and Co., Inc. Clifton, New Jersey	29
J. J. Rhodes and Co. Long Island City, New York	30
J. T. Baker Chemical Co. Phillipsburg, New Jersey	31
MacDermid Inc. Waterbury, Connecticut	32
Magnus Chemical Co., Inc. 3 Kreie Street Garwood, New Jersey	32A
Michigan Chrome and Chemical Co. Detroit, Michigan	33
Midland Industrial Finishes Co. 55 E. Water Street Waukegan, Illinois	33A
Minnesota Mining and Manufacturing Co. Detroit, Michigan	34
Naugatuck Chemical Division of United Rubber Co. 132 Elm Street Naugatuck, Connecticut	35
National Lead Co. New York City, New York	36
New Jersey Engineering and Supply Co. Passaic, New Jersey	37
Oakite Corp. New York City, New York	38
Oilburg Electro-Chemical Co. New York City, New York	39
Parker Rust Proof Co. Detroit, Michigan	40
Pennsylvania Salt Mfg. Co. Philadelphia, Pennsylvania	41
R. O. Hull and Co., Inc. Rocky River, Ohio	42
Schuylkill Chemical Co. 2354 Sedgley Avenue Philadelphia, Pennsylvania	43
Seidler Chemical Co. Newark, New Jersey	44
Swan Finch Oil Co. Newark, New Jersey	45
Titanine Inc. Union, New Jersey	46
Udylite Corp. Detroit, Michigan	47
United Chromium Inc. New York City, New York	48
Vea Chemical Co. Cleveland, Ohio	49
Will Corp. New York City, New York	50

SECTION VII

ASSEMBLY OF SUBASSEMBLIES

7-1. GENERAL.

7-2. Observe the instructions in the following paragraphs in order to avoid unnecessary repetition. These instructions play an important part and must not be slighted through neglect. The life and performance of the engine may be affected.

a. Prior to assembly, remove all preservative compound by washing the parts in petroleum solvent, Federal Specification P-S-661. Check all parts for residual magnetism using a suitable magnetic field indicator, maintained in accordance with the manufacturers instructions. Refer to paragraph 6-26.

NOTE

Maximum acceptable readings shall not exceed 25 per cent of the indicator scale, shown as shaded areas in figure 7-1.

b. Extreme care must be taken to prevent foreign material such as dirt, dust, cotter pins, lock wire, nuts, washers, etc., from entering the engine. Stop the engine assembly until the dropped article is located even if it is necessary to do extensive disassembly.

c. Use suitable coverings to fit all openings during assembly. Exercise care to ensure that all dust caps, plugs and covers used to protect open lines are removed before associated parts are used.

d. Ensure that all parts are thoroughly clean before assembling. Carefully inspect the condition of all parts to be installed and ensure that all oil passages are clear.

e. Never use force in the assembly of any parts. If difficulty is encountered, disassemble and inspect for burrs, chips or any other interference.

f. Ensure that the threads of all studs, bolts and screws are free from nicks and burrs.

g. Do not use a tap in the fiber portion of lock nuts. Avoid subjecting fiber lock nuts to temperatures in excess of 121°C (250°F). These nuts may be reused until such time as the fiber portion has taken sufficient thread set to permit their being screwed down over a bolt or stud by hand. Fiber lock nuts should show at least 1-1/2 threads at the end of the stud or bolt beyond the fiber material when the nut has been tightened to its final torque value.

h. Always use new cotter pins, packing and sealing rings, gaskets, hose connections, lock washers and lock wire.

i. Always apply rubber cement, Specification MIL-A-5092, Type III to the male threads of threaded joints and when desired, apply sparingly to the female thread. Apply compound only to the metal fitting for hose connections.

j. Lubricate all external accessory drive splines prior to installation. Apply a heavy coating of lubricant to the ID and OD of the splines. Use lubricant in the following order of preference:

Plastilube No. 3	Warren Refining and Chemical Co. 5151 Dennison St. Cleveland 2, Ohio
Plastilube Moly No. 3	Warren Refining and Chemical Co. 5151 Dennison St. Cleveland 2, Ohio
Grease, Aircraft General Purpose MIL-G-7711	Texaco Petroleum Inc. 135 East 42nd St. New York, N.Y.
Dasco LM-2	D.A. Stuart Oil Co., P.O. Box 30 Summerville, N.J.

CAUTION

Do not inter-mix or contaminate any one grease with another.

7-3. GASKETS. Observe the following instructions when installing gaskets.

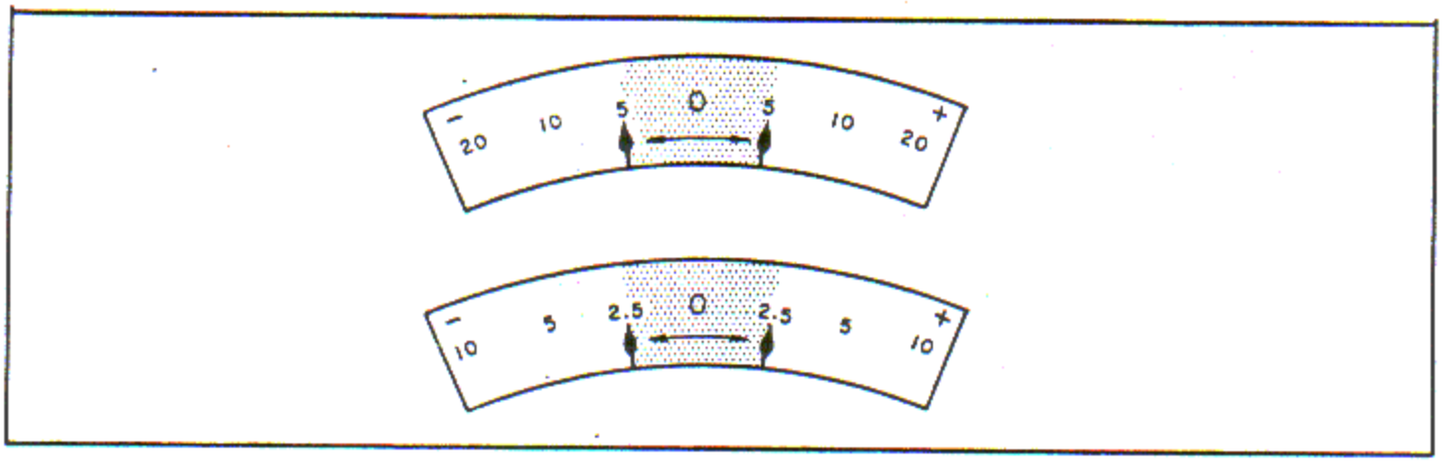

Figure 7-1. Magnetic Field Indicator Scales, Acceptance Limits

a. Prior to installation, all flat type asbestos gaskets shall be dipped in Dow-Corning 200 gasket release agent (Dow-Corning Corporation, New York, N.Y.) 100 centistokes or equivalent.

b. Ensure the gasket release agent covers both sides of the gasket mating surfaces. Remove gaskets from the release agent and allow excess fluid to drip from mating surfaces.

NOTE

Do not wipe excess fluid from mating surfaces.

c. Gaskets coated with release agent must be used within 48 hours after coating is applied. Gaskets that have been out of the release agent more than 48 hours shall be recoated prior to use.

NOTE

DC200 gasket release agent is not to be used at locations where electrical accessories are involved. DC200 does not apply to thin paper gaskets under the front oil pump, and under the accessory drive seals.

7-4. TABLES OF LIMITS. Tables of Limits and Tables of Tightening Torque Values are included in Section IX. Consult these tables during every operation in which standard torque values are involved. Parts requiring special torque values are listed in Tables 9-1 through 9-14. When special torque values apply to specific torque procedures, the torque values are indicated in the text by reference to the Table of Limits 9-15, Section IX. General instructions on torque wrenches are also included in Section IX. Refer to the Limits and Lubrication charts in Section IX for drawing of the engine basic assembly.

7-5. LOCKWIRING. Use the general principles of lockwiring as shown in figure 7-2, as applicable. Observe the following general rules, as a guide, to the practical application of lockwiring used in the assembly and overhaul of engines or parts.

NOTE

Always ensure that the lockwiring is applied in a manner that any tendency towards a part loosening will automatically stop by the wire tightening.

a. Properly torque parts to be wired, and ensure that the holes to be used for lockwiring are located in proper relationship to each other. When torque limits are such that the wire holes are not properly aligned, replace the part or parts until proper alignment is obtained.

CAUTION

Under no circumstances should units be loosened or overtorqued to gain proper alignment of holes.

b. New lock wire must always be used in each installation. Plier marks, nicks, cuts or digs on the wire are not acceptable.

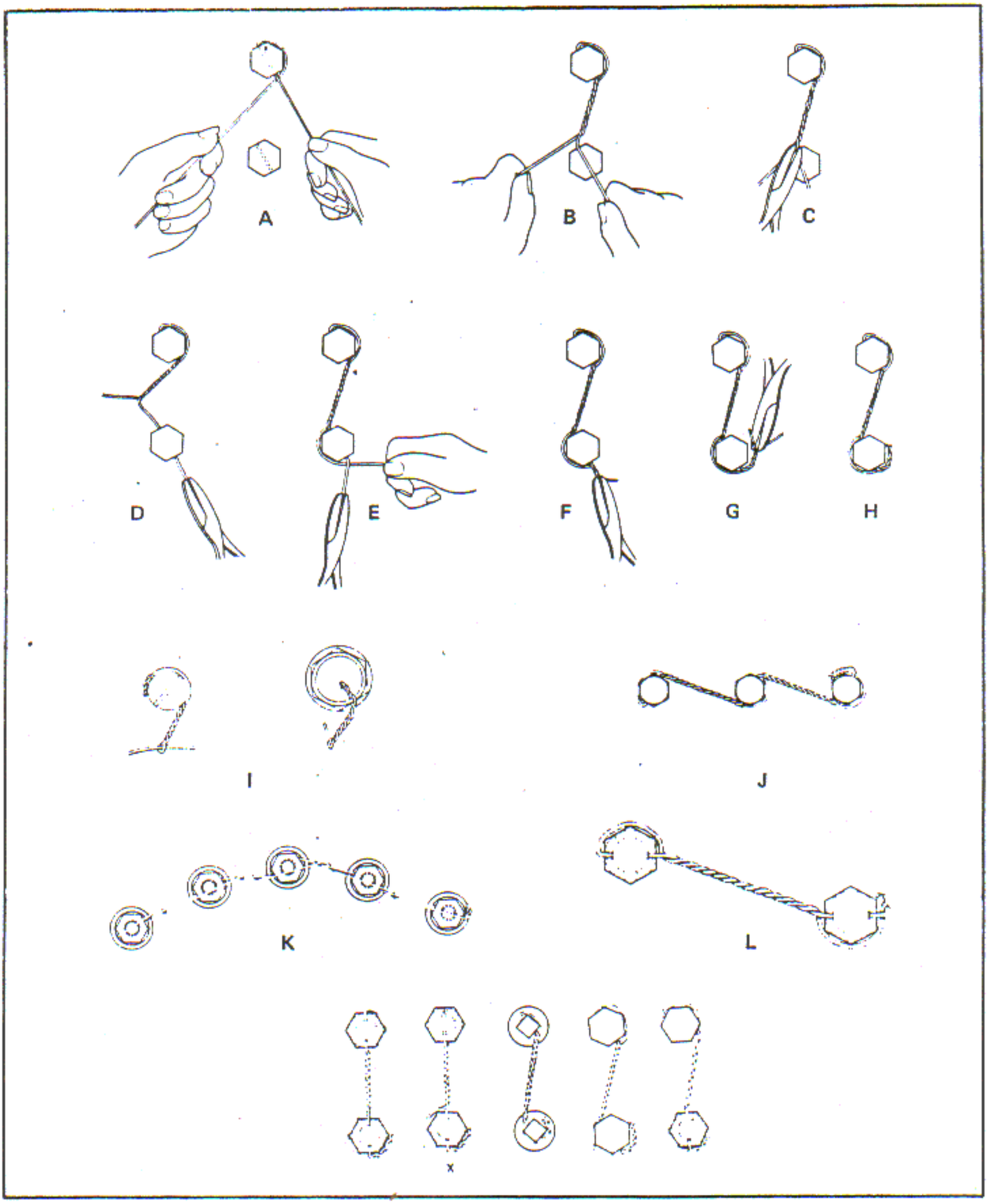

Figure 7-2. Various Lockwiring Procedures

NOTE

Use lock wire, Federal Specification QQ-W-423, 0.031 - 0.033 inch diameter for standard wiring operations.

c. Proceed to wire as follows: The wire held in the right hand must be over that which is held in the left hand and then twisted 180 degrees in a clockwise direction until the twisted wire is of appropriate length. See figure 7-2, views A and B.

d. Tighten the twisted length between six and eight twists per inch with smooth face pliers. See figure 7-2, view C.

e. Pull one strand of wire through the second of the parts to be wired together. Keep the wire straight, as it is drawn through the hole. See figure 7-2, view D.

f. Keep the strand taut through the hole with the left hand, grasp the free strand with the right hand and turn it around the hex and underneath as shown in figure 7-2, view E. Twist the strands counterclockwise and tighten as described in step b. See figure 7-2, views F and G.

g. Cut the twisted wire between three and five twists from the nut, and bend the twists toward the part as shown in figure 7-2, view H.

7-6. SPECIAL APPLICATIONS. These are special wiring applications other than those mentioned in paragraph 7-5 to be used where general wiring practices are impractical.

a. When a screw or nut must be wired to a part other than another screw or nut, lockwire as illustrated in figure 7-2, View I.

b. When three units are to be lockwired together, lockwire the three units with the twists between the second and third part in a counterclockwise direction. See figure 7-2, View J.

c. Various applications of parts to be fastened together are shown in figure 7-2, Views K and L.

d. The view in figure 7-2 identified with an X, shows the alternate locking procedure used only when the favored procedure is impractical.

e. When double strand lock wire is specified, two wires are twisted together and applied as instructed in this paragraph and paragraph 7-5.

7-7. TAB WASHERS. Follow these principles and steps for using tab washers.

a. New tab washers must be used on each new installation. When using single hole tab washers, the tab which is bent down against the stationary part, tab A, should be positioned at an angle of 90 degrees or less on the side. See figure 7-3.

b. Bend the remaining tab B, up across the bottom of only one face of the hex until it is against the face. The last two views of figure 7-3, show acceptable and unacceptable bends.

c. Bend the tap up against the hex face with which its junction line is 75 per cent or more of the tab width.

d. The number of tabs for bending up will vary according to design. In cases of two or more, the tab which is most favorably aligned is to be bent as described in steps b and c.

e. Do not leave a gap at the end of the tab greater than 0.030 inch. The gap between the tab and the face of the hex must not be greater than 0.010 inch at the bottom of the hex face.

f. In the application of multiple hole tab washers, the installation shall be as noted above, except that the tab A provision of step a is not required.

g. The installation of 180 degree elliptical tab washers are to be accomplished by bending up across one whole face of the hex head. See figure 7-3.

7-8. COTTER PINS.

a. Use new cotter pins at all times. Insert cotter pins with the plane of the eye parallel to the axis of the bolt or stud. See figure 7-3.

b. Bend the short prong of the pin down over and along side of the flat of the nut. Bend the long prong of the pin up over the end of the bolt unless otherwise specified.

c. When a tolerance condition causes slight interference between the eye of the cotter pin and

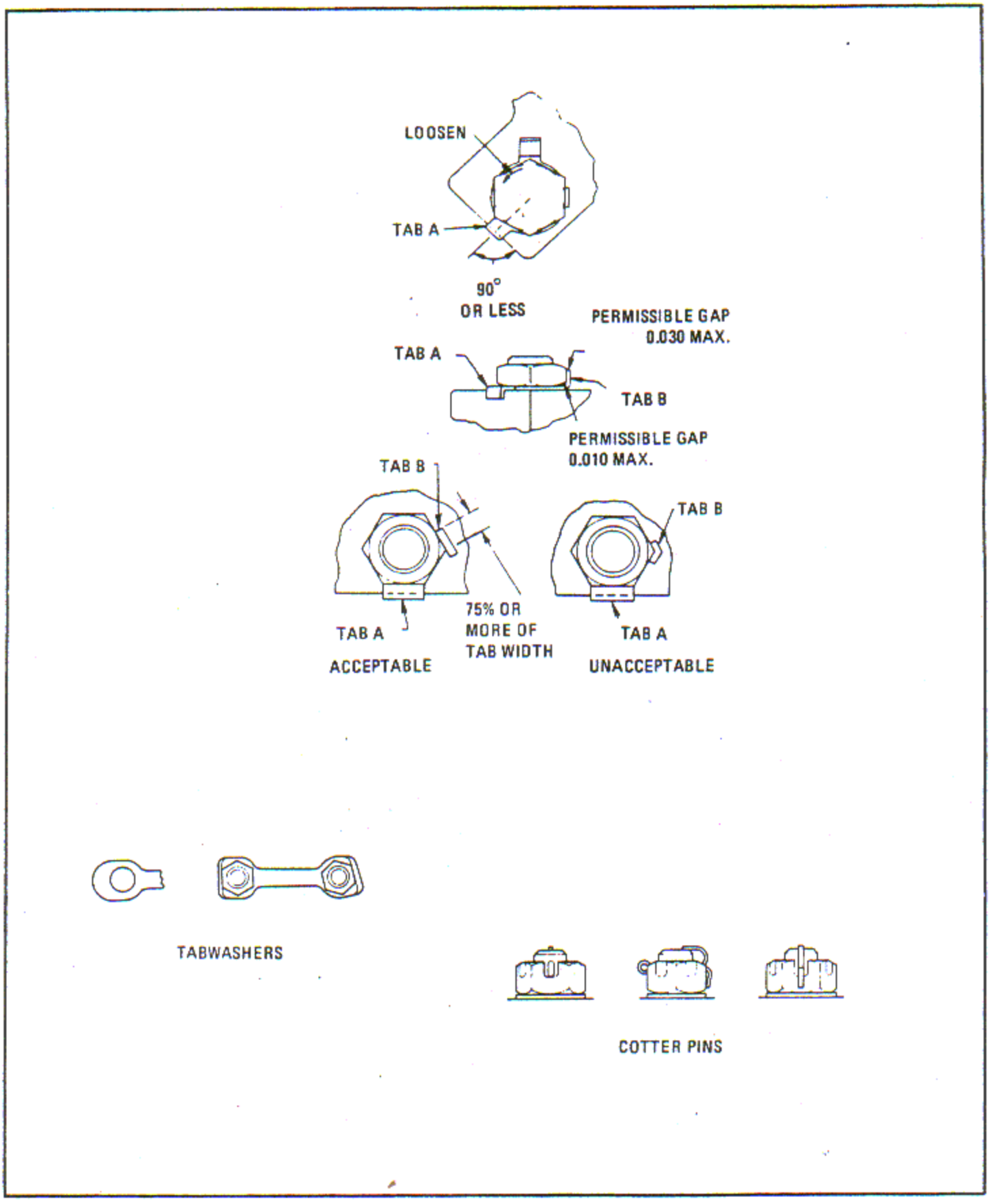

Figure 7-3. Tabwasher and Cotter Pin Applications

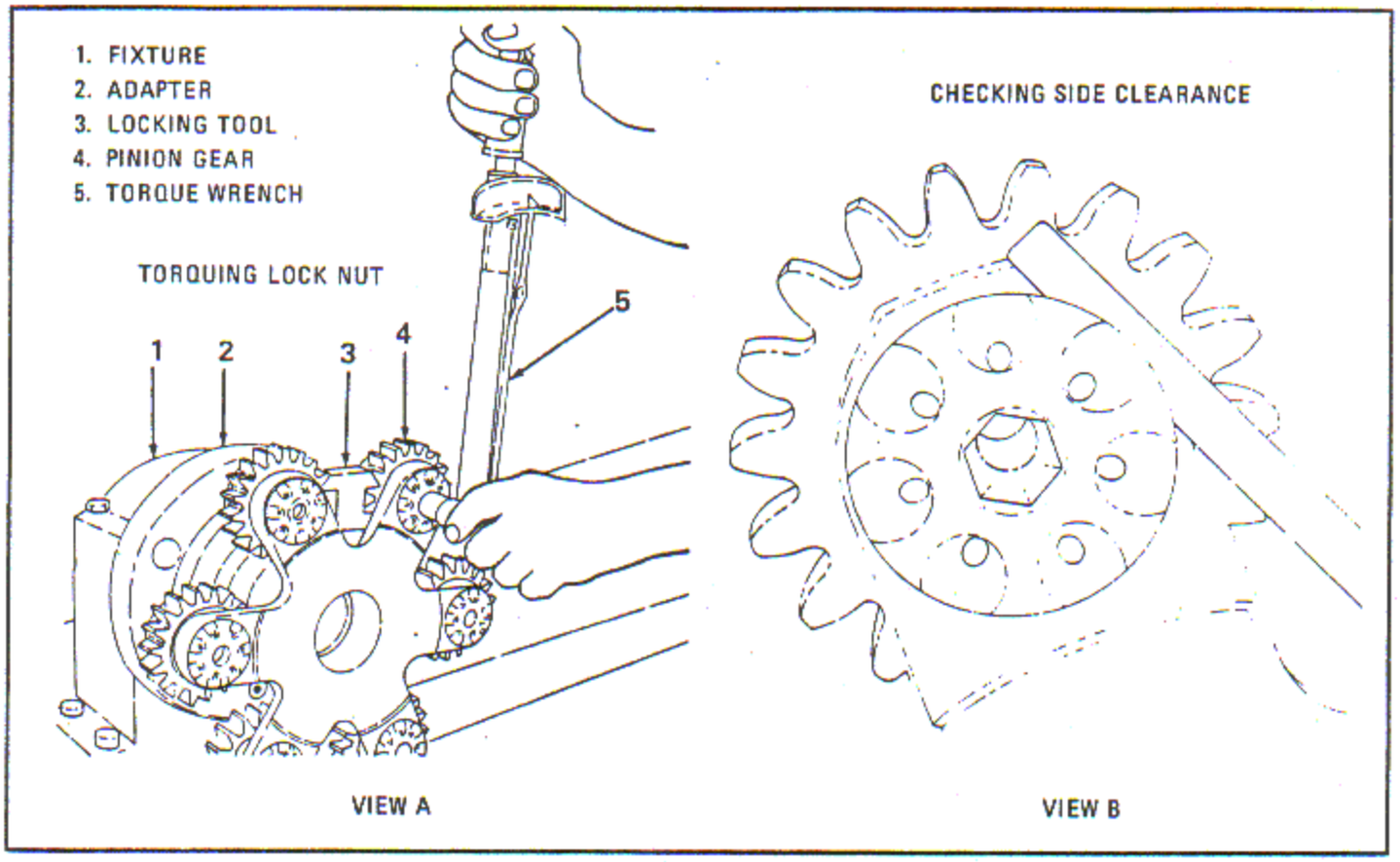

Figure 7-4. Torquing Reduction Driving Gear Pinion Lock Nut and Checking Side Clearance (R1820-76 Series, -86A, -86B)

the bottom of the nut castellation the cotter pin may be deformed slightly by forcing it into the nut castellation.

d. When parts are so close that the cotter pin prong over the end of the bolt can cause interference, cut it off flush with the end of the bolt and bend it toward the bolt.

CAUTION

Do not tighten cotter pins by turning the nut on the stud or bolt.

7-9. PROPELLER SHAFT ASSEMBLY (R1820-76 SERIES, -86A AND -86B). (See tool groups 99 and 114.)

a. Install the propeller shaft in fixture (1, figure 7-4) and adapter (2). Install the reduction driving gear pinions.

b. Install the pinion lock nuts which have left hand threads. Install pinion locking tool (3) between two pinions (4). Torque the lock nuts to the value specified in reference 903, Table of Limits, Section IX, using wrench (5).

c. Check pinion side clearance by pressing the pinion to the rear and measuring clearance between the pinion lock nut and rear face of propeller shaft arm. Reference 31, Table of Limits, Section IX, gives the proper clearance. See view B for method of checking side clearance.

d. Install the pinion lock nut cotter pins through the holes and spread the ends as shown in figure 7-5.

7-10. PROPELLER SHAFT ASSEMBLY (R1820-80 SERIES). (See tool group 99.)

a. Heat the propeller shaft reduction gear pinion carrier in an oil bath maintained at 177° to 205°C (350° to 400°F) for five minutes.

b. Dip the threads of two carrier to propeller shaft attaching bolts in engine oil. Insert them in

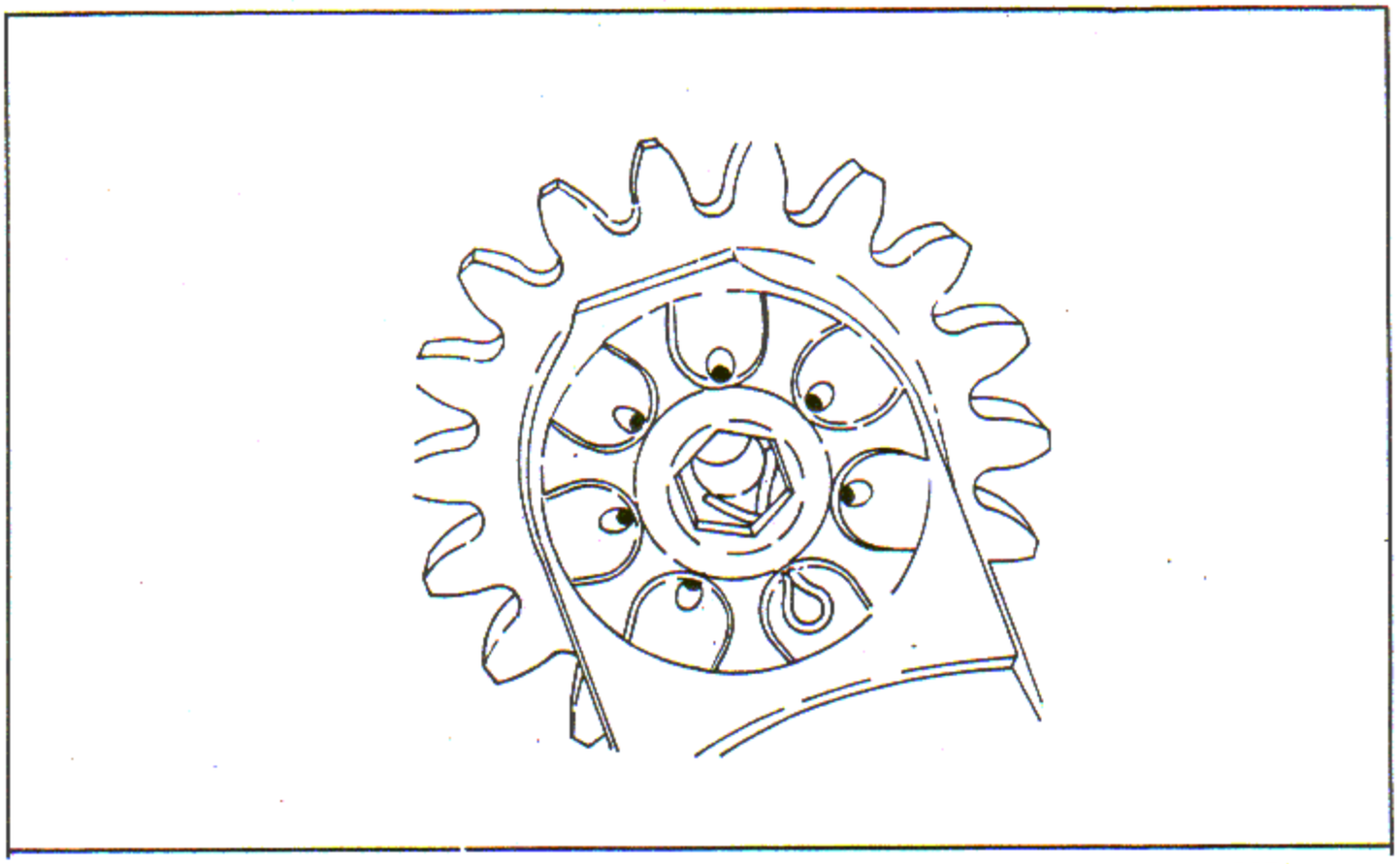

Figure 7-5. Reduction Drive Gear Pinion Nut Cotter Pin Installed (R1820-76 Series, -86A, -86B)

the heated carrier from the rear in holes 180 degrees apart. Place the carrier, front side up, on a clean bench.

c. Locate the propeller shaft in the carrier, guiding it by the bolts, until the rear flange of the propeller shaft seats against the shoulder of the carrier. Run down the retaining nuts on the guide bolts.

d. Place the assembly in fixture using adapter. Dip the threads of the retaining bolts in engine oil and install them. Run all the nuts down finger tight. Torque them to the value given in reference 902, Table of Limits, Section IX. Lockwire the nuts in pairs. See figure 7-6.

NOTE

Install new reduction driving gear pinion bushings at each overhaul.

e. Lubricate the trunnions, pinions and bushings with engine oil. Install the pinions and bushings on trunnions with the flange end of the bushings towards the propeller end.

f. Insert the pinion retaining bolts from the front. Install the retaining nuts and tighten them. Torque to 120 - 165 inch-pounds. Lockwire in pairs. Remove the assembly from the fixture.

7-11. GOVERNOR DRIVE GEAR ASSEMBLY (R1820-76 SERIES). (See tool group 56.)

a. Install the governor drive gear shaft plug in the shaft using drift, in an arbor press. Install the plug retaining circlet in the groove of the shaft.

b. Locate the drive gear on the shaft and install the attaching screws. Place the gear and shaft assembly in fixture and torque the attaching screws to 80 - 85 inch pounds. See figure 7-7. Lockwire the screws.

7-12. CRANKCASE FRONT SECTION COMPLETE ASSEMBLY (R1820-76 SERIES, -86A AND -86B). (See tool group 17.)

a. Place crankcase front section front end down on a work bench. Install protectors on rear parting surface.

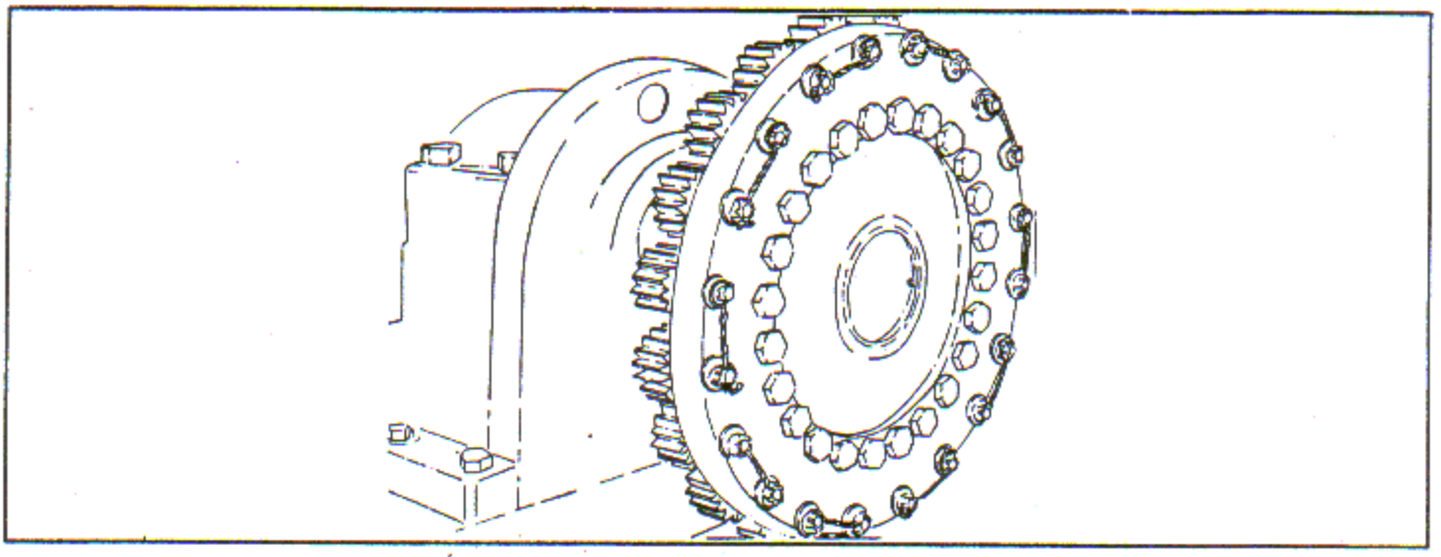

Figure 7-6. Propeller Shaft Assembly in Fixture (R1820-80 Series)

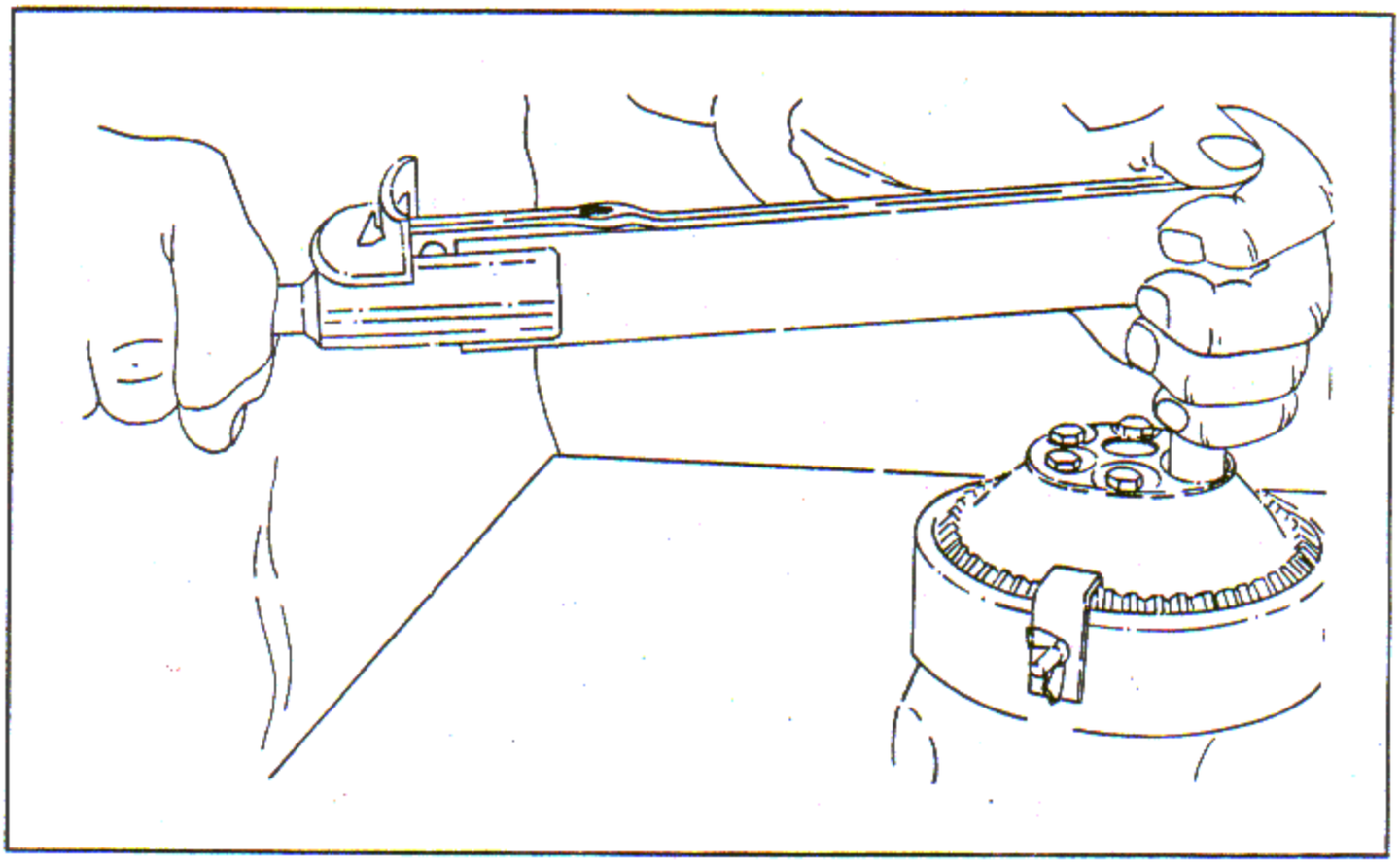

Figure 7-7. Torquing Governor Drive Gear to Shaft Screws

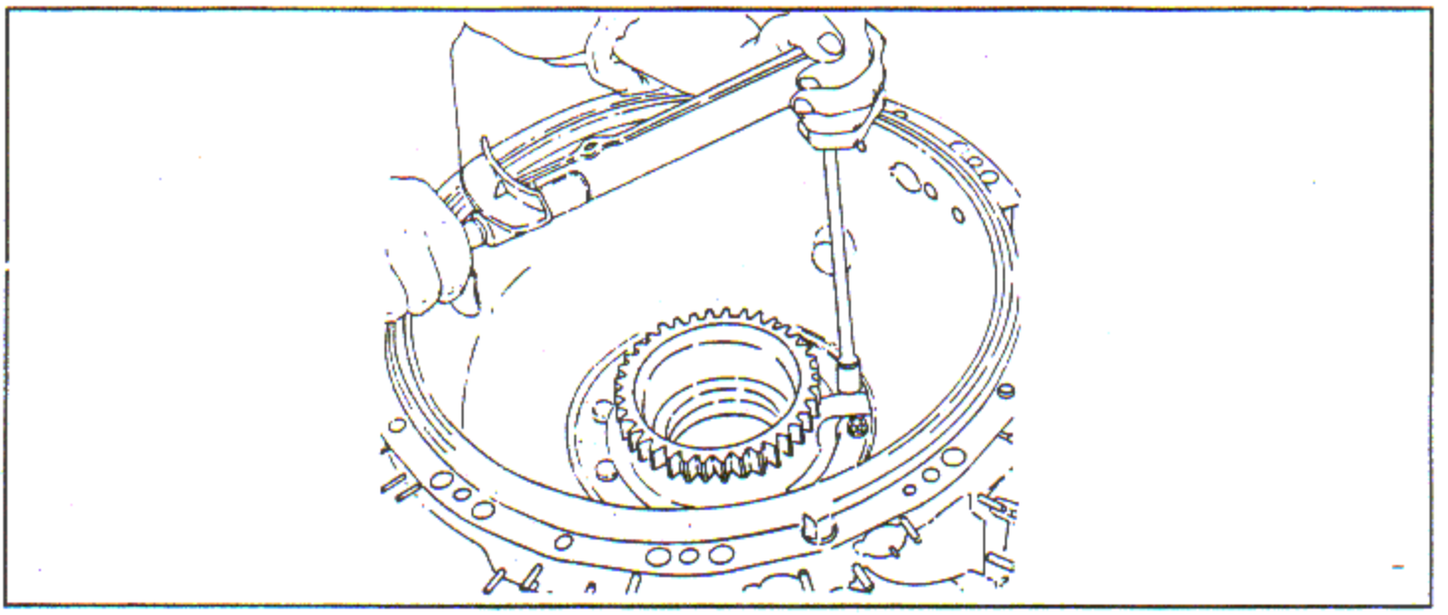

Figure 7-8. Torquing Stationary Reduction Gear Slotted Nuts (R1820-76 Series, -86A, -86B)

b. Install the governor drive gear and shaft from the interior of the crankcase front section and secure the drive gear shaft with a circlet in the groove of the shaft.

c. Select a thrust bearing having an outer race OD dimension not more than 0.001 inch less than the liner ID. Install the propeller shaft thrust bearing outer race, rollers and cage and the rear half of the inner race in the crankcase front section. Tap the outer race lightly to ensure proper seating.

d. Install the stationary reduction gear, the reduction driving gear pinion guard ring and secure with the two slotted nuts on the studs on either side of the stationary reduction gear lug.

e. Install two of the stationary reduction gear bolts temporarily to center the gear and guard ring. Torque the slotted nuts to the value specified in reference 901, Table of Limits, Section IX. See figure 7-8. Lockwire the slotted nuts to the holes in the guard ring. Remove the two bolts.

f. Turn the crankcase front section over and install the front half of the thrust bearing inner race. Install the crankcase front section flange gasket and flange maintaining proper alignment of the holes.

g. Insert the stationary reduction gear bolts from inside the crankcase front section with the flats on the head of the bolts against the edge of the flange of the stationary reduction gear. Secure each bolt with a circlet.

h. Install the crankcase front section flange spacer. Secure the bolts with nuts and washers and torque. Refer to reference 901, Table of Limits, Section IX for torque value. Lockwire the nuts in pairs.

i. Place the crankcase front section in stand, check the gap and side clearance of the propeller shaft thrust bearing spacer rings with references 23 and 24, Table of Limits, Section IX. Install the rings.

j. Install the spacer and ring assembly in appropriate detail sleeve, and using the sleeve as a guide, work the spacer and ring assembly into the crankcase front section. See figure 7-9. The flange of the spacer must be toward the front of the crankcase front section and the spacer assembly against the bushing. Remove the sleeve.

k. Heat a suitable propeller shaft thrust bearing spacer heating tool in hot oil, 177 - 205°C (350 - 400°F) for ten minutes. Insert the heating tool in the thrust bearing spacer and allow to remain for five minutes.

NOTE

A temperature controlled oven may be used as an alternate means of heating the spacer heating tool to the specified temperature.

l. Remove the tool. Install propeller shaft assembly. Turn the crankcase front section over. In-

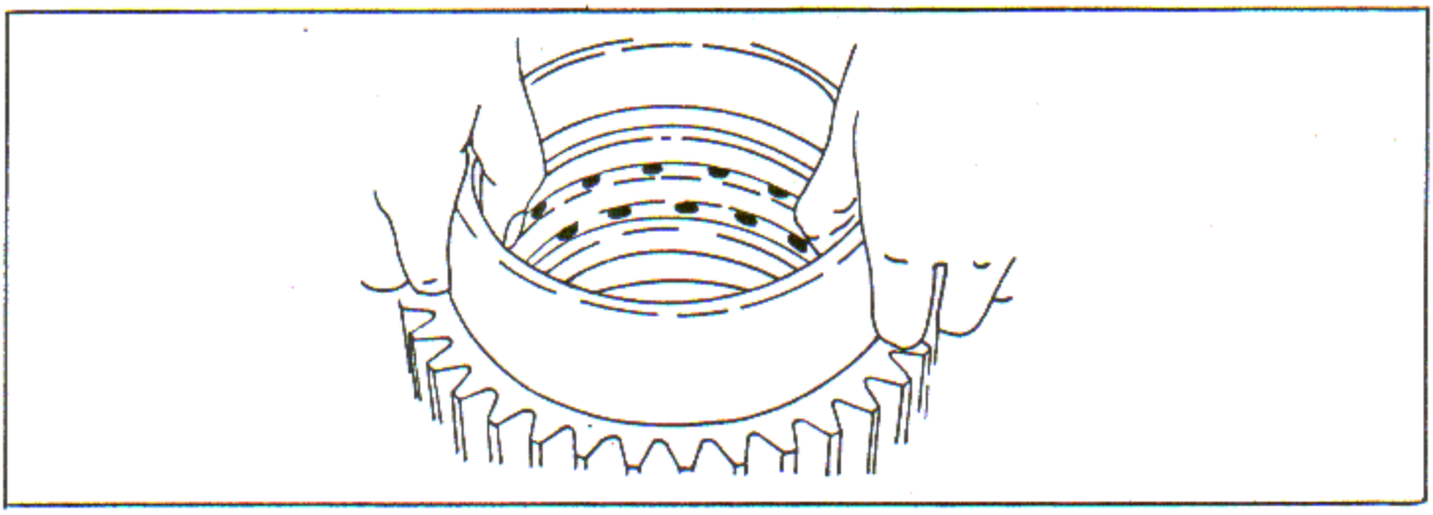

Figure 7-9. Installing Propeller Shaft Thrust Bearing Spacer

stall the thrust nut, omitting the rings temporarily, and tighten until it rests against the bearing. Remove the nut.

m. Check the gap and side clearance of the propeller shaft thrust bearing nut oil seal rings against references 19 and 20, Table of Limits, Section IX. Install the bottom ring inside the crankcase front section flange and the other two rings on the thrust nut.

n. Coat the threads on the thrust nut with anti-seize compound, Federal Specification TT-A-580a. and coat the rings with engine oil. Use a fiber drift to work rings as nut is being turned down. Tighten the nut until bottom ring makes contact. Install the propeller shaft hydro-oil connection gasket and adapter.

7-13. CRANKCASE FRONT SECTION COMPLETE ASSEMBLY (R1820-80 SERIES). (See tool groups 17 and 125.)

7-14. STATIONARY GEAR, SUPPORT AND THRUST BEARING SPACER AND BEARING.

a. Place the propeller shaft assembly on a bench. Install the stationary gear on the assembly to mesh with the reduction gear pinions. Locate the pinion guard ring.

b. Run down two aligning studs 180 degrees apart in the stationary gear.

c. Fit new oil seal rings in the thrust bearing spacer, establishing the gap and side clearance specified in references No. 23 and 24 in the Table of Limits, Section IX. Lubricate the assembly with engine oil. Use the applicable detail sleeve. See figure 7-9. Compress the rings and insert the spacer assembly in the stationary gear support with the flanged end of the spacer toward the front.

d. Heat a suitable tool in an oil bath maintained at 177° - 205°C (305 - 400° F) for ten minutes. Insert the tool into the spacer and leave it there for five minutes. Remove the tool and immediately guide the support and spacer over the propeller shaft assembly until the flange of the spacer is firmly seated on the propeller shaft shoulder. See figure 7-10.

e. Heat the thrust bearing inner race in an oil bath maintained at 177 - 205°C (350 - 400° F) for ten minutes. Install the rear half of the inner race so that it bottoms on the spacer. Install the ball and cage assembly, and the outer race. Install the front half of the inner race.

f. Run down the thrust bearing nut to keep the parts seated while cooling. Remove nut.

g. Lubricate the thrust bearing retainer in the crankcase front section with engine oil. Lower the case over the propeller shaft assembly and tap it into place, seating the lip of the thrust bearing retainer against the thrust bearing outer race.

h. Install the crankcase to stationary gear support washers and screws in the two counterbored holes in front of the case. Torque the bolts to the value specified in reference 950 in the Table of

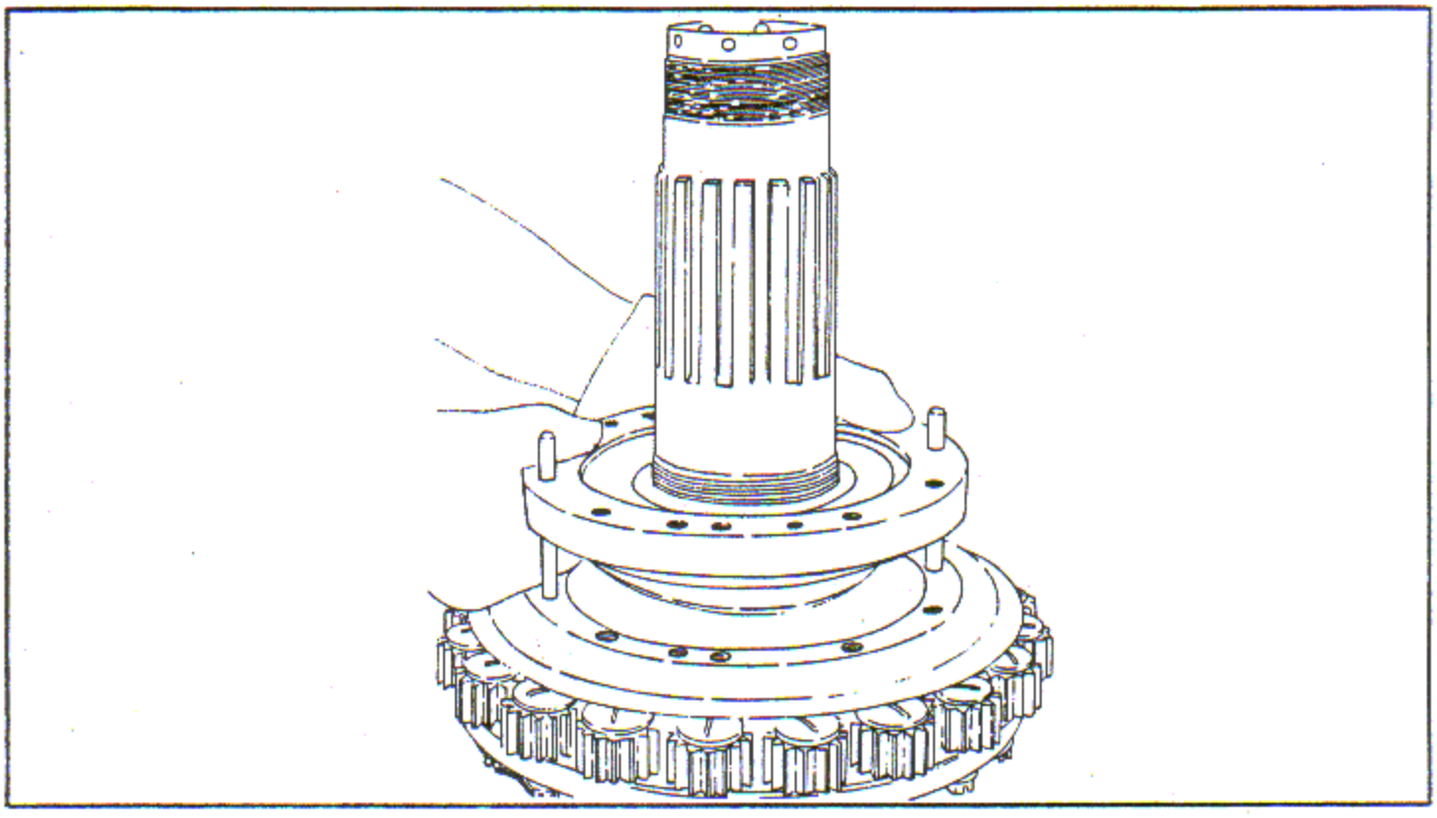

Figure 7-10. Installing Stationary Gear Support and Thrust Bearing Spacer on Propeller Shaft Assembly (R1820-80 Series)

Limits, Section IX. Remove the aligning studs from the stationary gear. Remove the thrust bearing nut.

i. Locate a new gasket on the front of the crankcase, mating the holes accurately with the screw holes. Position the front section flange and the spacer. Install the front section flange to crankcase washers and screws. Torque the screws to the value specified in reference No. 901 in the Table of Limits, Section IX. Lockwire the screws in pairs.

j. Check the side clearance and gap of the propeller shaft thrust bearing nut oil seal rings. See references No. 19 and 20 in the Table of Limits, Section IX. Install the rear ring inside the crankcase front section flange. Install the other two rings on the thrust nut.

k. Coat the threads on the nut with anti-seize compound, Federal Specification TT-A-580a, and coat the rings with engine oil. Compress the rings and run the thrust nut down until it makes contact with the rear ring. Install the propeller control of supply connection gasket and adapter.

7-15. PROPELLER HYDRAULIC LEAKAGE TEST. (See tool group 99.)

7-15A. If leakage from the propeller hydraulic passages is excessive or restrictions impede the flow it may be quite difficult to feather the propeller. Test the oil passages under an oil pressure of 600 pounds per square inch to determine the flow which should be from 1.5 - 3.5 pounds per minute.

a. Provide a test stand with an oil reservoir (5, figure 7-11), seal, a heat exchanger (7), pressure gage (9), temperature gage (8), a pump (3) and the necessary valves (11) to deliver the heated oil to the governor passages at 600 pounds per square inch.

b. Provide an adapter plate of half-inch steel to fit the studs of the governor drive adapter in place of the substituting cover. See figure 7-12.

c. Install a gasket and the adapter plate on the governor drive adapter.

d. Substitute a steel cover for the hydro-oil connection substituting cover. Fabricate this cover to the same dimension as the regular engine part.

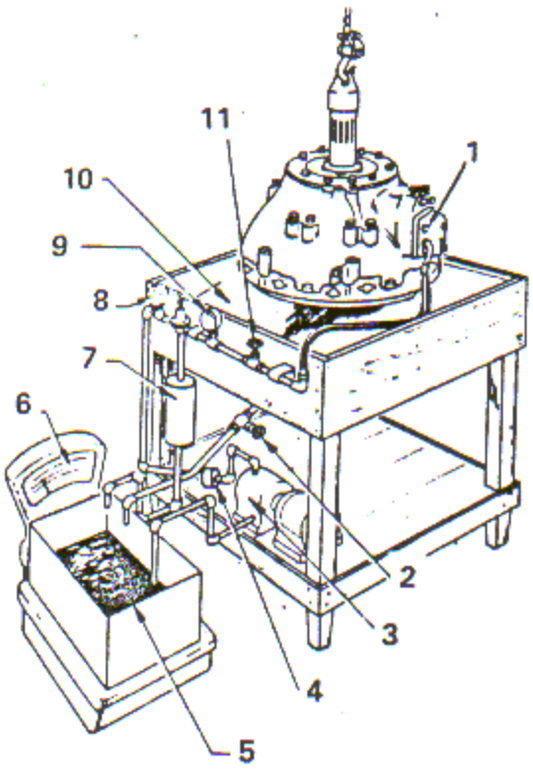

1. ADAPTER PLATE
2. SUMP VALVE
3. OIL PUMP
4. 10 MICRON HIGH PRESSURE OIL FILTER
5. OIL RESERVOIR
6. SCALE
7. HEAT EXCHANGER
8. TEMPERATURE GAGE
9. PRESSURE GAGE
10. SUMP
11. HIGH PRESSURE GLOBE VALVE

Figure 7-11. Stand Assembly for Propeller Hydraulic Leakage Test

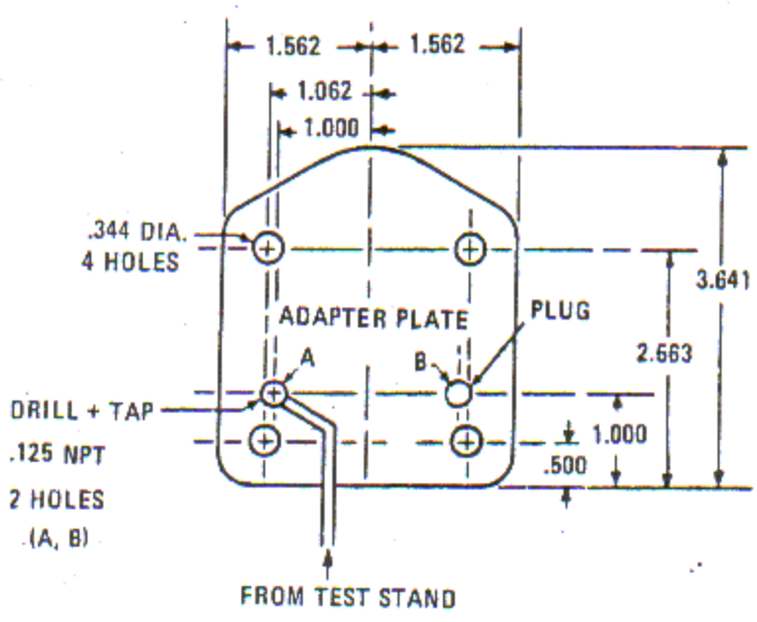

Figure 7-12. Adapter Plate for Checking Propeller Hydraulic Passages

e. Install a gasket under the steel cover and secure with the regular cover nut. Install hoist eye on the propeller shaft. Attach a chain hoist and suspend the crankcase front section over the test stand.

f. Attach the oil supply hose to hole A, figure 7-12, ensuring that hole B is plugged. Close the high pressure globe valve and the sump valve.

NOTE

Use oil conforming to MIL-L-2104, Grade 10, maintained at a temperature of 29°C ± 3° (85°F ± 5°). Equivalent oils are SAE 10 maintained at 32° C (90° F) and either MIL-L-15016 Military Symbol 2110 or MIL-L-17672 Military Symbol 2110 T-H oils maintained at 29°C ± 3° (85°F ± 5°). This corresponds to engine oil operating at 85°C (185°F). Deviations in grade, temperature or pressure will give erroneous rates of leakage.

g. After heating the oil to the proper temperature, build up the pressure to 600 pounds per square inch. Open the high pressure valve and allow oil to enter the crankcase front section until oil begins to drain from the case into the sump. Turn the high pressure valve off and immediately record the weight of the oil in the reservoir.

h. Open the valve and maintain the flow of oil at 600 pounds per square inch for two minutes, using a suitable timer. Record the weight of the oil remaining in the reservoir. The difference between the two weights is the rate of leakage.

i. If the leakage is more than 3.5 pounds per minute, disassemble the crankcase front section and check for excessive clearance, missing oil seals or incorrectly fitted oil seal rings.

j. If the leakage is less than 1.5 pounds per minute, check for restrictions in the oil passages. Remove the hoist eye and the propeller control oil connection substituting cover. Remove the propeller shaft nut and plug. Slowly apply pressure at the governor end. A no-flow condition is indicative of a plugged passage. If restrictions are indicated, check for correct assembly.

7-16. PROPELLER SHAFT HYDRO-OIL CONNECTION SUBSTITUTING COVER AND NUT.

a. Install the propeller shaft hydro-oil connection substituting cover gasket and cover. Install the nut finger tight.

b. Install the nut lock so that the lugs on lock are located in grooves in the propeller shaft. Align the three screw holes in the nut lock plate with the holes in the nut by rotating the lock plate 180 degrees or by reversing the lock plate.

c. Secure temporarily with the three screws and washers.

7-17. MISCELLANEOUS.

a. Install gasket and governor substituting cover.

b. Install the external hydro-oil supply front tube union elbow on Model R1820-76 and -80 series engines.

c. Install the external hydro-oil front tube connector and external hydro-oil supply extension to governor mounting pad elbow connection on Model R1820-86A and -86B engines.

7-18. CRANKSHAFT REAR END ASSEMBLY. (See tool groups 3 and 14.)

NOTE

The major components of a crankshaft assembly bear matching numbers and must be reassembled together. The numbers are stamped on the crankshaft front and rear ends and on each of the four counterweight halves. The crankcheek screw and washer also bear mating numbers even though the units are replaceable.

a. Select an accessory drive and starter shaft coupling with a fit indicated in reference 233, Table of Limits, Section IX.

b. Chill the accessory drive and starter shaft coupling in dry ice and alcohol.

c. Install the coupling, tapered end forward, in the crankshaft rear end. Use plug and collar to drive it down. Install the lock circlet.

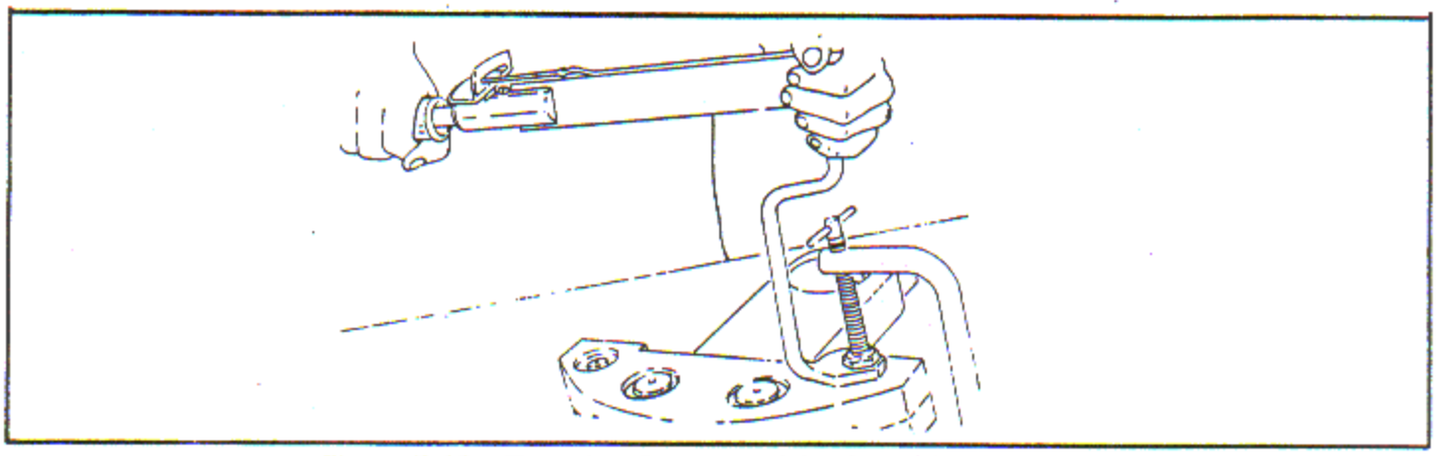

Figure 7-13. Torquing Counterweight Attaching Bolt Nuts

d. Install the two rear counterweight crankshaft bushings, using a loose fit as in reference 227, Table of Limits, Section IX.

NOTE

Do not allow the bushings to project beyond the front and rear faces of counterweight.

e. Ensure the numbers of the two halves of the rear counterweight are mated with the crankshaft rear end number. Coat the two counterweight pins with anti-seize compound, Federal Specification TT-A-580a.

f. Install the proper half of the counterweight on each side of the rear crankcheek and insert the counterweight pins through the counterweight halves and crankshaft.

g. Place a new cup in each of the two bolt holes in the rear half of the counterweight, mating the scallops. Insert the two bolts from the rear through the counterweight halves and the crankcheek. Place cups over the ends of the two bolts and install the nuts.

h. Place adapter A on the head of bolt and adapter B on the nut. Retain the adapter with clamp wrench A. Tighten the nuts with wrench B to value specified in reference 906, Table of Limits, Section IX. See figure 7-13.

i. Bend the rim of each cup into the opposite sides of a slot in the nut and bolt with punch.

j. The clearance between the rear counterweight and crankcheek should conform with reference 228, Table of Limits, Section IX.

7-19. CRANKSHAFT FRONT END ASSEMBLY. (See tool group 14.)

a. Select a crankshaft crankpin sludge retaining plug with a fit as indicated in reference 211, Table of Limits, Section IX. Using engine oil, lubricate two oil seal rings and install them on the plug.

b. Lubricate the plug O.D. and the crankpin I.D. liberally with engine oil. Align the tapped hole in the plug with the hole provided for the piston oil jet valve on top of the crankshaft and insert the plug. With the aid of a flashlight inspect the three crankpin holes for evidence of rubber particles. If found, remove the plug, clean out the particles, install new oil seal rings and reinstall the plug.

c. Reassemble the piston oil check valve by inserting the ball, spring, spring stop and nozzle in the body. Align holes in side of nozzle and body; insert a rivet. Peen the end of the rivet. Test the valve action as instructed in paragraph 6-87.

NOTE

Use a new ball, spring and stop at each overhaul and ensure that the valve body has been tin-cadmium plated.

d. Install the tab lock washer on the check valve body so that it cups the head of the valve body. Insert the valve into the crankshaft and engage the threads in the crankpin oil retaining plug. Seat the lock washer in the relief of the shaft and torque the

valve to the value indicated in reference 914, Table of Limits, Section IX. Bend the tab of the lock washer against any face of the piston oil check valve even if it is not symmetrical.

e. Chill the crankshaft breather substituting plug, using standard shop practices, to -57°C (-70°F). Install the plug in crankshaft, aligning the hole in plug with threaded hole in crankshaft. Place the lock washer with the tab engaged in the drilled hole in the plug, insert the screw and tighten, bend the tab of lock washer against head of screw.

f. Ensure that the numbers of the propeller and anti-propeller halves of the front counterweights are the same as the number on crankshaft front end. Coat the counterweight pins with anti-seize compound, Federal Specification TT-A-580a.

g. Install proper half of counterweight on each side of crankshaft front end and insert the pins through the counterweight halves and the crankshaft.

h. Place the cups in front end of counterweight, mate the scallops. Insert bolts from the front, through the counterweight halves and the crankshaft. Install cups over ends of bolts, run down the nuts.

i. Place adapter A on the head of the bolt and adapter B on the nut. Hold the adapters in place with clamp wrench A. Using wrench B, torque to value given in reference 906, Table of Limits, Section IX.

j. Ensure that the clearance between the front counterweight and crankcheek is within the limits indicated in reference 225, Table of Limits, Section IX.

k. Bend the rim of the cup into the opposite sides of a slot in the nut and bolt with punch.

7-20. ARTICULATED AND MASTER ROD ASSEMBLY. (See tool groups 6 and 78.)

7-20A. To determine the master rod bearing size for use, measure the master rod bearing bore and the crankpin diameter as follows:

CAUTION

Do not, under any circumstances, identify the rods by metal stamping or electro-etching.

a. Measure the master rod bearing bore in the mid-plane of the bearing. Record the minimum diameter.

NOTE

All readings must be accurate within 0.0001 inch.

b. Measure the crankpin diameter in six locations taken in planes 1/2 inch from each end of the bearing journal and in the middle of the journal. One set of readings shall be taken in plane with the split in the rear section and the other set at 90 degrees to this plane. Record the maximum diameter measured.

NOTE

The clearance fit is the difference between the two recorded diameters.

c. Select a bearing to give the fits specified in references 212 and 213, Table of Limits, Section IX.

d. Wipe the master rod bearing and bore clean and coat the bearing with engine oil. Install the bearing in the master rod with the splined end toward the front of the engine.

e. Locate the knuckle pin locking plate against the master rod engaging the three slots with the unsplined areas of the bearing.

f. Place an articulated rod in the master rod. Install the correct size knuckle pin with the small diameter toward the front and the lip against the lug on the locking plate. Insert the knuckle pin locking bolt through the plate and pin. Secure the bolt with the lock washer and nut. The knuckle pin locking bolt and lock washer must conform to the provisions of PPC 28. Install all articulated rods in the same manner.

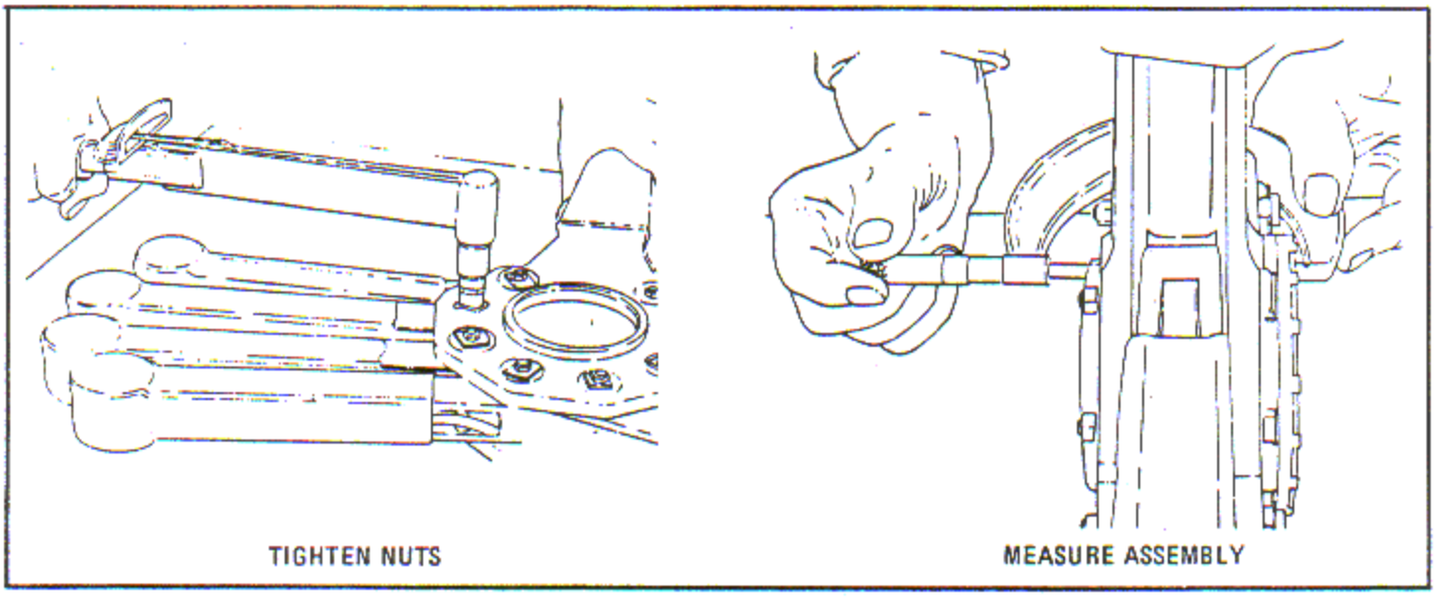

Figure 7-14. Tightening Knuckle Pin Bolt Nuts and Measuring Width of Master Rod Assembly

CAUTION

The clearance between the master rod hub OD and the articulating rod shall be 0.010 inch. After each articulating rod is assembled to the master rod, push the articulating rod toward the master rod hub and check clearance fore and aft through the normal arc of articulating rod travel.

g. Cover each articulating rod with protector.

h. The slotted end of the nut must face away from the master rod. Measure each bolt between centers before tightening the nuts. Tighten the nuts to obtain 0.006 - 0.009 inch bolt stretch. Check using gage. See figure 7-14.

NOTE

After tightening nuts use crimping tool and crimp the exposed bolt threads at the slot of each nut. Each end of the crimping tool should be firmly seated in the slot bottom during crimping.

i. Install the master rod oil seal disc.

NOTE

If the front crankshaft thrust face has been machined, use an oversize oil seal disc to compensate for the material removed. The amount of material removed is marked at the right of the oil jet hole as viewed from the rear of the shaft.

j. Measure the width of the master rod assembly as shown in figure 7-14 and record the figure. Do not install the master rod spacer at this time.

7-21. CRANKSHAFT AND MASTER ROD COMPLETE ASSEMBLY. (See tool groups 22, 23 and 29.)

NOTE

Refer to the NOTE prior to step a in paragraph 7-18.

a. Install two bushings which are part of stand on the forward end of the crankshaft front end.

b. Install the crankshaft front end in stand and secure the two clamps of the stand over each bushing.

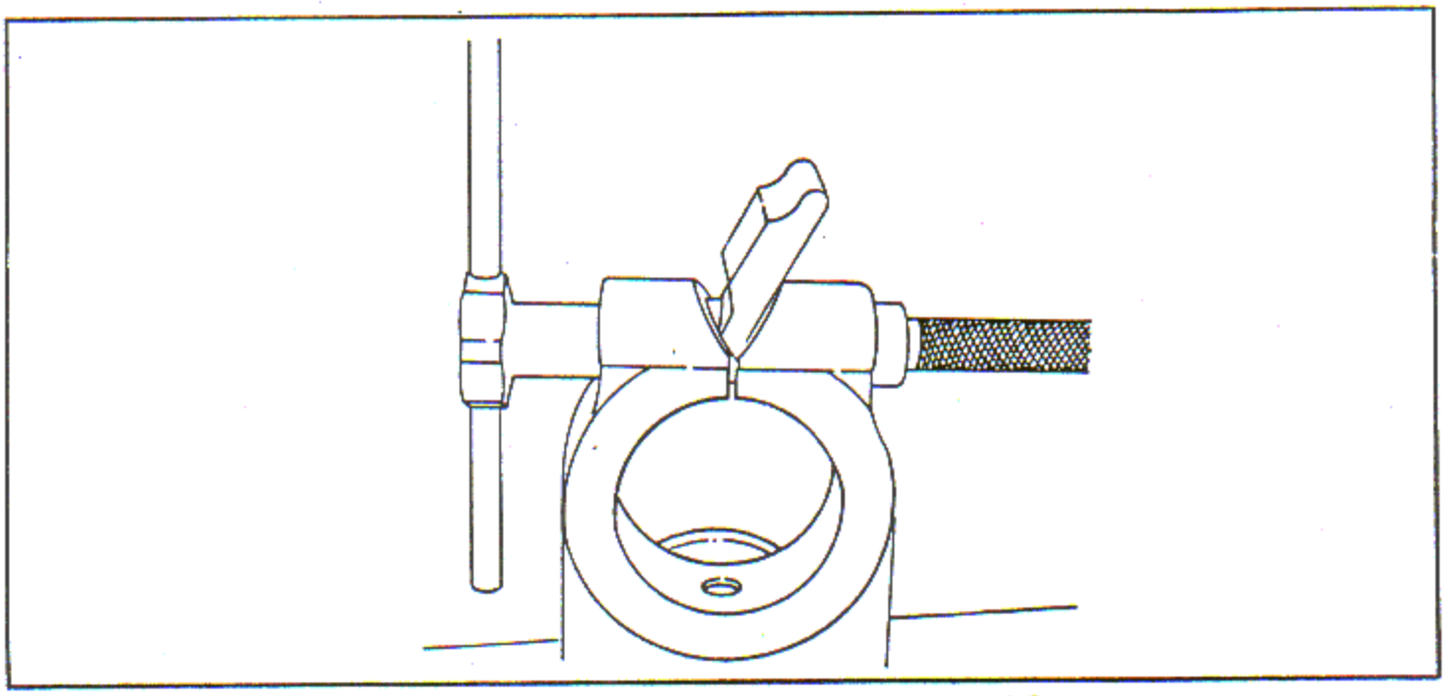

Figure 7-15. Installing Spreader Screw, Plug and Stop

NOTE

Ensure that the clamp block supporting the front end of the crankshaft is in the correct position. The clamp block is adjustable.

c. Insert plug in the unthreaded end of the crankcheek screw hole of the crankshaft rear end. Secure the plug by inserting stop into the slot.

d. Apply a light coat of Federal Specification TT-A-580a, anti-seize compound, on the threads of the screw. Screw the threaded end into the crankcheek hole. Tighten the screw to spread the crankcheek. See figure 7-15.

e. Slide the crankshaft rear end on the crankpin far enough to obtain a measurement of 7.062 inches from the front bearing journal to the rear bearing journal. See figure 7-16.

f. Measure the distance between the rear surface of the front crankcheek and the front surface of the rear crankcheek with a five inch telescoping gage. Record this measurement. Remove the crankshaft rear end from the crankpin.

g. Determine the size of the master rod spacer needed by subtracting the width of the master rod assembly, previously determined in paragraph 7-20, step j from the measurement determined in step f of this paragraph and subtract 0.030 inch. The 0.030 inch figure represents a desirable clearance within these limits.

NOTE

Use only thick rim type spacer which may be identified by 4.260 inches OD dimension. Thin rim type spacer has been superseded without a part number change and may be identified by 4.160 inches OD dimension.

h. Clean and lubricate the crankpin and the inside of the master rod bearing. Install the master rod assembly and the master rod spacer which was selected. The spacer should be installed to cup the master rod.

i. Clean the mating surface in the rear crankcheek and the area of the crankpin over which the crankcheek will be clamped with carbon tetrachloride. Allow it to dry thoroughly and inspect.

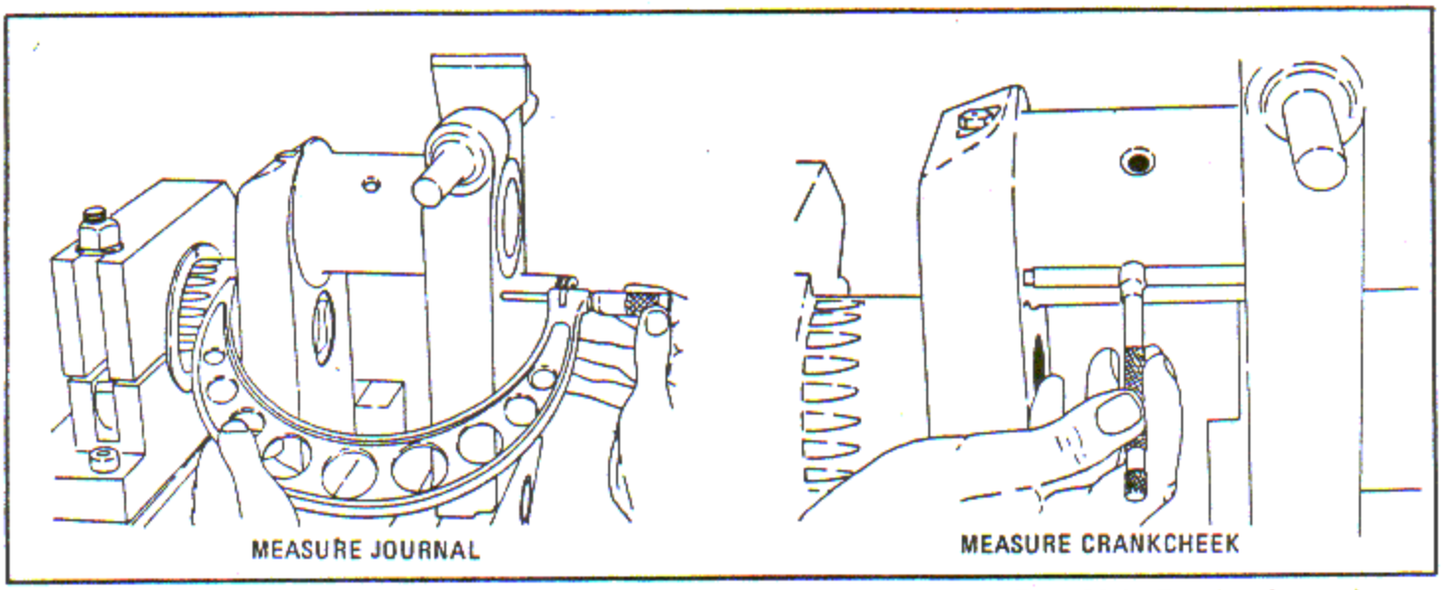

Figure 7-16. Measuring Distances From Front Main Bearing Journal to Rear Main Bearing Journal and Rear Surface of Front Crankcheek and Front Surface of Rear Crankcheek

CAUTION

Do not handle either surface after cleaning. No lubricant is permitted on these surfaces in order to ensure effective clamping action.

j. Hold a 0.030 inch feeler of assembly feeler gage in place beside the master rod and install the crankshaft rear end on the crankpin. See figure 7-17. Locate the rear crankcheek radially so that the sides are parallel with those of the front crankcheek. Remove the plug, stop and screw from rear end.

k. Apply anti-seize compound, Federal Specification TT-A-580a, to the crankcheek screw. Install the screw finger tight. Investigate any screw tightness during installation. Measure the free length of the screw with measuring tool and a 5 - 6 inch micrometer. Record this measurement.

m. Separate the articulated rods into two groups of four on each side of the master rod and wrap a cylinder oil seal ring around each group. Raise the alignment checking rollers under the rear end of the crankshaft to full extent. Unclamp the crankshaft front end and raise the alignment checking rollers under the front end of the crankshaft.

NOTE

One man should hold the shaft while another raises the rollers.

n. Lower the rear rollers until the crankshaft is level. Turn the bronze knob on the rear platform of the stand up until it contacts the rear counterweight.

o. Install a dial indicator on the crankshaft front end and check runout at the front propeller shaft bushing location an inch or so in front of the front clamp as shown in figure 7-18. The runout specified in reference 17, Table of Limits, Section IX, must be maintained.

p. If the runout is not within limits, loosen the crankcheek screw and strike the rear counterweight on the side that will change the radial position of the crankcheek to improve alignment. Retighten the screw and recheck the runout. Check the runout at the rear propeller shaft bushing location, an inch or so in front of the rear clamp.

q. When the crankshaft alignment is correct, secure the crankshaft stand clamps over the shaft and lower the rollers.

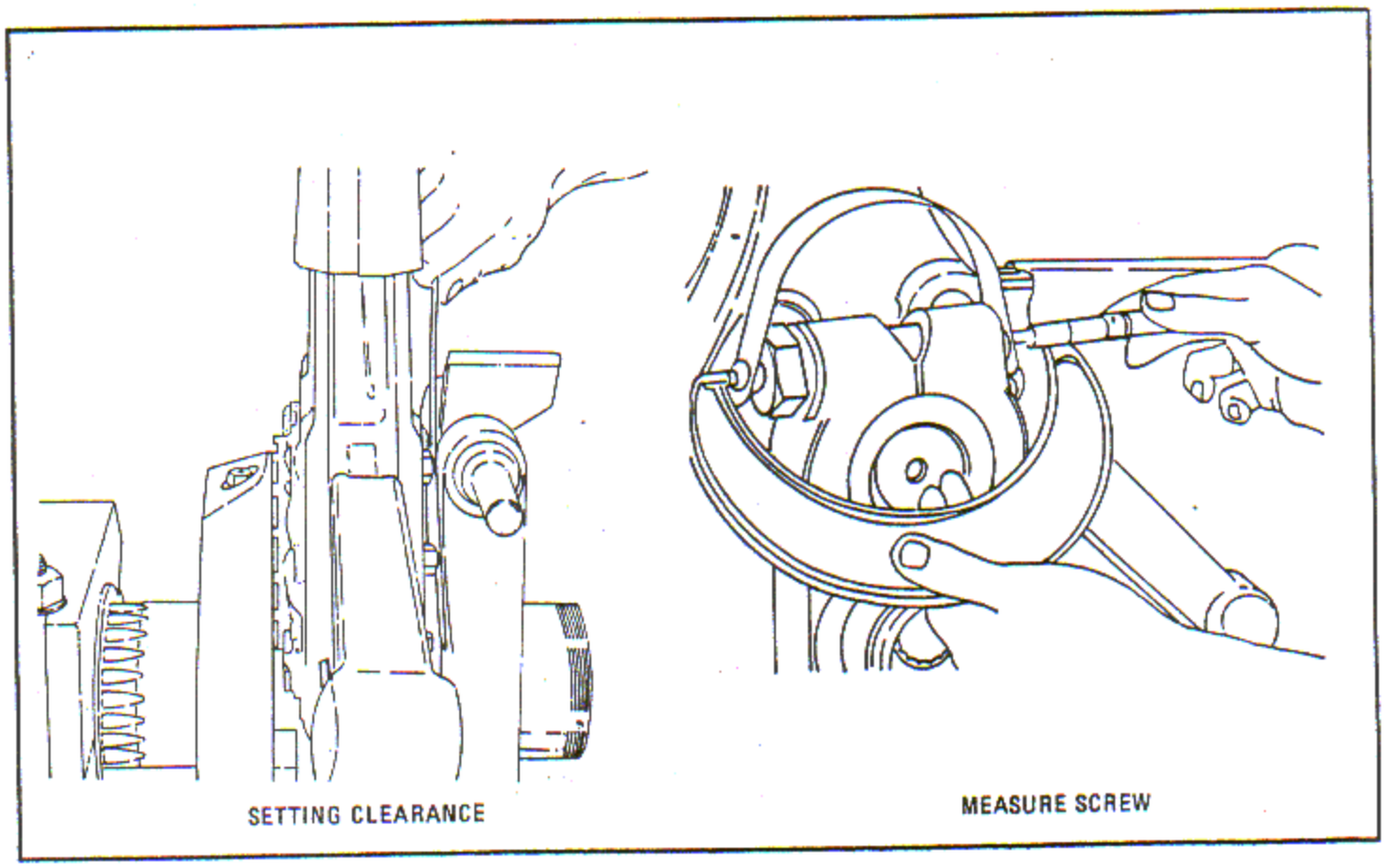

Figure 7-17. Setting Master Rod End Clearance and Measuring Free Length of Crankcheek Screw

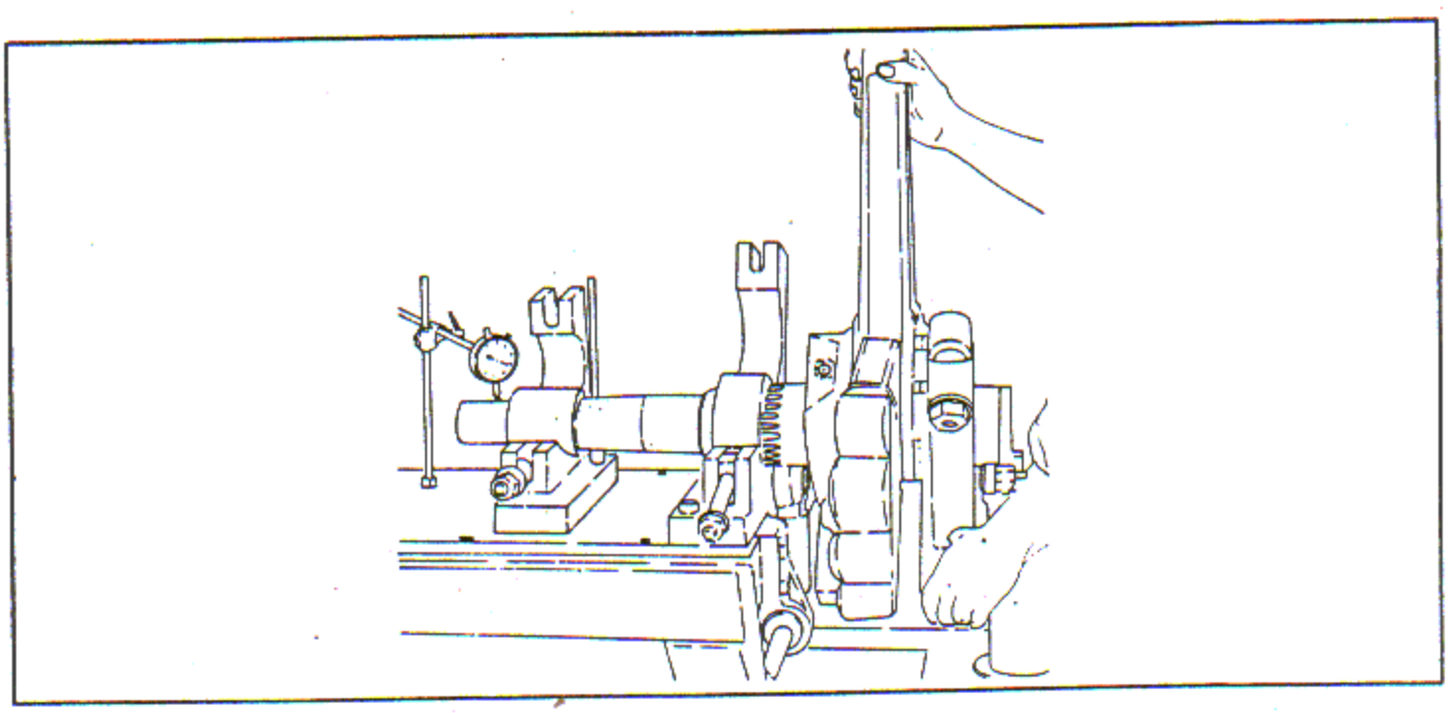

Figure 7-18. Checking Crankshaft Runout

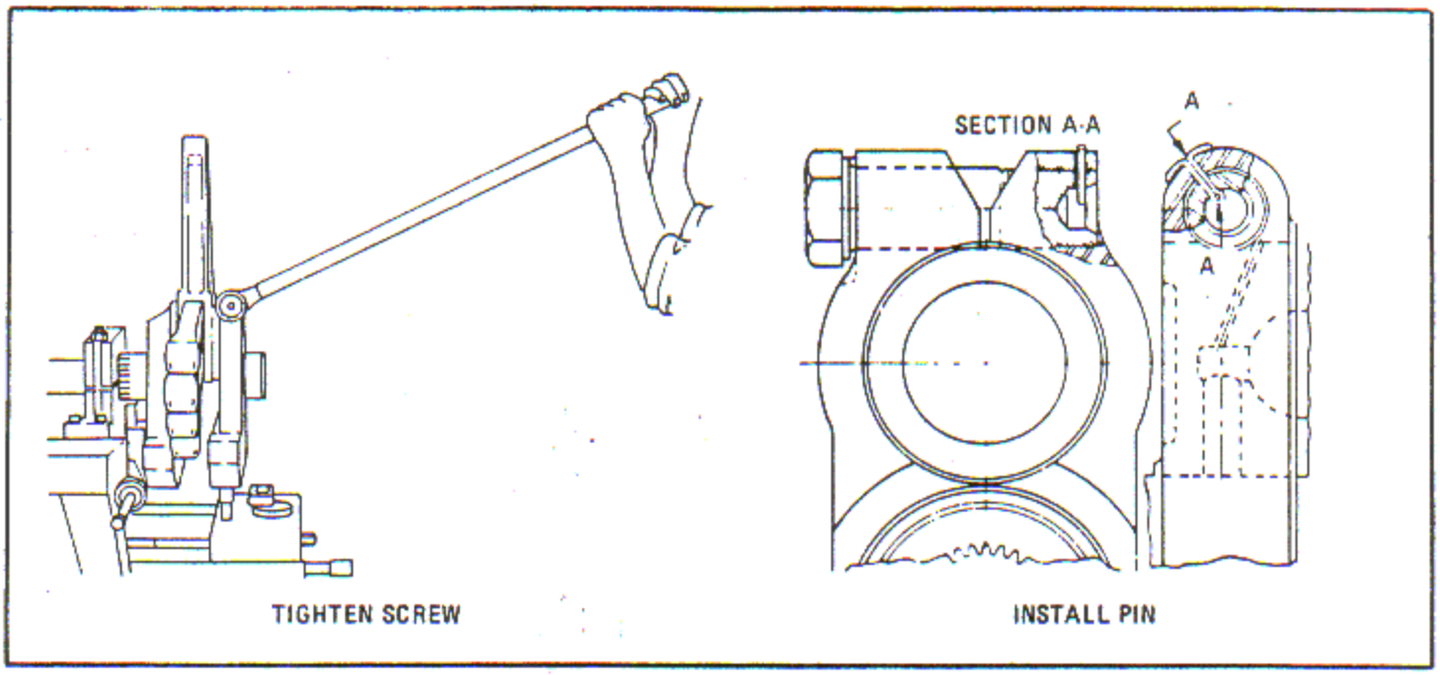

Figure 7-19. Tightening Crankcheek Screw and Installing Cotter Pin

r. Tighten the crankcheek screw using wrench and extension. See figure 7-19. Check the crankshaft runout and the master rod clearance.

s. Check the crankcheek screw stretch with measuring tool against reference 230, Table of Limits, Section IX. Stretch is figured in comparison with the dimension recorded for free length of the screw.

t. If the crankcheek screw hole is not aligned with the hole in the crankcheek when the screw is tightened to within the proper stretch limits, select another washer of a thickness which will permit alignment of the holes. Stamp the crankshaft mating number on the washer OD.

NOTE

In the event alignment of the holes cannot be made using over or under sized thickness washers to obtain specified stretch, it is permissible to drill a new hole in the screw using the hole to the crankcheek as a template. The new hole must be located so that it is no closer than 0.100 inch to the original hole in the screw. Remove any burrs from the screw after the drilling operation.

u. Insert the crankcheek screw cotter pin through the screw from the inside. Bend the ends apart with the flat against the crankshaft. See figure 7-19.

7-22. REAR MAIN BEARING INSTALLATION. (See tool group 31.)

NOTE

Prior to installation of the inner race, turn the rear main bearing nut onto the crankshaft and hand tighten until it bottoms on its threads. The gap between the nut and the crankshaft thrust face must be less than 1.144 inches.

a. Heat the rear main bearing inner race in oil at 121°C (250° F) for five minutes.

b. Install the inner race over the crankshaft rear end with the flange toward the front of the engine. Tap it lightly with a mallet and fiber drift until it is seated. Check with a 0.001 inch feeler gage to ensure that the inner race is properly seated. Install the outer race, rollers and cage.

NOTE

Ensure that the bearing has a minimum residual internal radial looseness of 0.0005 inch. Check the bearing for adequate cage clearance. Refer to Table 6-7, Section VI.

c. Ensure that all surfaces of component parts are clean and free of nicks. Lubricate the thrust face of the inner race and the threads of the retaining nut with clean engine oil. Assemble and torque the nut using lug wrench and torque wrench, as instructed in reference 208, Table of Limits, Section IX.

NOTE

If there is any indication of binding between the protrusion on the locking screw and the crankshaft when the screw is driven into the retaining nut, select a different nut. If binding persists, use a nut which has been chrome plated up to 0.010 inch thick, in accordance with standard procedures, on the flanged face.

d. Coat the locking screw threads with engine oil and assemble the cup washer. Torque the screw to the value in reference 921, Table of Limits, Section IX.

e. Secure the screw by staking the lip of the cup washer into the slot in the screw head.

7-23. GOVERNOR INTERMEDIATE DRIVE GEAR AND CAM INTERMEDIATE DRIVE GEAR ASSEMBLY. (See tool group 11.)

7-23A. Locate the governor gear on cam intermediate drive gear. Install the attaching screws. Install the assembly in fixture and place fixture in vise. Torque the attaching screws. See figure 7-20. Lockwire the screws in pairs.

7-24. CAM ASSEMBLY (R1820-76 SERIES, -86A AND -86B). (See tool group 8.)

a. Lubricate the inside surface of the cam and the outside surface of the cam and oil sump pump drive support. Install the cam with the cam gear on the side opposite the large boss on the support.

b. Put the support and cam, gear down, on a bench. Place the four arc-shaped cam guides "prop end" up in position in the groove inside the cam and against the cam support. Attach each guide with three screws and washers. Install the assembly in fixture and tighten the guide attaching screws. Tighten to the torque specified in reference 904, Table of Limits, Section IX. Lockwire the screws.

c. Install the oil sump scavenge pump driven coupling gear in the bushing in the cam support with the gear at the front.

d. Install the oil sump scavenge pump drive shaft gear in the gear support with the gear against the flange of the bushing. Place a gasket on the mounting face of the gear support and locate the support over the pins on the front of the cam support with the gear meshing with the coupling gear. Attach the gear support to the cam support with two long screws. Lockwire the screws together.

NOTE

The other screw hole is for a cam support to crankcase attaching screw.

e. Install the cam to oil sump scavenge pump driven coupling gear pinion over the splines of the coupling gear, insert the retaining bolt from the rear and install and torque the attaching nut to 70-100 inch-pounds. Insert a cotter pin and bend both legs of the cotter pin around OD of the nut.

f. Hold the cam intermediate drive gear pinion on the rear side of the support so that the tooth marked with an ellipse meshes with the two teeth with ellipse marks on the cam. Install the cam intermediate drive gear and governor driving gear assembly so that the ellipse mark on the spline of the cam intermediate drive gear is between the ellipses on the face of the pinion. See figure 7-21. Insert the retaining bolt from the rear and install and torque the attaching nut to 70-100 inch-pounds. Insert a cotter pin and bend both legs of the cotter pin around the OD of the nut.

7-25. CAM AND SECOND ORDER BALANCE-WEIGHT ASSEMBLY (R1820-80 SERIES). (See tool groups 7 and 8.)

a. If they have been removed, chill four balance-weight and two intermediate drive gear retaining

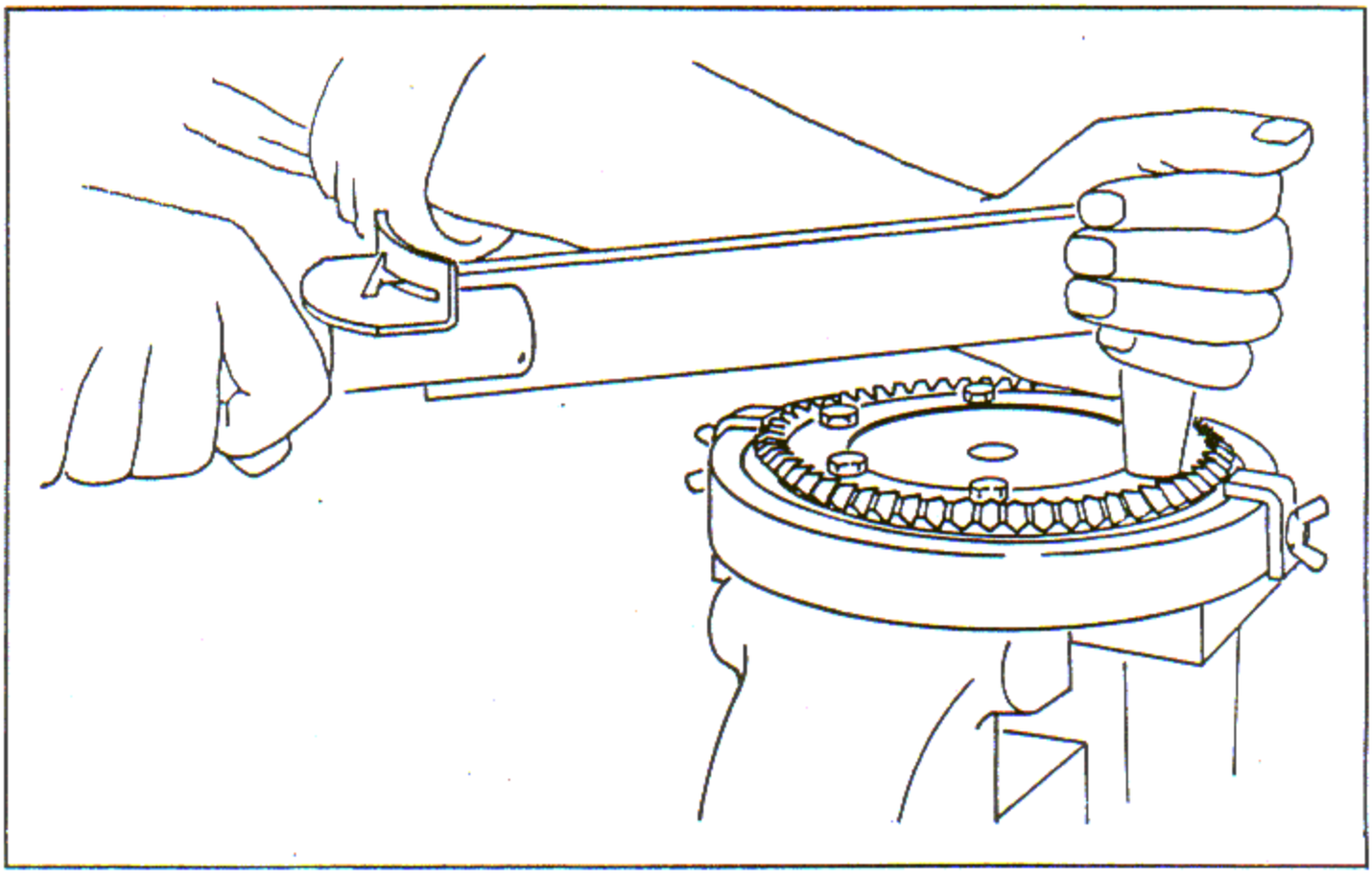

Figure 7-20. Torquing Governor Driving Gear to Cam Intermediate Drive Gear Screws

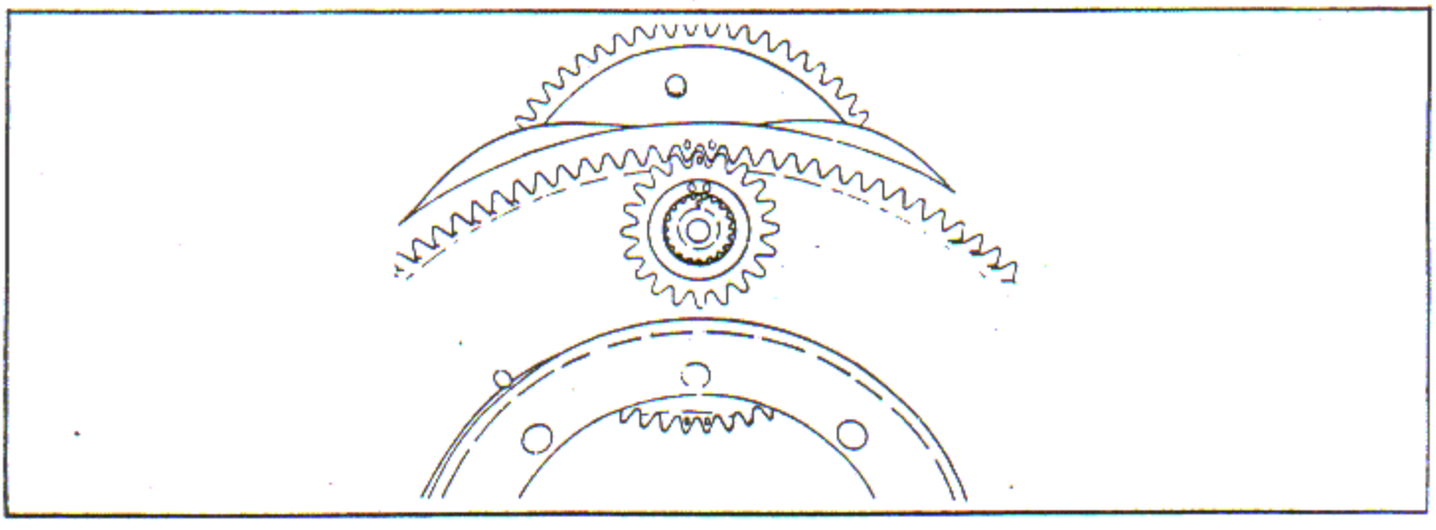

Figure 7-21. Timing Marks Aligned on Cam Assembly (R1820-76 Series, -86A, -86B)

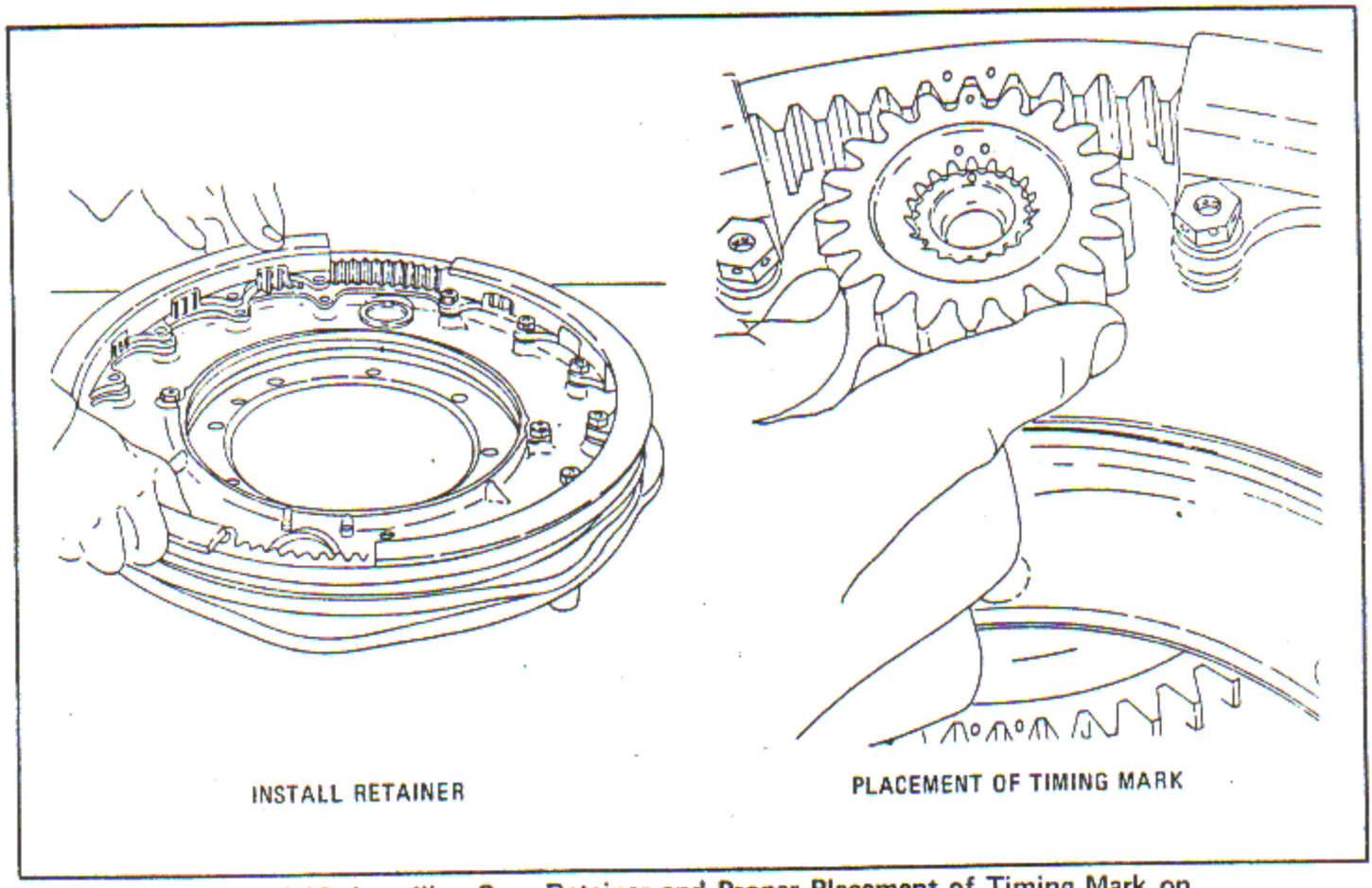

Figure 7-22. Installing Cam Retainer and Proper Placement of Timing Mark on Assembly (R1820-80 Series)

bolts using standard shop practice to -57°C (-70°F), prior to assembly. Install them in the cam support.

b. Lubricate the cam liberally with engine oil and locate it on the support. Position both halves of the retainer and secure the parts with washers and bolts. See figure 7-22. Place the cam and support assembly on fixture. Tighten and torque the bolts to 100 - 110 inch-pounds and lockwire the bolts in pairs. Remove the assembly from the fixture.

c. Install the oil sump scavenge pump driven gear in its support.

d. Install the oil sump scavenge pump driven coupling gear in its boss in the cam support.

e. Use a new gasket and locate the oil sump scavenge pump drive shaft gear and support on the cam support and secure the assembly with the two attaching bolts. Place the cam and support assembly on fixture. Tighten and torque the bolts to 100 - 110 inch-pounds and lockwire. Remove the assembly from the fixture.

f. Position the cam to oil sump scavenge pump driven coupling gear pinion over the splines of the coupling gear, insert the coupling gear and pinion retaining bolt from the rear and install the attaching nut finger tight.

g. Position the cam drive intermediate gear pinion on the rear side of the cam support so that the pinion tooth etched with an ellipse meshes between the two cam teeth etched with ellipses.

h. Install the cam drive intermediate gear and governor drive intermediate gear assembly and mesh the ellipse-etched spline of the shaft with the two ellipse-etched teeth on the face of the pinion. Insert the retaining bolt from the rear and install the nut finger tight.

i. Lubricate the second order balanceweight gear and intermediate gear trunnions. Place the bushings, flange down, over the trunnions.

j. Check the location marks on the gears and on the cam support.

k. Position the balanceweight gears and intermediate drive gears as shown in figure 7-23.

NOTE

Do not disturb the alignment of the gears already installed.

l. Read the timing letters viewed facing the cam assembly. Position the double ellipses on the intermediate gears to face each other at the horizontal center line of the engine. Use the letters T-R and B-R to locate the top right and bottom right balanceweight gears, each in relation to a single ellipse on the right intermediate gear. Use T-L and B-L to locate the top left and bottom left balanceweight gears, each in relation to a single ellipse on the left intermediate gear.

m. Secure the balanceweight drive gears and the balanceweight gears with retaining nuts, using wrench. The balanceweights have left-hand threaded nuts. Torque the nuts, refer to references 917 and 918, Table of Limits, Section IX.

n. Torque the retaining nuts for the intermediate cam and governor drive gear and oil sump scavenge pump drive coupling gear to 70 - 100 inch-pounds. Test the cam for freedom of movement. Cotter pin the cam drive intermediate gear assembly retaining nut. Insert a cotter pin in the oil sump scavenge pump drive gear retaining nut. Bend the legs of the cotter pin around the OD of the nut.

o. Install cotter pins in the balanceweight gear and balanceweight drive gear retaining nuts. Spread the legs of the cotter pins.

p. Place the assembly where the gear alignment will not be disturbed.

CAUTION

The cam and balanceweight mechanisms must be in correct timing position when the assembly is installed on the front main section, when the front main section is installed over the crankshaft, and when the reduction driving gear is installed.

7-26. CRANKCASE MAIN SECTION ASSEMBLY. (See tool groups 10, 20 and 115.)

a. Heat the crankcase main section front to 83°C (180° F) in a suitable oven. Apply a light film of engine oil to the bearing retaining ring and the crankcase ring bore mating surfaces. Install two suitable aligning pins in the retaining ring and install the ring in the crankcase. Remove the aligning pins and insert two engine cap screws to retain the ring until the crankcase cools.

NOTE

Remove the cap screws after the section has cooled.

b. Replace any dowels that were removed from the parting surfaces of the crankcase front and rear main sections with installing tool. See figure 7-24. There are six dowels in the rear main section and 14 dowels in the front main section. Coat the dowel packing rings with a light coat of MIL-G-6032A grease, and install them over the dowels.

NOTE

During preparation of the crankcase, heat the cam or cam and second order balanceweight assembly as applicable, for five minutes in an oil bath at 121°C (250° F).

c. Establish the crankcase main section front bearing ring gap clearance by placing the two rings in the front crankcase section. See figure 7-25. Compare with the value in reference 200 of the Table of Limits, Section IX. Check the side clearance,

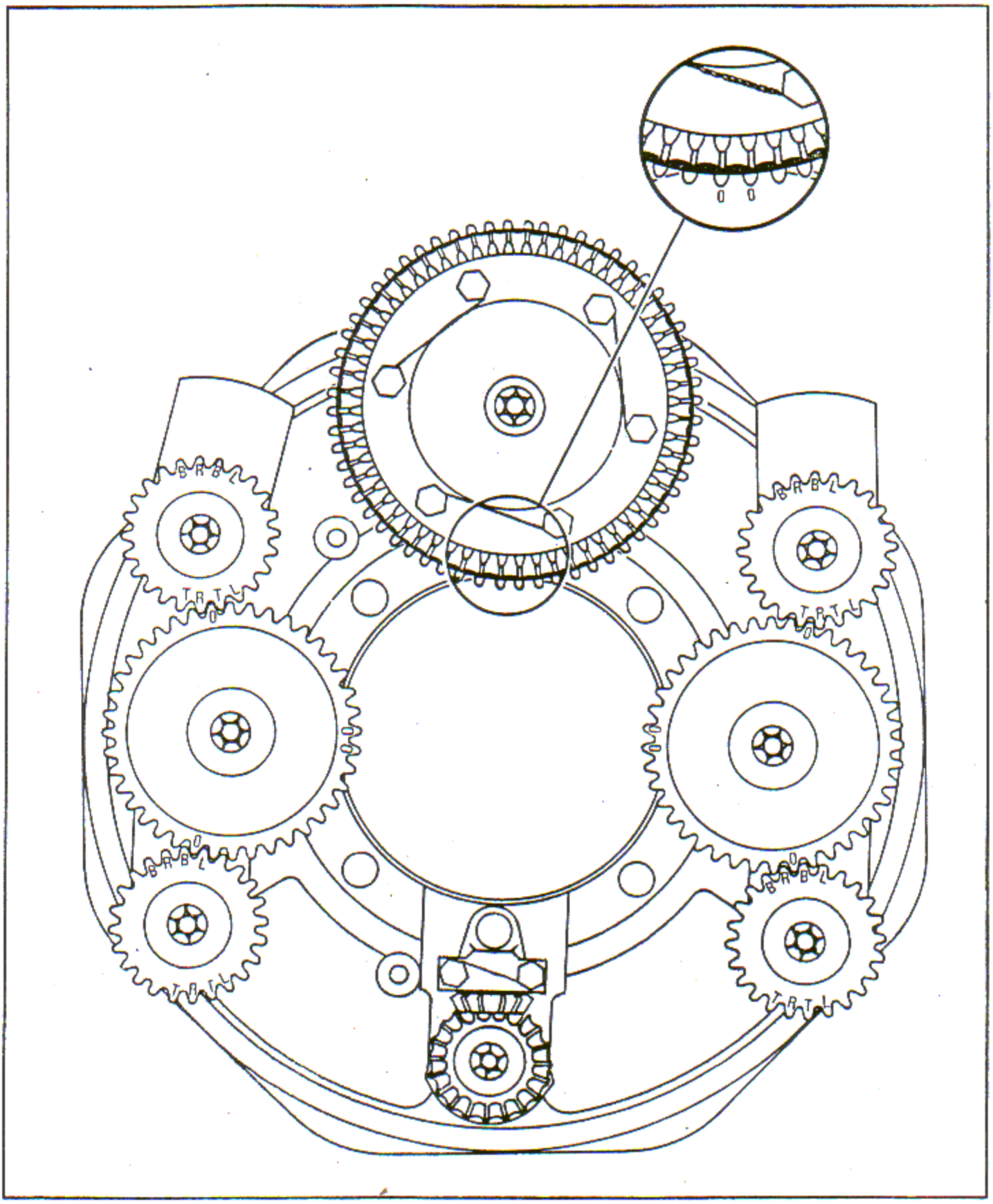

Figure 7-23. Cam and Second Order Balanceweight Mechanism Correctly Timed (R1820-80 Series)

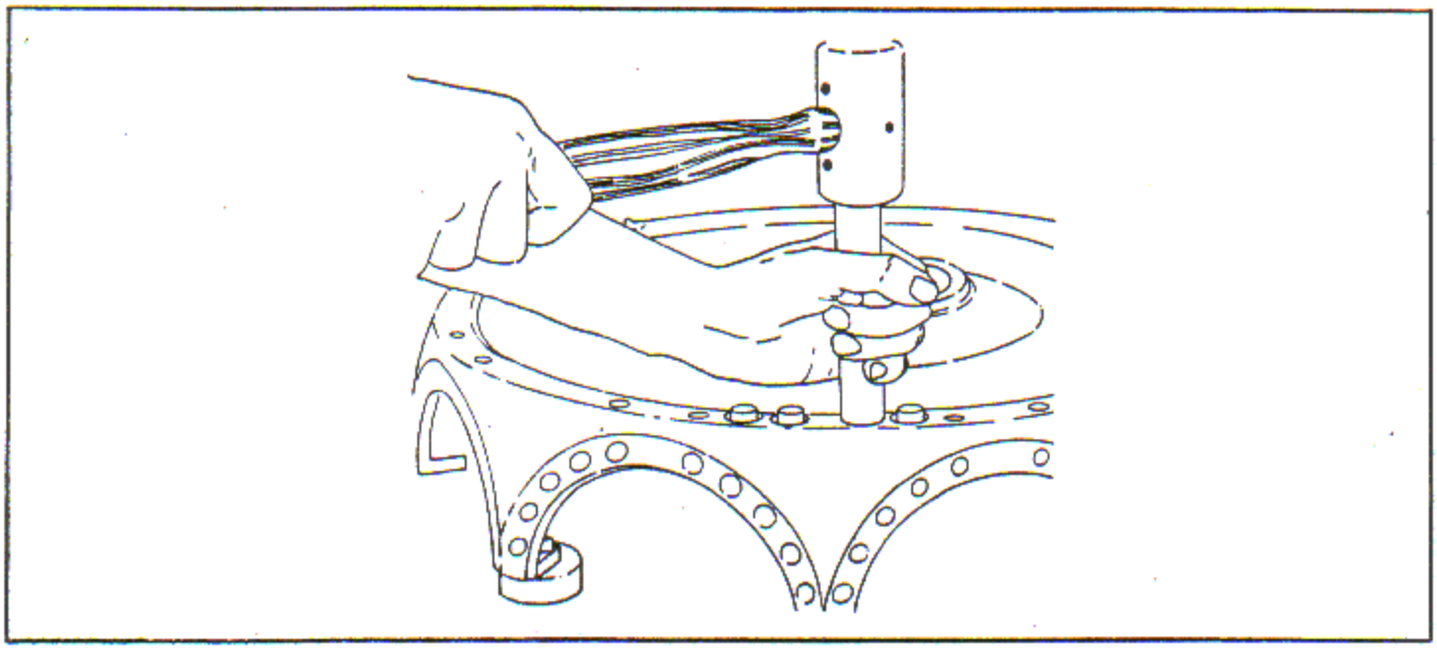

Figure 7-24. Installing Crankcase Main Section Dowels

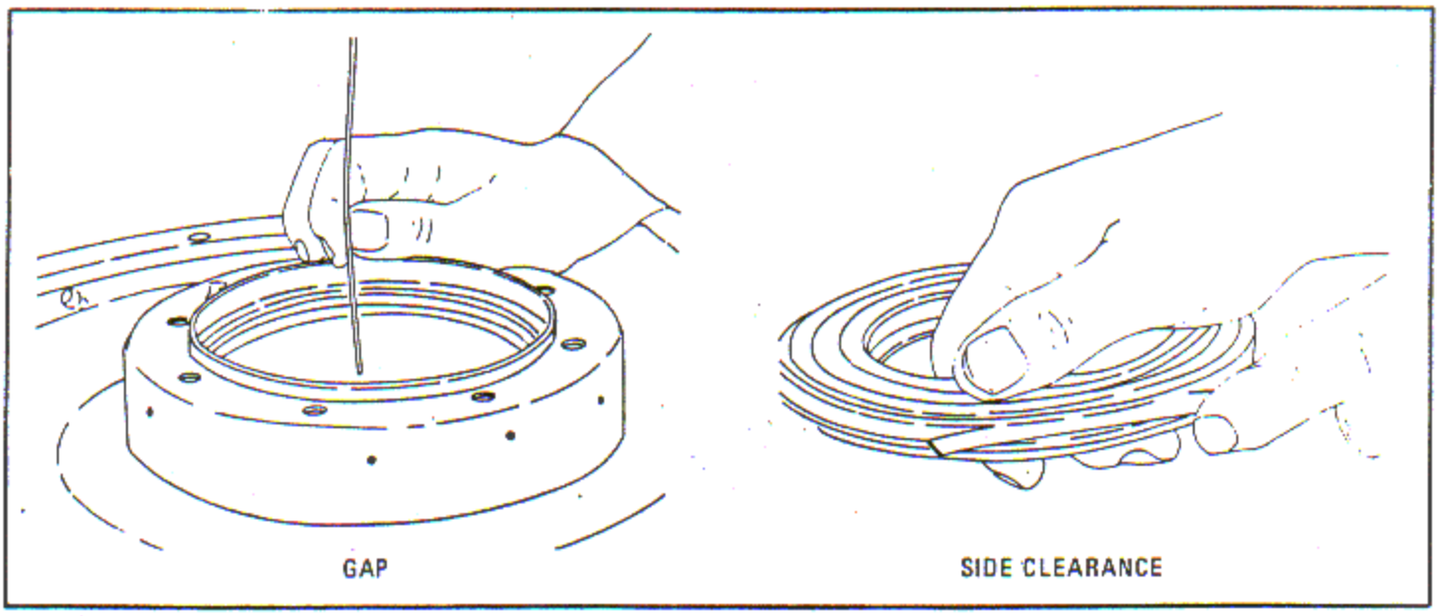

Figure 7-25. Checking the Gap and the Side Clearance of Reduction Drive Gear Spacer Oil Seal Rings

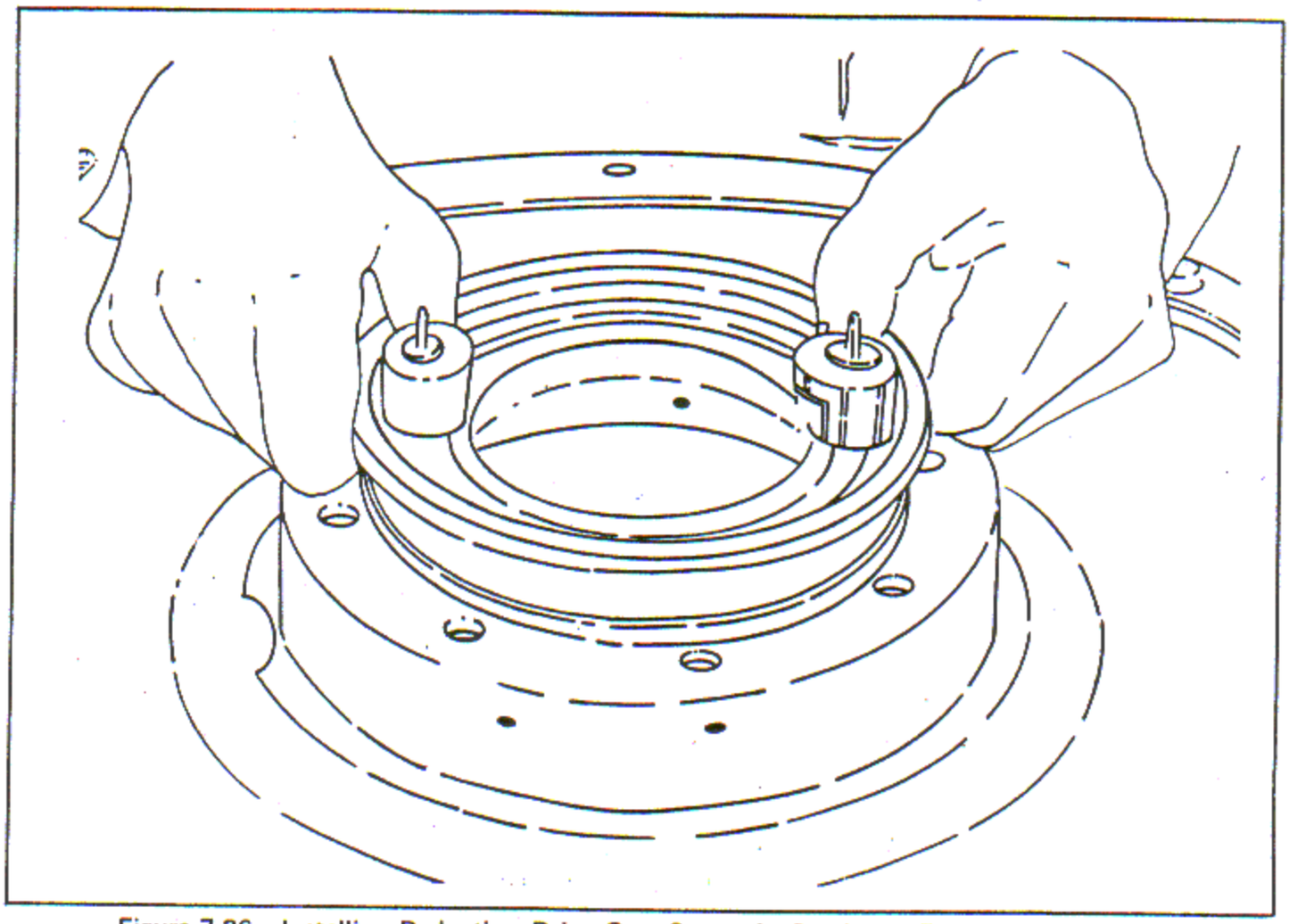

Figure 7-26. Installing Reduction Drive Gear Spacer in Crankcase Front Main Section

figure 7-25, by assembling the rings into the front bearing spacer and compare with the value in reference 201, Table of Limits, Section IX.

d. Install one holding tool in each of two diametrically opposite puller holes in the spacer. Locate the spacer in the crankcase front main section and use installing tool to compress the rings. See figure 7-26. Remove the installing tool but keep the holding tools in place until final assembly.

e. Install one aligning bar in each of two attaching screw holes, 180 degrees apart, as shown in figure 7-27, in the cam assembly mounting boss in the crankcase front main section.

f. Apply anti-seize compound, Federal Specification TT-A-580a, to the cam assembly mounting boss.

g. Locally fabricate a 2.00 x 0.310 inch steel locating pin. Install the heated cam assembly (step b.) over the aligning bars in the crankcase front main section. Using the locating pin, align the hole in the support with the hole in the crankcase. The centers of the holes must be within 0.0015 inch of each other. Remove the pin.

CAUTION

Keep the cam or cam and balanceweight assembly as applicable, in the correct timing position until final assembly.

h. Install four cam support to crankcase attaching washers and screws. Remove the aligning bars after the assembly has cooled, and install the remaining washers and screws. Ensure that the screw located under the cam intermediate drive gear is properly installed. Tighten and torque the screws to 300 - 325 inch-pounds. Lockwire in pairs.

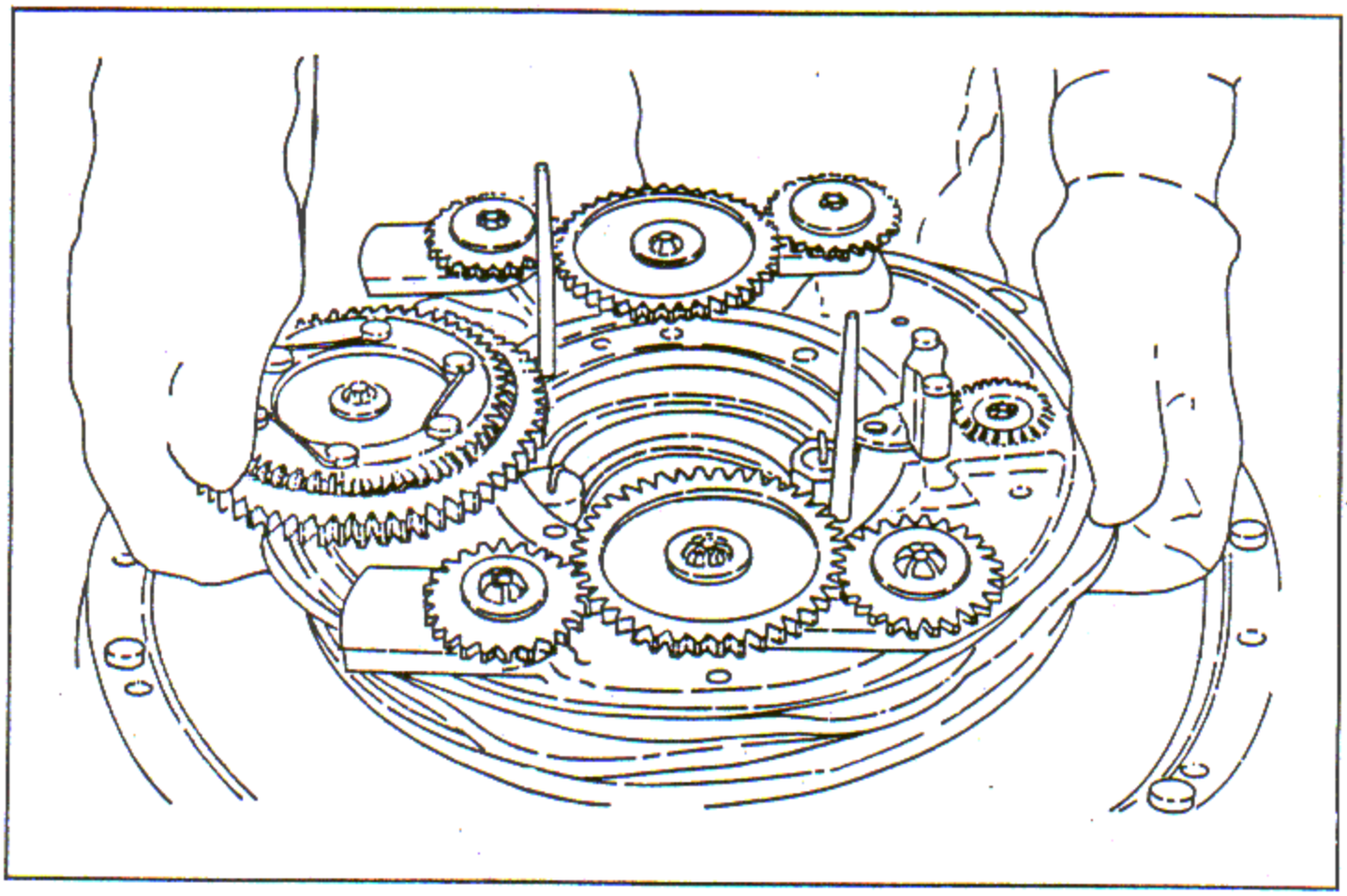

Figure 7-27. Installing Cam and Second Order Balanceweight Assembly (R1820-80 Series)

7-27. CYLINDER AND VALVE ASSEMBLY. (See tool group 36A.)

a. Place the cylinder on its side on a work bench. Lubricate the intake valve stem with clean engine oil. Insert the valve in its proper guide in the cylinder and secure it by using holder on the valve stem.

NOTE

Cylinders in which the exhaust valve guide was not replaced during current overhaul must be equipped with new exhaust valves. If the exhaust valve guide was replaced at current overhaul either a new or used valve may be installed.

b. Select an exhaust valve from the following chart, observing the exhaust valve and valve guide clearance as specified in reference 249, Table of Limits, Section IX.

Guide Bore Diameter	Exhaust Valve Stem Diameter
0.7485 - 0.7495	0.7420 - 0.7440
0.7495 - 0.7505	0.7430 - 0.7450
0.7505 - 0.7515	0.7440 - 0.7460
0.7515 - 0.7535	0.7455 - 0.7460

c. Lubricate the exhaust valve stem with clean engine oil. Insert valve in its proper guide in the cylinder and secure with holder.

NOTE

For engines not equipped with spun-on type exhaust guides, install the valve guide retaining spacer, guide lock and spacer retainer before proceeding.

d. Place the cylinder on bench stand. Remove the exhaust valve holder and install the inner and

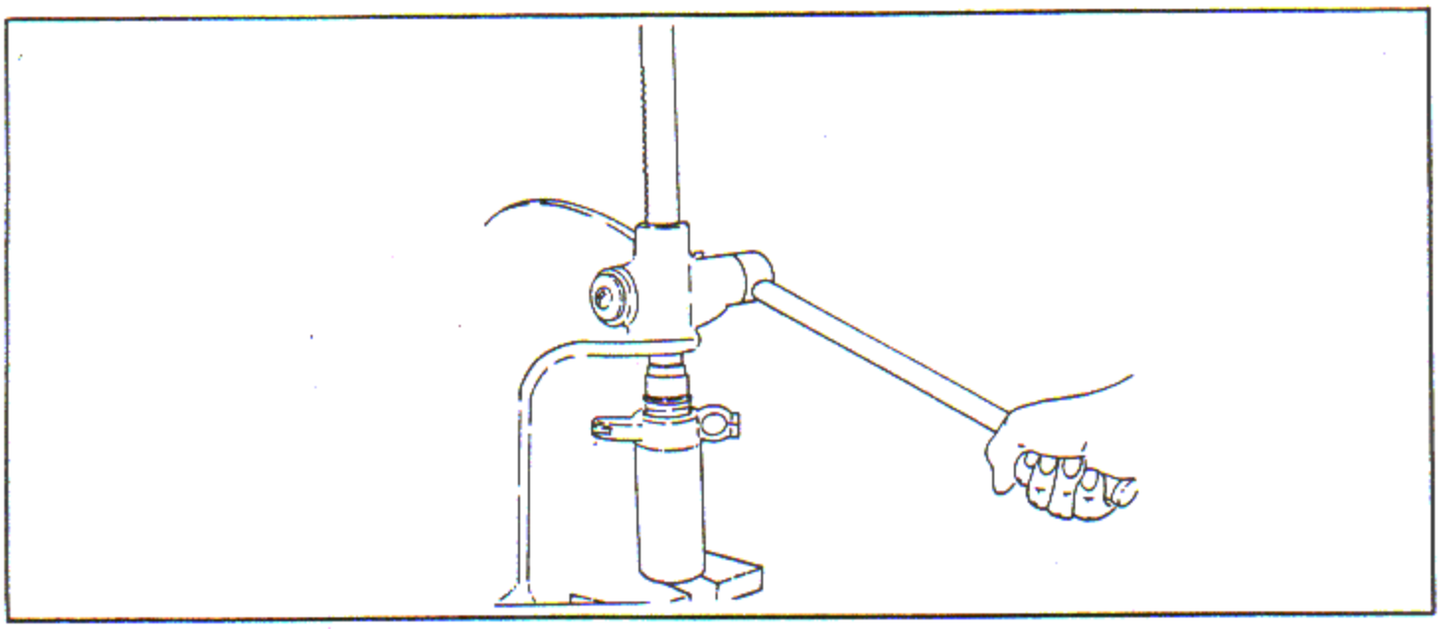

Figure 7-28. Installing Rocker Arm Bearing

outer exhaust valve springs over the valve stem. Install the upper valve spring washer on the springs.

e. Compress the valve springs using compressor, and install the split valve spring lock washers, tapered end down, around the groove in the valve stem. Remove the compressor.

f. Install the intake valve springs, washer and valve spring lock in the same manner.

g. Install protective cover in the intake port of cylinder. Install protective cover in the exhaust port of the cylinder. Install plug in spark plug holes.

h. If previously removed, install the thermocouple adapter using wrench. Torque to 20 - 50 inch-pounds.

NOTE

Ensure that the thermocouple adapter shoulder is flush against the cylinder.

7-28. ROCKER ARM ASSEMBLY. (See tool group 117.)

a. Heat the rocker arm in oil to 121°C (250°F).

b. Locate the rocker arm bearing in position on the arm and press in place with adapter and plug and collar. See figure 7-28.

c. Install the valve clearance adjusting screw and the lock screw at the split end of the rocker arm.

7-29. PISTONS AND PISTON RINGS ASSEMBLY. (See tool group 98.)

7-29A. Piston ring grooves are numbered from the top (dome) down. Wedge shaped piston rings are used in grooves No. 1 and 2. Rectangular rings are used in grooves No. 3, 4 and 5.

7-30. PISTON RING SIDE CLEARANCE. The piston and ring design is such that wedge type (tapered) rings cannot touch the bottom of the groove, but always bottom on their tapered sides. There is no side clearance at the time of fitting. After the piston is installed in the cylinder, the ring expands and side clearance is created.

a. Fit the No. 1 piston ring according to reference 242, Table of Limits, Section IX.

b. Fit the No. 2 piston ring according to reference 243, Table of Limits, Section IX.

NOTE

No. 2 and 3 lands are of the same diameter.

c. Take the side clearance measurements at the approximate center of the thrust and anti-thrust sides (under the valve pockets) of the piston. Use tapered piston ring side fit checking fixture and comparator. See figure 7-29.

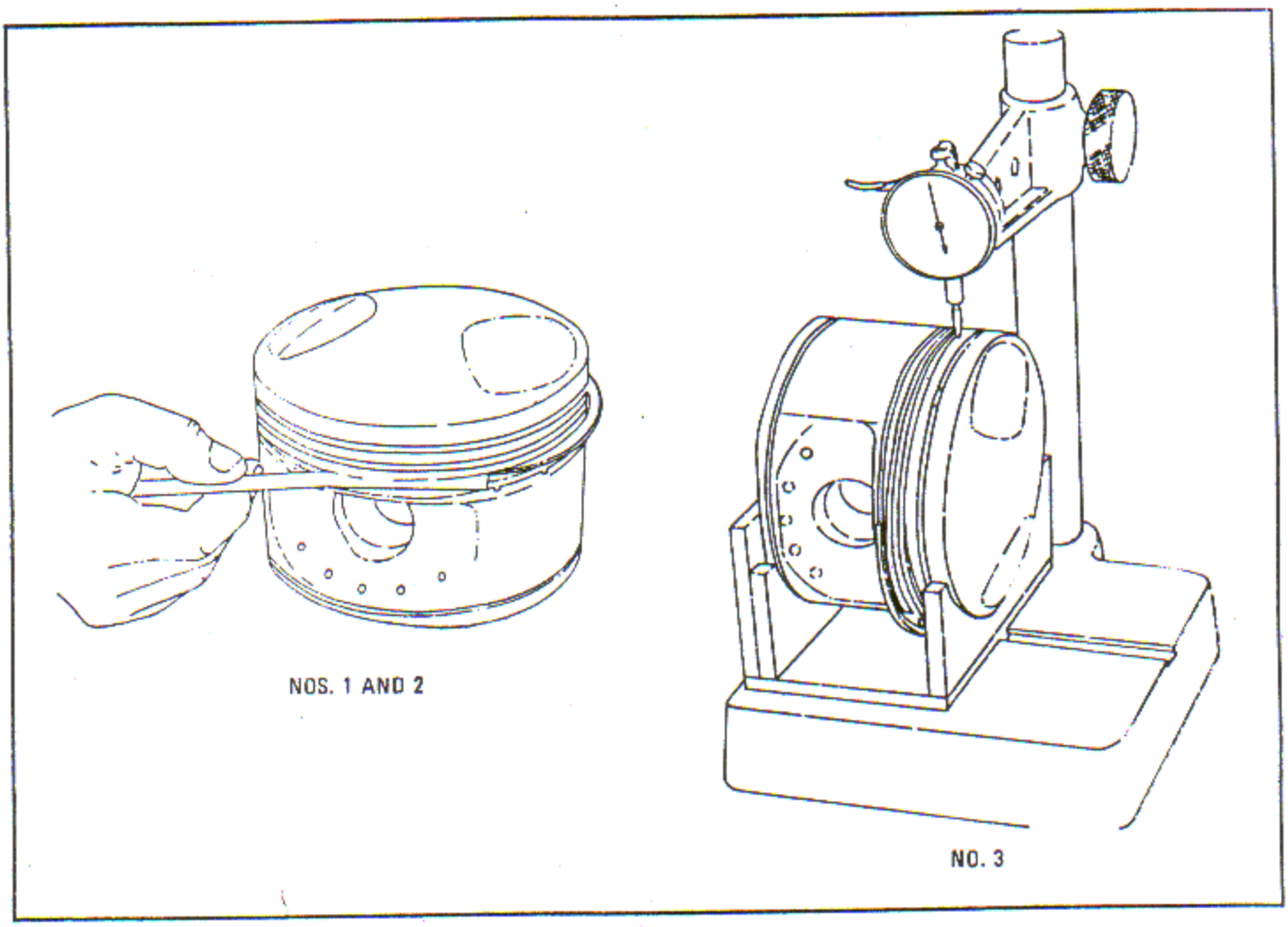

Figure 7-29. Checking Piston Ring Side Clearance at Nos. 1, 2 and 3 Ring Grooves

d. Check the side clearance in the first two grooves against the values in references 242 and 243 in Table of Limits, Section IX.

e. Select rings for grooves 3, 4 and 5 which when seated in the grooves, have the side clearance specified in references 244, 245 and 246 of the Table of Limits, Section IX. Check at four equally spaced points, for all rings, by inserting a feeler gage between the ring and the side of the groove. See figure 7-29.

7-31. PISTON RING INSTALLATION.

a. Using installing tool, assemble the piston rings with TOP up, on pistons No. 4, 5, 6 and 7. Prior to installing dip the piston pins and rings in engine oil.

b. Assemble the piston rings on pistons No. 1, 2, 3, 8 and 9. The first four rings are to be installed with TOP up and the fifth ring with TOP down (facing in towards the crankshaft).

7-32. PISTON PIN AND PLUG ASSEMBLY.

There is no positive retention of the piston pin until the piston has been installed in cylinder, at which time the piston pin plug will bear against the cylinder wall and hold the piston pin in place.

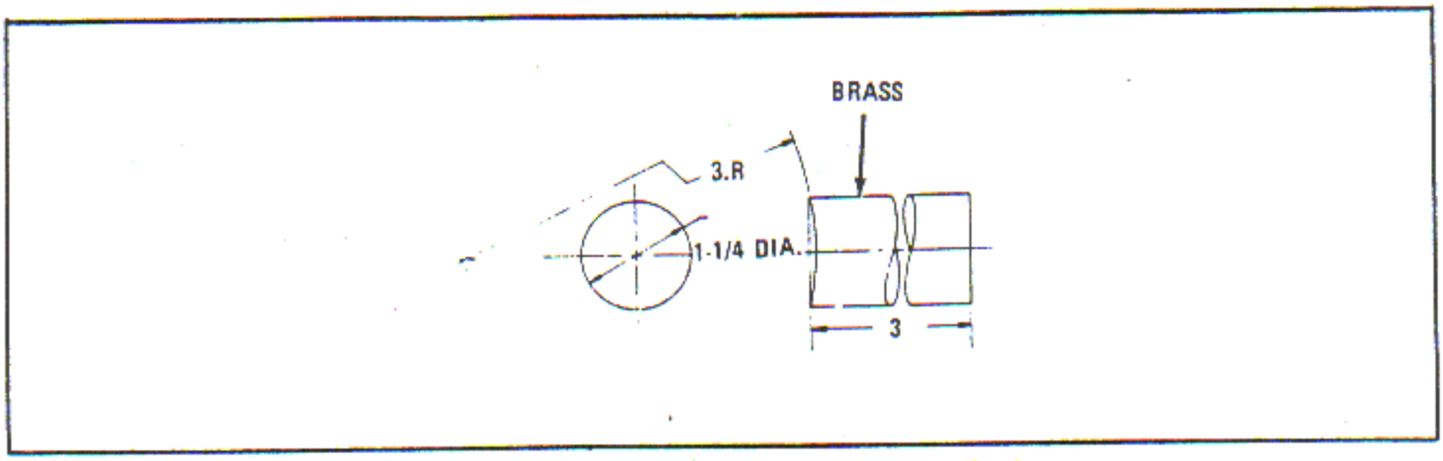

Figure 7-30. Piston Pin Plug Installing Tool

CAUTION

Piston must be installed so that the piston pin plug faces the front of the engine.

NOTE

Pistons at locations 4, 5, 6 and 7 are to be reversed at assembly. The piston pin plug, after installation, will face the rear of the engine (R1820-76C, -76D and -80B engines only).

a. Lubricate the pilot diameter of the piston pin plug with engine oil. Press the plug into the piston pin using a locally fabricated brass installing tool. See figure 7-30. The installing tool is applied between the plug cap and the arbor press arm.

CAUTION

Exercise care to exert only sufficient pressure to bottom the shoulder of the plug against the end of the piston pin.

b. Lubricate the piston pin, and install in piston pin boss.

c. Ensure the fit between the piston pin and piston pin plug is 0.001 - 0.003 inch tight. The following chart may be used as a guide in assembling these parts when new copper plated plugs are installed in pins containing oversize inside diameters.

Piston Pin ID	Piston Pin Plug OD
0.990 - 0.989	0.992 - 0.991
0.991 - 0.990	0.993 - 0.992
0.992 - 0.991	0.994 - 0.993

CAUTION

If piston pin ID contains a slight taper, the larger diameter shall be used in selecting the correct size plug.

7-33. VALVE TAPPET AND GUIDE ASSEMBLY. (See tool group 141.)

NOTE

Valve tappet rollers (PN 149416) shall be installed whenever possible.

a. Lubricate the valve tappet roller bushings, rollers and pins with clean engine lubricating oil. Install bushing into roller and insert roller and bushing into fork on tappet.

b. Insert pin through fork, bushing and roller.

c. Place proper gasket on valve tappet guide and install valve tappet assembly into guide.

d. Install holding clip into valve tappet to ensure the roller bushings, rollers and pins will not fall into the engine during final assembly.

7-34. SUPERCHARGER REAR HOUSING ASSEMBLY.

a. Install the supercharger rear housing, rear face down, on a work bench designed with holes to accommodate the rear face studs and with a mounting provision for the impeller shaft locking tool. See figure 2-7.

b. R1820-76 Series, -86A and -86B models. If the retaining screw boss threads were serviceable, reinstall the removed retainer screw, omitting the lock washer. Torque the screw to 22 - 25 inch-pounds and lockwire the screw.

NOTE

If the boss threads were unserviceable and required reworking for better retention, proceed as in step b for R1820-80 models.

c. R1820-80 Series models. Apply sealing compound, Specification MIL-S-22473, to the threads of the supercharger housing and screw. Omit the washer and install the screw torquing to 50 - 70 inch-pounds. Lockwire the screw.

7-35. DIFFUSER PLATE INSTALLATION. (See tool group 37.)

NOTE

A pinch fit between the diffuser vanes and the shroud plate must be established when a new diffuser plate, shroud plate, or supercharger front housing and/or impeller shroud plate parting surfaces have been machined.

a. Place the diffuser plate in position on the supercharger rear housing with a shim installed between the two parts. Install the attaching nuts with washers and tighten using wrench. Do not cotter pin.

b. Place the supercharger front housing, front end down, on a work bench. Install the supercharger rear housing in position without a gasket between the parting surfaces. Ensure the diffuser vanes are contacting the supercharger front housing. Measure the clearance between the surfaces of the supercharger front and rear housings, using two sets of feeler gages on diametrically opposite sides of the housings. See figure 7-31.

c. Measure the thickness of the gasket to be used, using a suitable micrometer. Subtract 0.001 inch from this measurement to allow for compressibility of the gasket. Subtract this figure from the measured clearance between the supercharger front and rear housings parting surfaces. This figure is the pinch fit that will result when the housing is finally assembled. Compare against the value in Reference 462, Table of Limits, Section IX.

d. If the pinch is not within the specified limits, remove the supercharger rear housing and add or subtract shims under the diffuser plate to obtain the proper pinch fit. Repeat the foregoing operations to establish pinch fit.

NOTE

If the diffuser vanes are reconditioned to the extent that more than two shims are required, replace the diffuser to preclude possible air flow restrictions. If reconditioning of either the diffuser or the supercharger rear housing parting surfaces requires the installation of several shims, a maximum of four shims may be used.

e. Install the required shims, the diffuser plate and the attaching nuts and washers. Torque the attaching nuts to 70 - 95 inch-pounds. See figure 7-32. Install cotter pins in holes provided.

7-36. IMPELLER SIDE CLEARANCE. (See tool group 130.)

NOTE

The impeller and inducer are a matched assembly with serial numbers stamped on the parting surfaces to prevent interchanging parts. Mismated parts must be balanced as an assembly.

a. Install the plate of arbor in and flush with the top surface of a work bench. See figure 7-33. Drill a hole through the bench large enough for

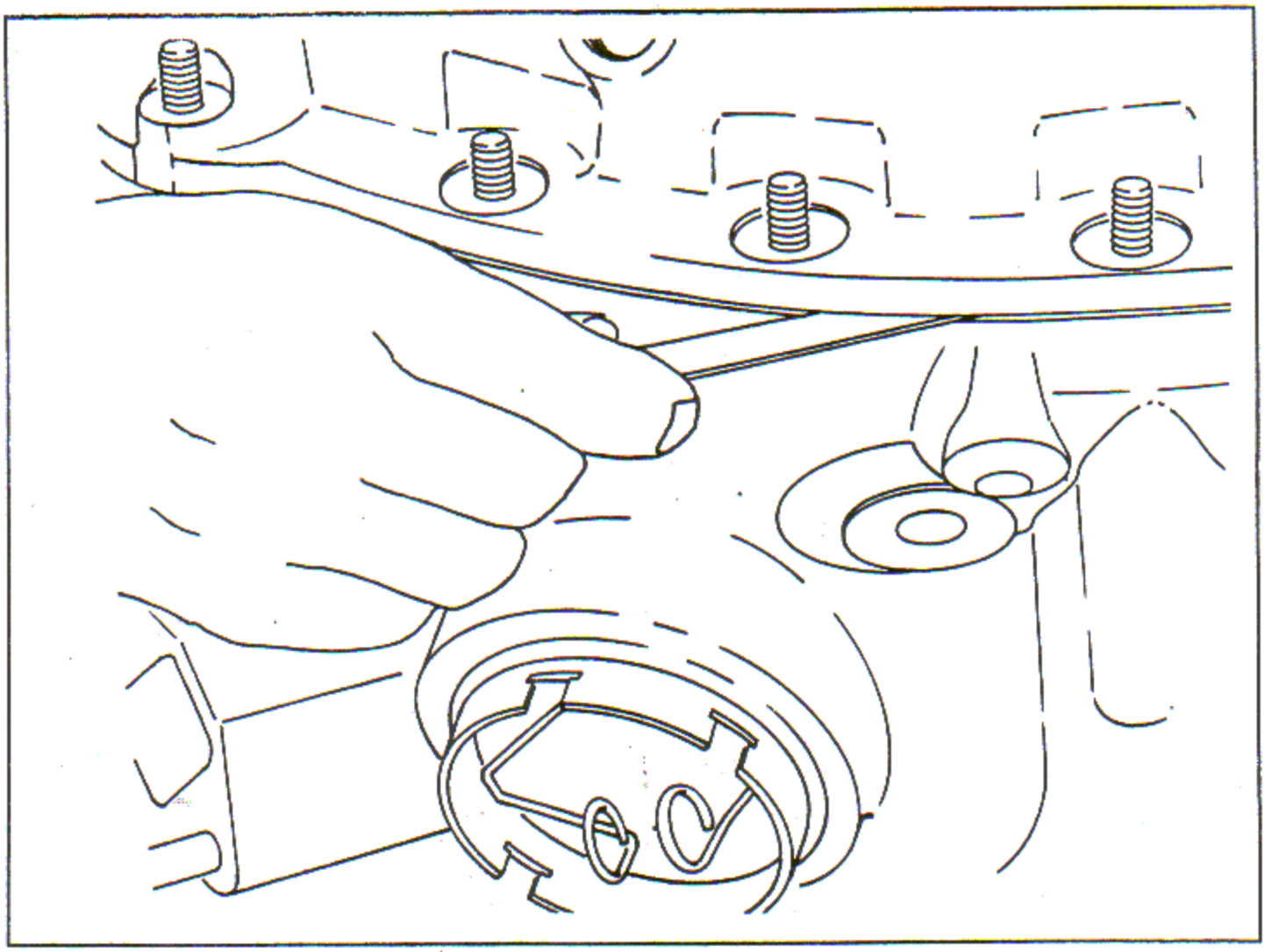

Figure 7-31. Measuring Distance Between Supercharger Front and Rear Housings

the end of the arbor to enter freely. Place the supercharger front housing on the bench with the impeller oil seal sleeve in approximate alignment with the hole in the work bench.

b. Install collar E on the arbor with the large diameter contacting the arbor flange. Insert the arbor through the supercharger front housing, engaging the flattened end of the arbor in the plate slot.

c. Install the splined impeller washer and the impeller and inducer over collar E. Place the second splined impeller washer on the rear of the impeller, and install collar F so that the step on the collar centers the splined impeller washer. Install the arbor washer and lock the entire assembly with the nut.

d. Install the supercharger rear housing and diffuser plate assembly on the supercharger front housing so that the diffuser vanes are contacting the front supercharger diaphragm. This will result in clearance between the front and rear supercharger parting flanges.

e. Using a dial indicator, measure the total end movement of the impeller by raising the arbor until the impeller contacts the diffuser plate. Enter this movement on the inspection report under item G. Refer to figure 7-33A for a sample inspection report.

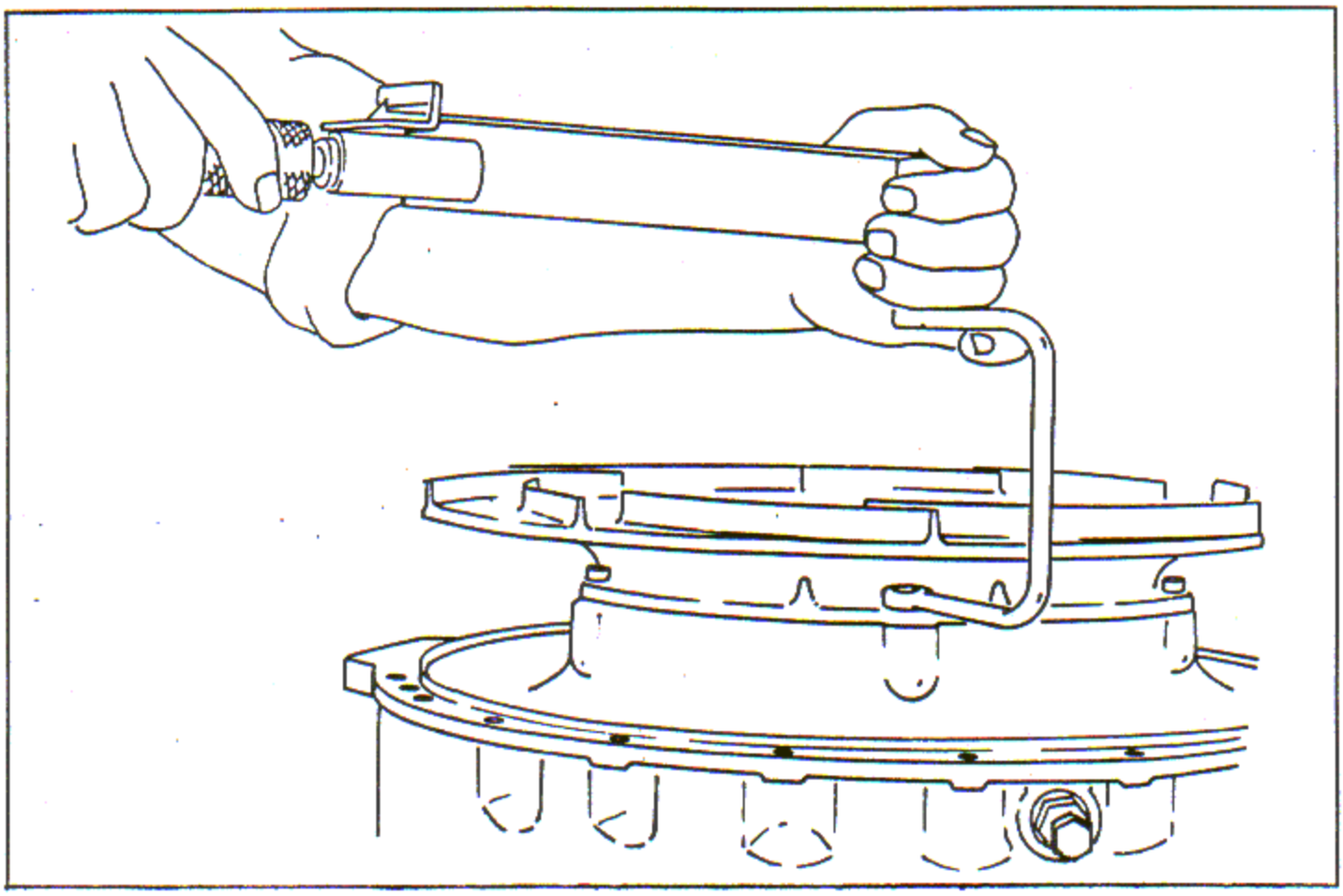

Figure 7-32. Torquing Diffuser Plate Nuts

7-37. IMPELLER TO DIFFUSER PLATE FORWARD CLEARANCE.

a. Remove the nut (1, figure 7-33) and arbor washer (2), and install the impeller shaft gear washer with chamfered side up. Place the arbor washer, step side down, on arbor (6) and lock the entire assembly securely with the hexagon nut.

b. Using a dial indicator, measure the clearance between the impeller and diffuser plate by raising the arbor until the impeller contacts the diffuser plate. Enter this clearance under item H in the inspection report (figure 7-33A). Subtract item H from item G. The result is the side clearance between the front face of the impeller and the rear face of the supercharger front housing diaphragm or oil seal sleeve with the impeller in full forward position. This clearance is item I on the inspection report. Compare the figure obtained with reference 409, Table of Limits, Section IX.

c. Select an impeller shaft end clearance figure within the limits given in the Table of Limits. Enter this figure in the inspection report, item J. Subtract item J from item H. The result is item K which is the clearance between the impeller and the diffuser plate with the impeller in full rearward position. Compare this with Reference 410, Table of Limits, Section IX.

NOTE

Used spoked washers, P/N 145206, which superseded impeller shaft gear washer, P/N 62864, may be re-used after inspecting for flatness of mating surfaces to be within 0.0015 inch FIR, a minimum spoke thickness of 0.115 inch, and no scoring of any spoke deeper than 0.003 inch. No bent spokes are permitted. Impeller shaft gear washer P/N 62864 may also be re-used if the flatness of its mating surfaces does not exceed 0.002 inch.

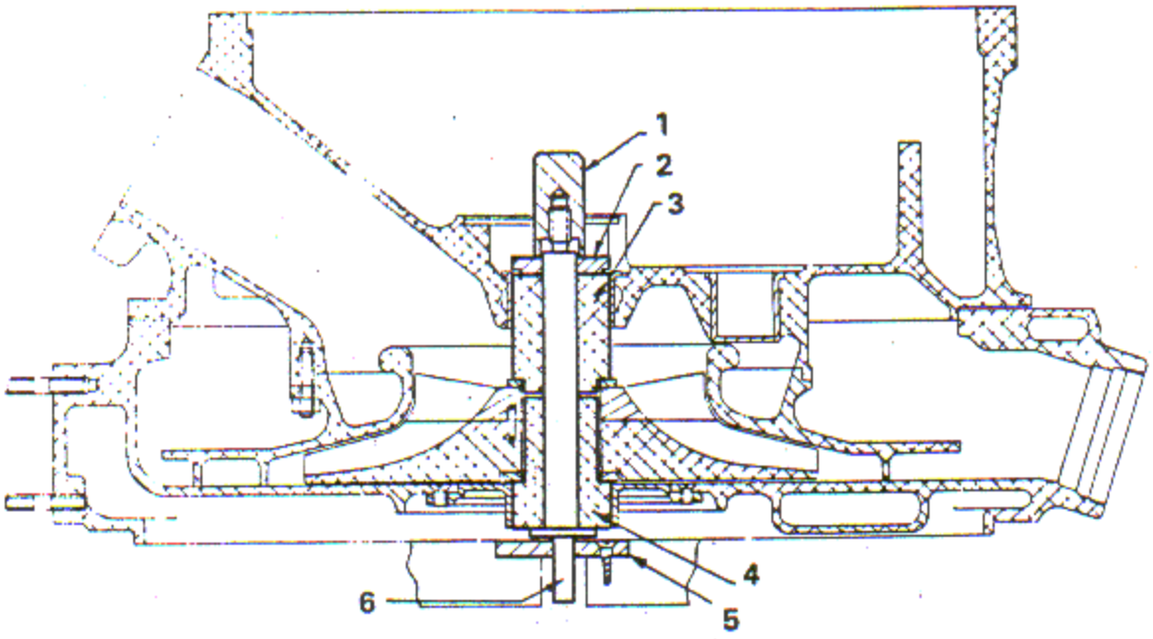

VIEW A

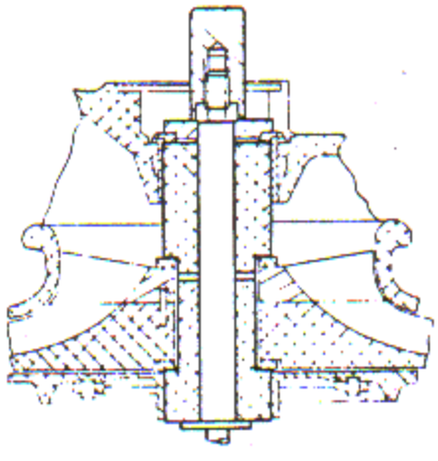

VIEW B

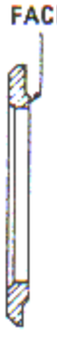

1. NUT
2. ARBOR WASHER
3. COLLAR F
4. COLLAR E
5. ARBOR PLATE
6. ARBOR

Figure 7-33. Measuring Impeller Clearance

ITEM	LOCATION	DIMENSION
G	IMPELLER SIDE CLEARANCE IN SUPERCHARGER HOUSINGS	
	TOTAL	.XXX
H	IMPELLER TO DIFFUSER PLATE FORWARD CLEARANCE	-.XXX
I	IMPELLER TO SUPERCHARGER FRONT HOUSING	.XXX
H	IMPELLER TO DIFFUSER PLATE FORWARD CLEARANCE	.XXX
J	IMPELLER SHAFT END CLEARANCE	-.XXX
K	IMPELLER TO DIFFUSER PLATE REAR CLEARANCE	.XXX
	INSPECTOR	.XXX

Figure 7-33A. Impeller Clearance Inspection Report

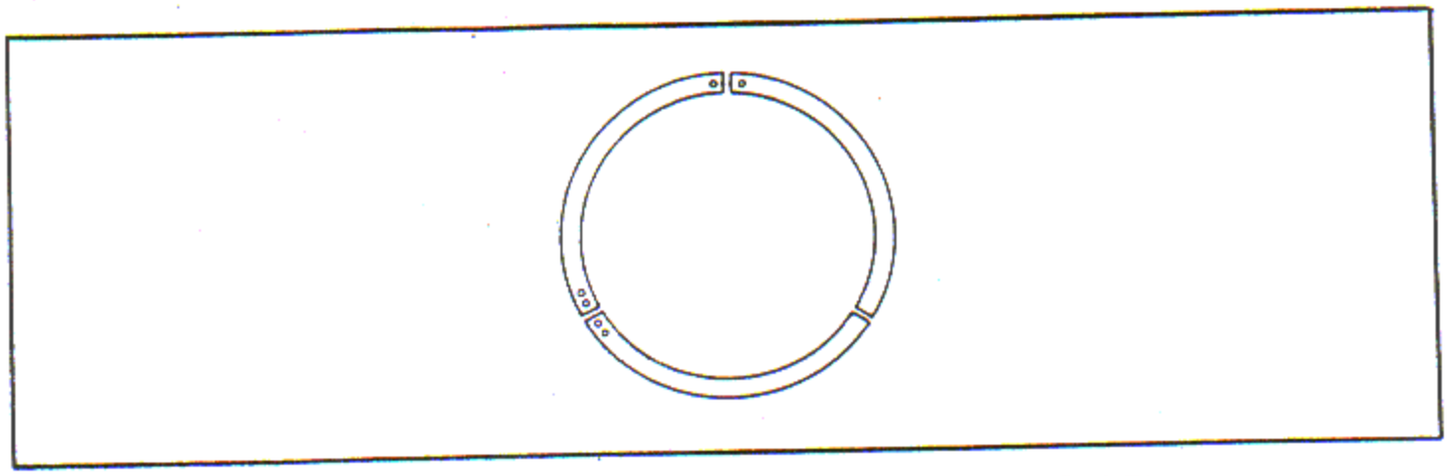

Figure 7-34. Impeller Shaft Tri-Segmented Carbon Oil Seal Ring

d. If the clearance between the diffuser plate and the impeller is insufficient, replace the impeller shaft gear washer with one that is thick enough to give the correct clearance. If an impeller shaft gear washer of desired thickness is not available, face off an oversize washer on the shouldered side. See figure 7-38. If the clearance between the diffuser plate and the impeller is too great, the washer should be faced off to bring the clearance within the specified limits. Thickness of the faced washer must be held uniform within 0.002 inch.

7-38. ASSEMBLE IMPELLER SHAFT SEGMENTED OIL SEAL RINGS.

NOTE

Due to the inherent property of carbon to chip, exercise care in handling and assembly of the parts.

a. Install a plug or sleeve in the supercharger front and rear housing bores to hold the rings square to the axis of the bores when checking the gap.

b. The total end gap of the carbon rings, when installed in their respective bores in the supercharger front and rear housings shall be 0.006 - 0.012 inch.

NOTE

The rings are identified at the mating ends with one drill point, two drill points or no marking. Install the rings with the identification marks facing the propeller end of both grooves on the front sleeve and to the anti-propeller end of both grooves on the rear sleeve, mating the segment ends adjacent: one to one, two to two, or no marking to no marking. Refer to figure 7-34.

NOTE

For the purpose of checking end gap a dummy sleeve may be used in place of the bores in the supercharger front and rear housings. I.D. of dummy sleeve is 2.202 - 2.203 inches and is to be calibrated in accordance with standard shop practice.

c. The ring segments shall be installed in the bores on the plug or sleeve held against the bore surface with ends butted and the remaining one gap checked with feeler stock.

d. The end of a segment can be hand reworked, if necessary, to obtain the 0.006 - 0.012 inch gap.

e. The side face clearance between the rings and groove shall be 0.002 - 0.006 inch. Check using feeler stock.

NOTE

Do not perform any rework on the side faces of carbon rings. These faces have been lapped to a light hand finish.

f. After fitting of the carbon ring, use Lubriplate or equivalent to position and hold rings in the sleeve during assembly.

7-39. ASSEMBLE IMPELLER SHAFT AND IMPELLER IN REAR SUPERCHARGER HOUSING. (See tool groups 68, 130 and 134.)

a. Place the supercharger rear housing, front end down, in stand. Install the bronze thrust washer over the impeller shaft splines so that the chamfered side of the washer is against the gear.

NOTE

Inspect all impeller shaft rear oil seal sleeves, P/N 149575, for correct length of 2.491 - 2.493 inches. Scrap rear sleeve which are not of correct length or part number.

b. Install the impeller shaft rear oil seal sleeve and rings so that the rings are nearest the gear. Place the impeller shaft in position in the supercharger rear housing, taking care not to damage the oil seal rings. Invert the rear housing so that the diffuser is facing up, being careful that the shaft does not fall out of the rear housing. Place the entire rear housing over the impeller shaft locking tool, figure 2-7, and engage the impeller gear in the splines of the locking tool. Coat the splines on the impeller shaft with engine lubricating oil and install the impeller shaft rear spacer.

NOTE

The inducer and the impeller are a matched assembly, and have two alignment pins that align the parts correctly in relation to the spline location of the two parts. It is essential that the two alignment pins be engaged in the inducer when the impeller is installed on the impeller shaft.

c. Tie the inducer and impeller together with heavy cord before heating. Place the cord over five impeller vanes, drawing it down between the vanes and across the front face of the impeller, and looping it over four vanes on the opposite side. See figure 7-35. Draw the cord tight and tie. The cord must pass across the vanes of the impeller and not across the rear face of the hub to preclude interference with the installation.

d. Heat the assembly using standard shop practice to 149°C (300° F) for 15 minutes. Install the inducer and impeller as one complete unit on the impeller shaft. Cut the cord and remove as one piece from around the impeller and inducer.

e. Immediately install the impeller shaft front splined steel washer, the front oil seal sleeve and ring assembly, the impeller shaft nut lock and the impeller nut on the impeller shaft. Snug the nut down so that the inducer is fully seated against the rear oil seal sleeve. Allow the impeller to return to room temperature.

f. Place wrench piloting support over the impeller and secure the support on the front parting surface of the supercharger housing. Install impeller shaft front nut lug wrench on the nut and tighten the impeller nut to the value specified in reference 922, Table of Limits, Section IX, using torque wrench. See figure 7-36. Remove the wrench support. Insert cardboard strips between the diffuser plate and the impeller vanes around the outer circumference of the impeller.

g. Bend the tab on the impeller nut lock so that it securely locks the nut. Ensure the tab is bent into the slot in the nut so that the tab is within the outside diameter of the nut at this location.

h. Remove the cardboard strips from between the diffuser and impeller. Remove the supercharger rear housing from the impeller shaft locking tool. Invert the rear housing so that the impeller is facing down.

NOTE

Wear on the conical bearing surface of the impeller shaft thrust ring is acceptable if the radius of the bearing surface is at least 0.010 inch greater than the radius of the non-bearing conical surface.

i. Place the impeller shaft thrust ring on the rear end of the impeller shaft. Install the laminated steel shim and the impeller shaft retainer in the rear housing. Tighten the five flat head screws to secure the retainer. Check the impeller shaft end movement using a feeler gage between the flat side of the

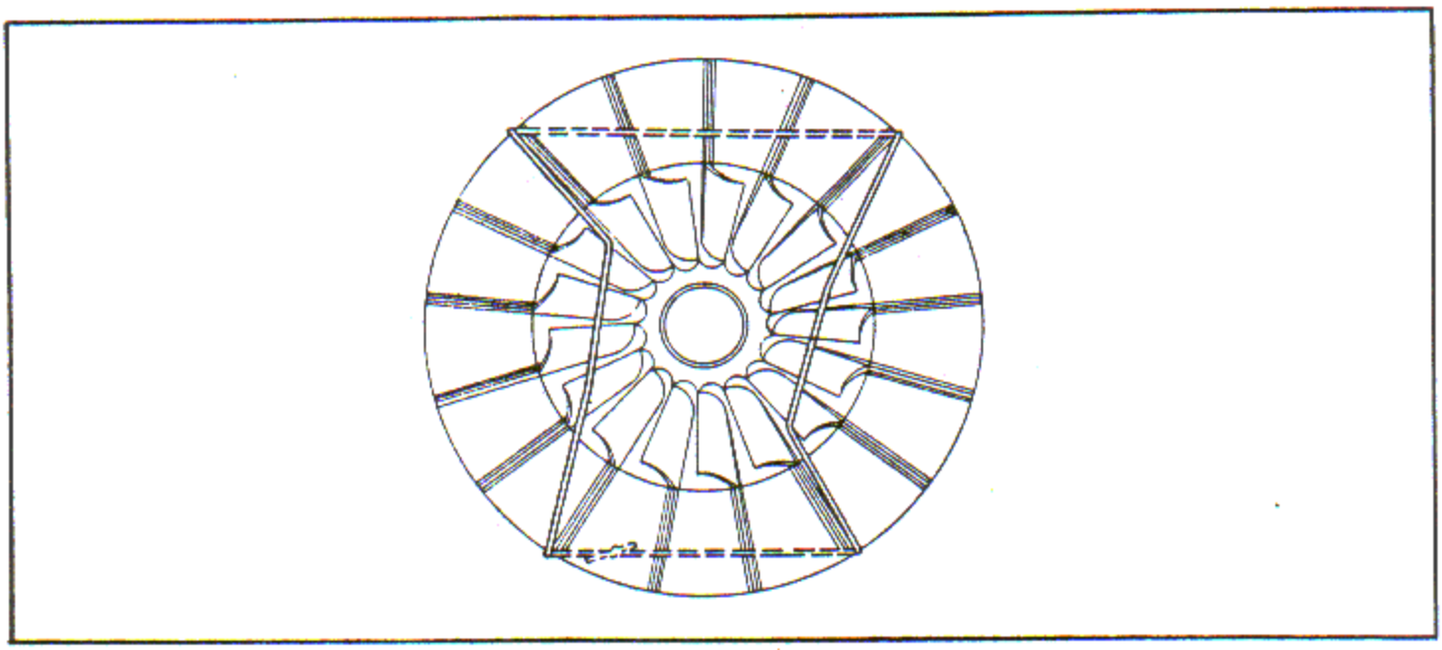

Figure 7-35. Impeller and Inducer Tied Together

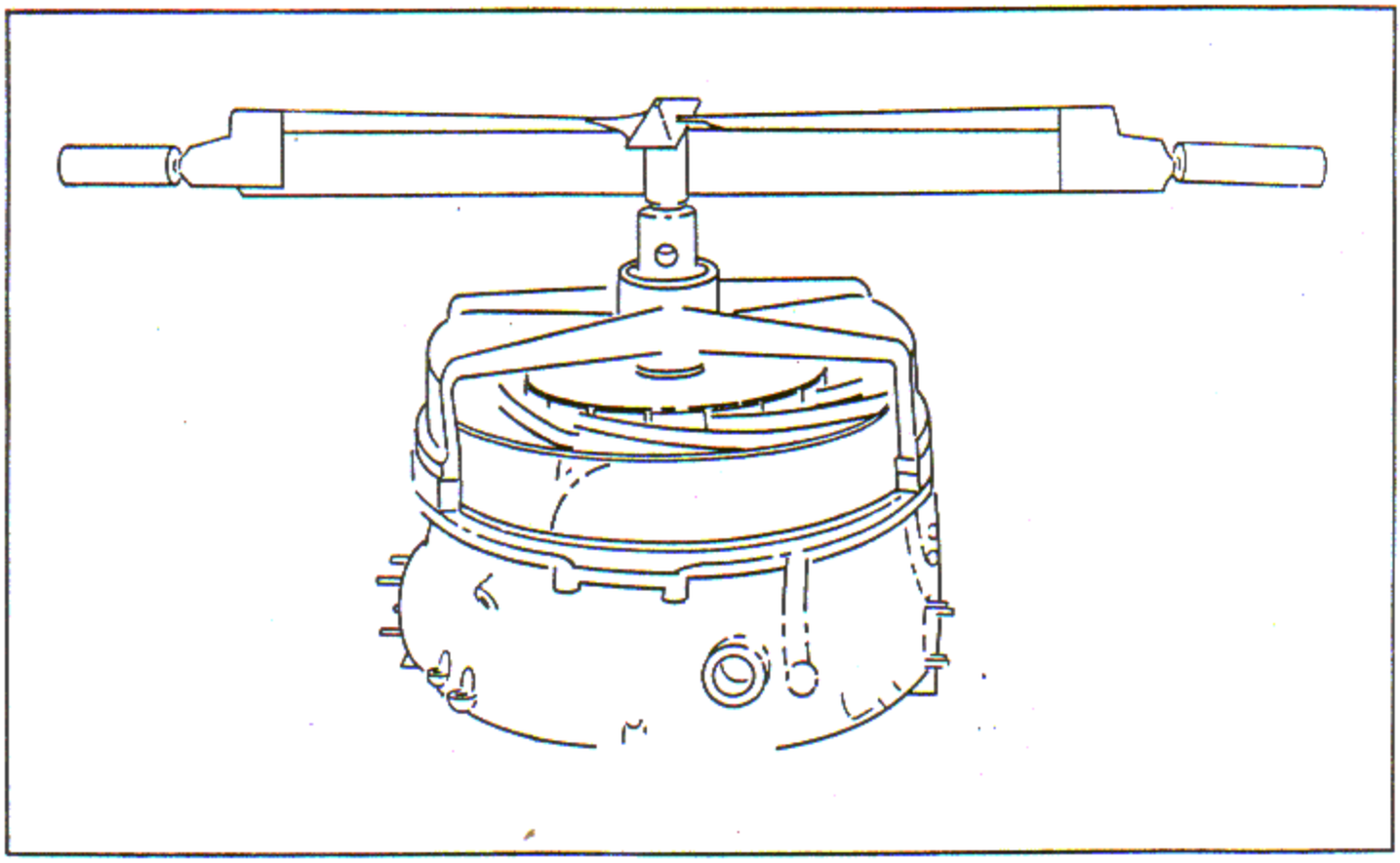

Figure 7-36. Torquing Impeller Shaft Nut

thrust ring and the rear end of the impeller shaft. The impeller shaft end clearance should correspond with item J on the inspection report. Refer to figure 7-33.

j. If the impeller shaft end clearance does not correspond to item J, disassemble the retainer and remove the laminated shim stock under the impeller shart retainer to obtain the specified clearance. When the proper end clearance is obtained, tighten the five screws in the impeller shaft retainer securely and stake to the retainer.

7-40. IMPELLER INTERMEDIATE DRIVE GEAR SHAFT AND PINION CAGE ASSEMBLY (R1820-76 SERIES, -86A AND -86B). (See tool group 64.)

a. The impeller intermediate drive shaft pinion front cage and rear cage are a matched assembly. Prior to assembly of the bushings and pinions, check the fit of the bushings in the front and rear cages, and of the pinions in the bushings. Refer to references 436 and 437, Table of Limits, Section IX.

b. Install the bushings on the pinion rear trunnions, and install the pinions in the rear cage.

c. Install the impeller intermediate drive gear shaft.

d. Install the bushings on the front trunnions and install the front cage.

e. Install the front cage to rear cage washers and bolts.

f. Place the assembly in fixture and install in a vise. Torque the bolts 275 - 300 inch-pounds and bend the washers up against the heads of the bolts as instructed in paragraph 7-7.

7-41. ACCESSORY DRIVE AND STARTER SHAFT ASSEMBLY. (See tool groups 1 and 5.)

a. Install the accessory drive gear, counterbored side to the rear, on the accessory drive and starter shaft by mating each lug of the gear between two lugs of the starter shaft.

b. Install fixture in a vise and place the accessory drive and starter shaft, with the gear front end down, in the fixture.

c. Insert two pins in each spring. Grip a spring and two pins using remover and installer and install them between the lugs in the gear and shaft assembly by compressing the spring on the installing tool.

d. When the pins and spring are in position, loosen the tool, remove the jaws from under the pins and rest them on top of the pins. Tap the springs into place. See figure 7-37. Install remaining pins and springs.

e. Attach the accessory drive and starter shaft plate to the drive shaft over the pins and springs with the five screws. Torque the screws to 18-20 inch-pounds and lockwire.

f. Install the oil retaining plug in the rear of the shaft and secure with a retaining ring. Remove the gear and shaft from the fixture.

g. Check the side clearance and gap of accessory drive and starter shaft oil seal rings. Refer to references 231 and 232, Table of Limits, Section IX.

7-42. MAGNETO DRIVE GEAR ASSEMBLY. (See tool group 80.)

a. Install the magneto drive oil seal collar using installing tool.

b. Locate the magneto drive gear on the drive shaft and attach with six screws.

c. Install the assembly in fixture and place in vise. See figure 7-38.

d. Torque the screws to 80-85 inch-pounds and lockwire in pairs.

7-43. FUEL PUMP AND DUAL ACCESSORY DRIVE GEAR ASSEMBLY. (See tool groups 51 and 63.)

7-43A. Locate the fuel pump and dual accessory drive shaft on the fuel pump and drive gear, install the attaching screws.

a. Install the assembly in fixture. Place in vise.

b. Torque the attaching screws to 80-85 inch-pounds. See figure 7-39. Lockwire the screws in pairs.

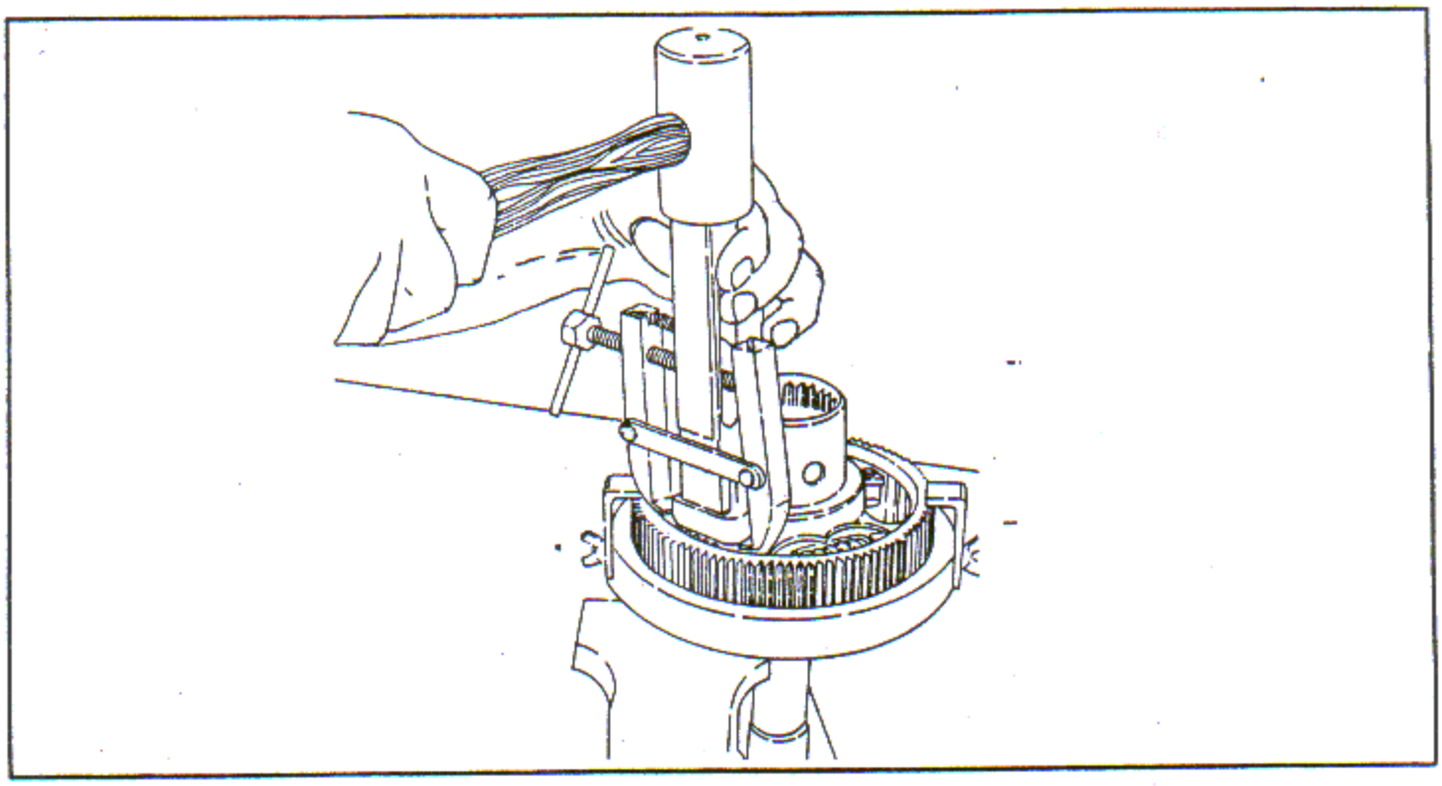

Figure 7-37. Installing Springs and Pins in Accessory Drive and Starter Shaft

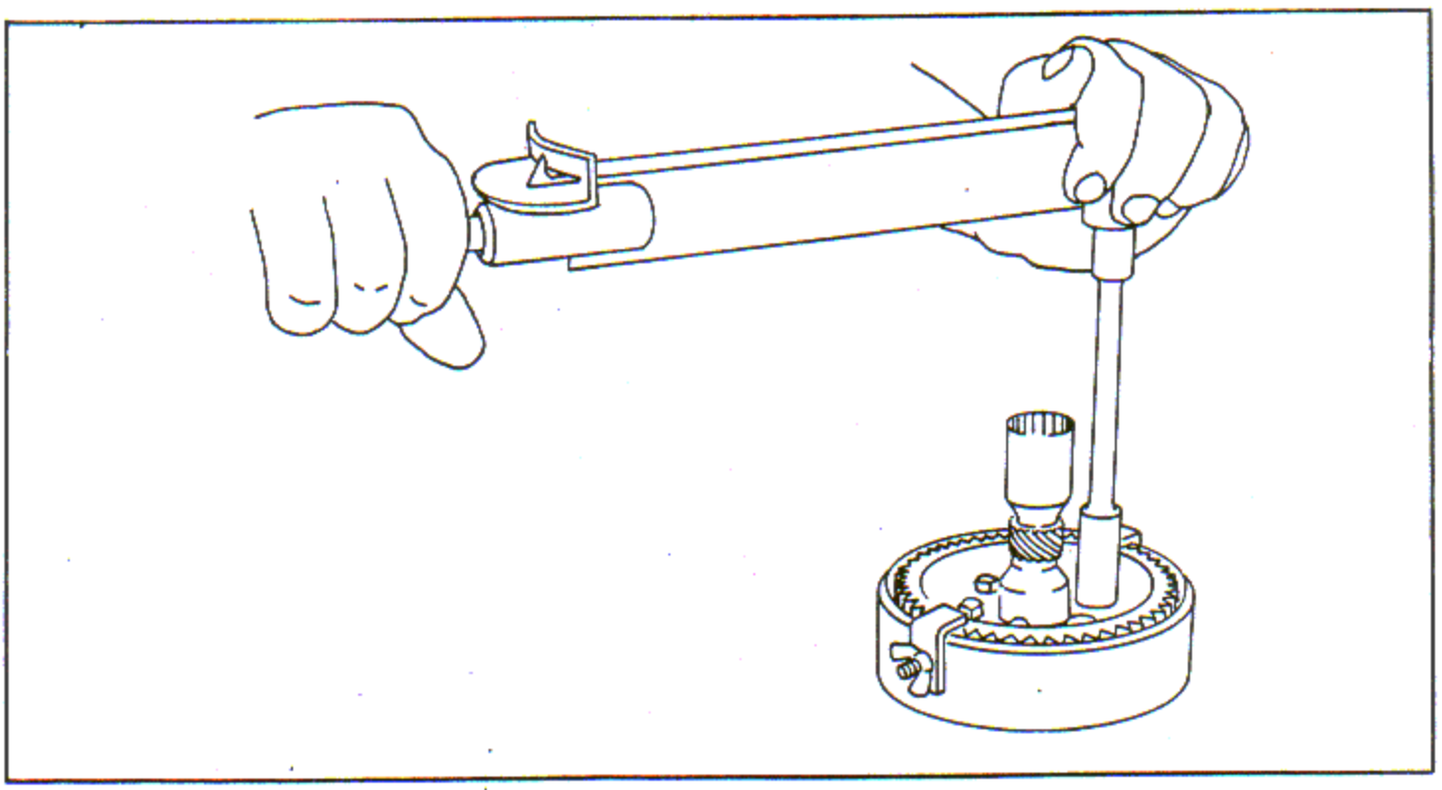

Figure 7-38. Torquing Magneto Drive Gear to Shaft Screws

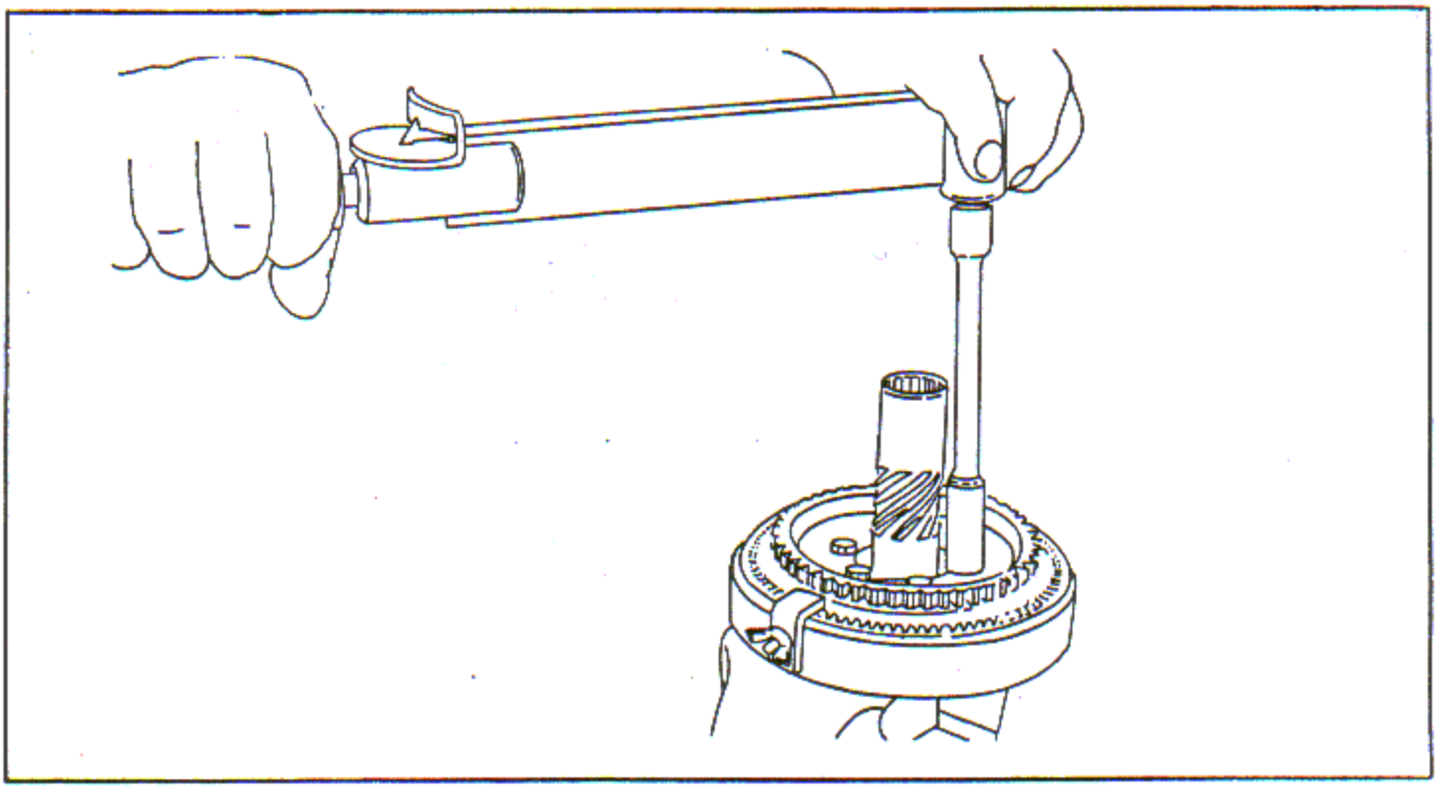

Figure 7-39. Torquing Fuel Pump and Dual Accessory Drive Gear to Shaft Screws

7-44. SUPERCHARGER CLUTCH OIL CONTROL VALVE ASSEMBLY (R1820-76SERIES, -86A AND -86B).

a. Install spring, stop washer, and a second spring over the clutch oil control valve.

b. Install the spring upper washer and the inner and outer packing on the shaft.

c. Lubricate the assembly with engine oil and install the assembly in the clutch control housing.

d. Attach the nut and washer finger tight to hold assembly together.

7-45. SUPERCHARGER CLUTCH TO REAR HOUSING COVER INSTALLATION (R1820-76 SERIES,-86A AND -86B). (See tool groups 63 and 131.)

a. Place the supercharger rear cover rear side down on stand.

b. Reinstall any plugs which were removed at disassembly.

c. Tap the impeller drive multi-plate clutch sleeve into the rear cover over the attaching studs. Use a fiber drift. Check the sleeve I.D. for size and circularity in the clutch piston ring travel area. Circularity must be within 0.001 inch. If the I.D. is no greater than 4.065 inches, select a standard size piston ring. If the I.D. is 4.073 - 4.074 inches, select a 0.010 OS piston ring.

d. Check the side clearance and gap of the multi-plate piston ring against references 415 and 416, Table of Limits, Section IX. Install the ring on the piston, install the piston in the sleeve so that the teeth mate with those of the sleeve.

e. Install the plug and shaft of installing tool in the intermediate impeller drive shaft rear bushing. Place the clutch release spring and the impeller drive gear shaft spacer over the shaft of the tool with the sleeve of the spacer in the spring.

f. Install the clutch thrust washer in the clutch adapter and place them over the spacer and spring. Align the slots in the washer with the mating slots

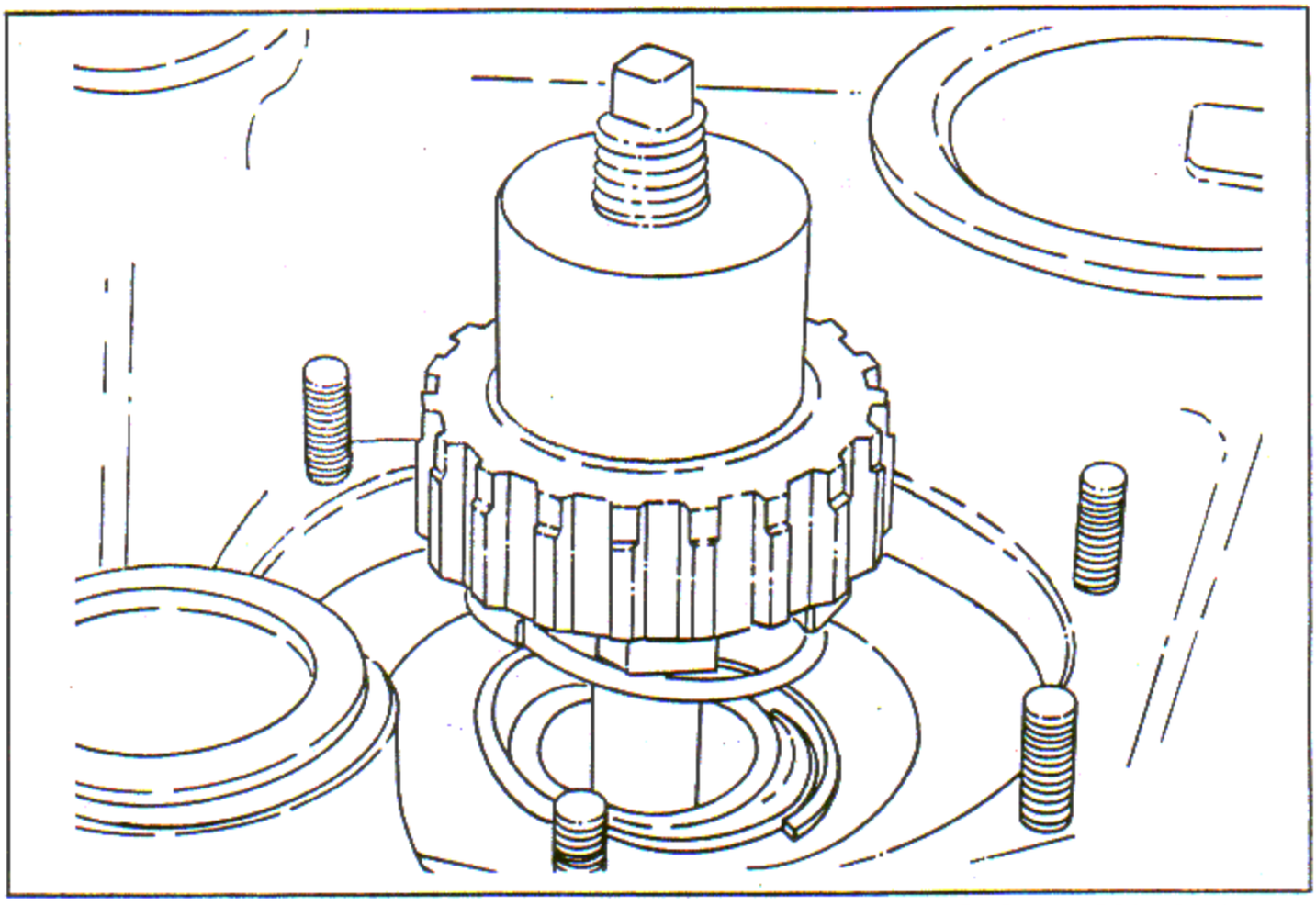

Figure 7-40. Using Multi-Plate Clutch Housing Installing Tool (R1820-76 Series, -86A, -86B)

in the piston. Install the upper part of installing tool on the shaft and compress the assembly by screwing it down. See figure 7-40.

g. Install the four clutch discs and three plates alternately with the bevel on the discs facing down, starting with a disc. Mate the splines of the discs with the splines of the clutch adapter; align the lugs of the plates with each other and center each row between two attaching holes of the clutch sleeve. Check alignment by inserting a thin strip of metal down along the outside of the plates.

h. Place the clutch housing over the last disc. Engage the clutch plates in the slots in the housing, secure the housing to the studs. Install nuts and washers, torque the nuts to 70-95 inch-pounds and cotterpin.

i. Remove installing tool; push down on adapter to check for freedom of movement.

7-46. SUPERCHARGER CLUTCH OIL CONTROL VALVE TO SUPERCHARGER REAR HOUSING COVER INSTALLATION (R1820-76 SERIES, -86A, -86B).

a. Measure the I.D. of the clutch oil control valve sleeve recess in the rear cover. The I.D. will be standard, 0.010 O.S. or 0.020 O.S. Select a sleeve which will provide the fit specified in reference 457, Table of Limits, Section IX. Chill the sleeve in dry ice at least 15 minutes prior to installation. Lightly tap the sleeve into the cover. Assure that the sleeve is bottomed in the recess.

NOTE

Prior to installation of the valve assembly, assure that the clearance between the valve O.D. and the sleeve I.D. is within the fit specified in reference 459, Table of Limits, Section IX.

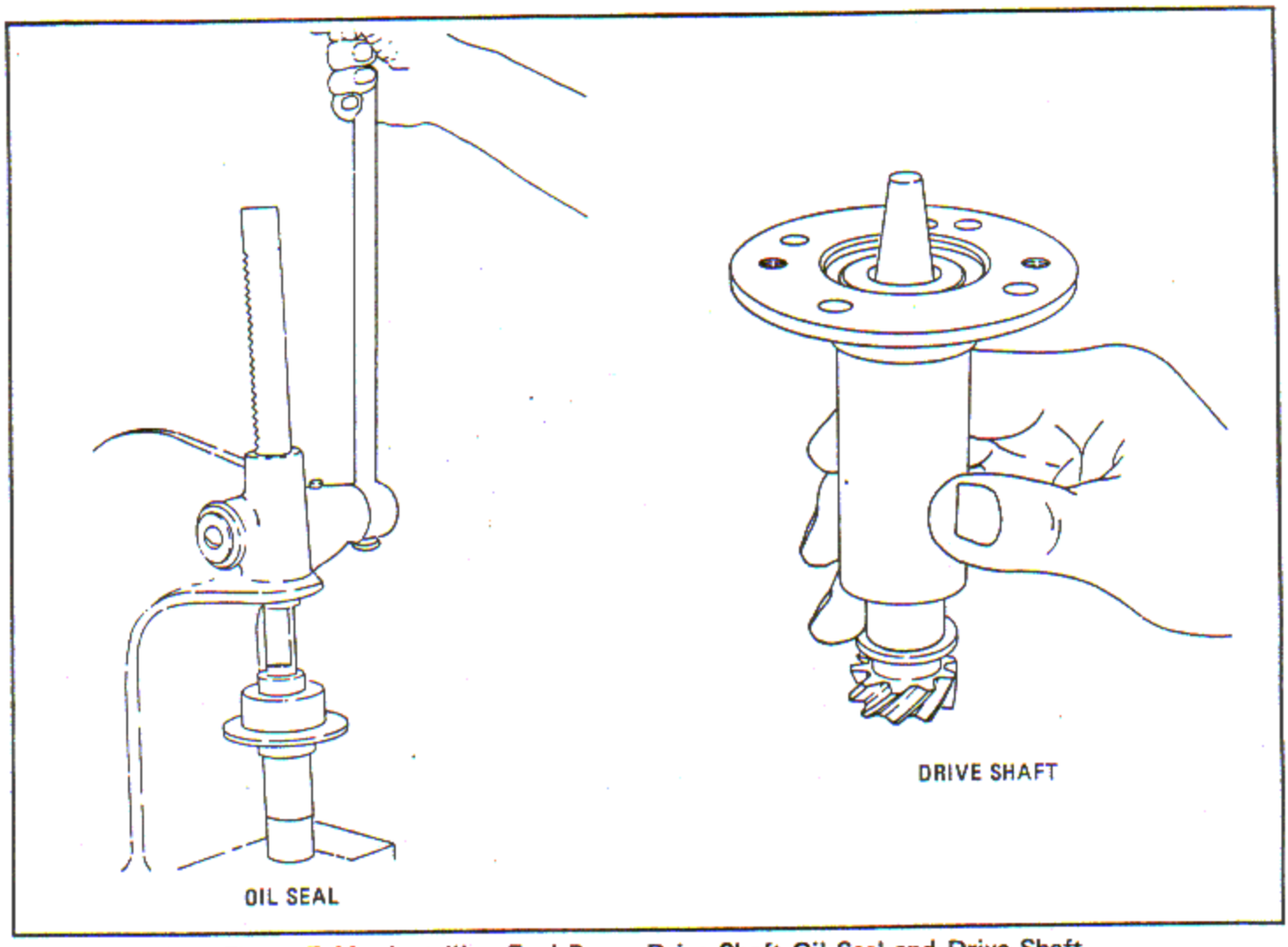

Figure 7-41. Installing Fuel Pump Drive Shaft Oil Seal and Drive Shaft

b. Place a gasket on the valve mounting pad and install the valve assembly over the attaching studs. Secure with washers and fiber lock nuts, torque the nuts to 125 - 140 inch-pounds. Remove the nut and spacer from valve shaft.

7-47. FUEL PUMP DRIVE SHAFT SUPPORT ASSEMBLY. (See tool groups 52 and 53.)

a. Install the oil seal in the fuel pump drive shaft support with the wide metal face toward the outside. Use remover and installer in an arbor press. See figure 7-41.

b. Lubricate the fuel pump drive shaft. Insert the straight end of installing tool in the splined end of the fuel pump drive shaft. Push the shaft and tool, tapered end first, through the shaft of the support and through the oil seal. Remove the tool.

7-48. DUAL ACCESSORY DRIVE ASSEMBLY. (See tool groups 39 and 40.)

a. Locate the dual accessory drive intermediate gear on the idler gear and secure with six screws. Install the assembly in fixture and tighten the screws to 80 - 85 inch-pounds using wrench. Lockwire the screws in pairs.

b. Install the two oil seals in the dual accessory drive housing with installing tool A. See figure 7-42.

NOTE

The dual accessory drive assembly will be completed when it is installed on the supercharger rear cover.

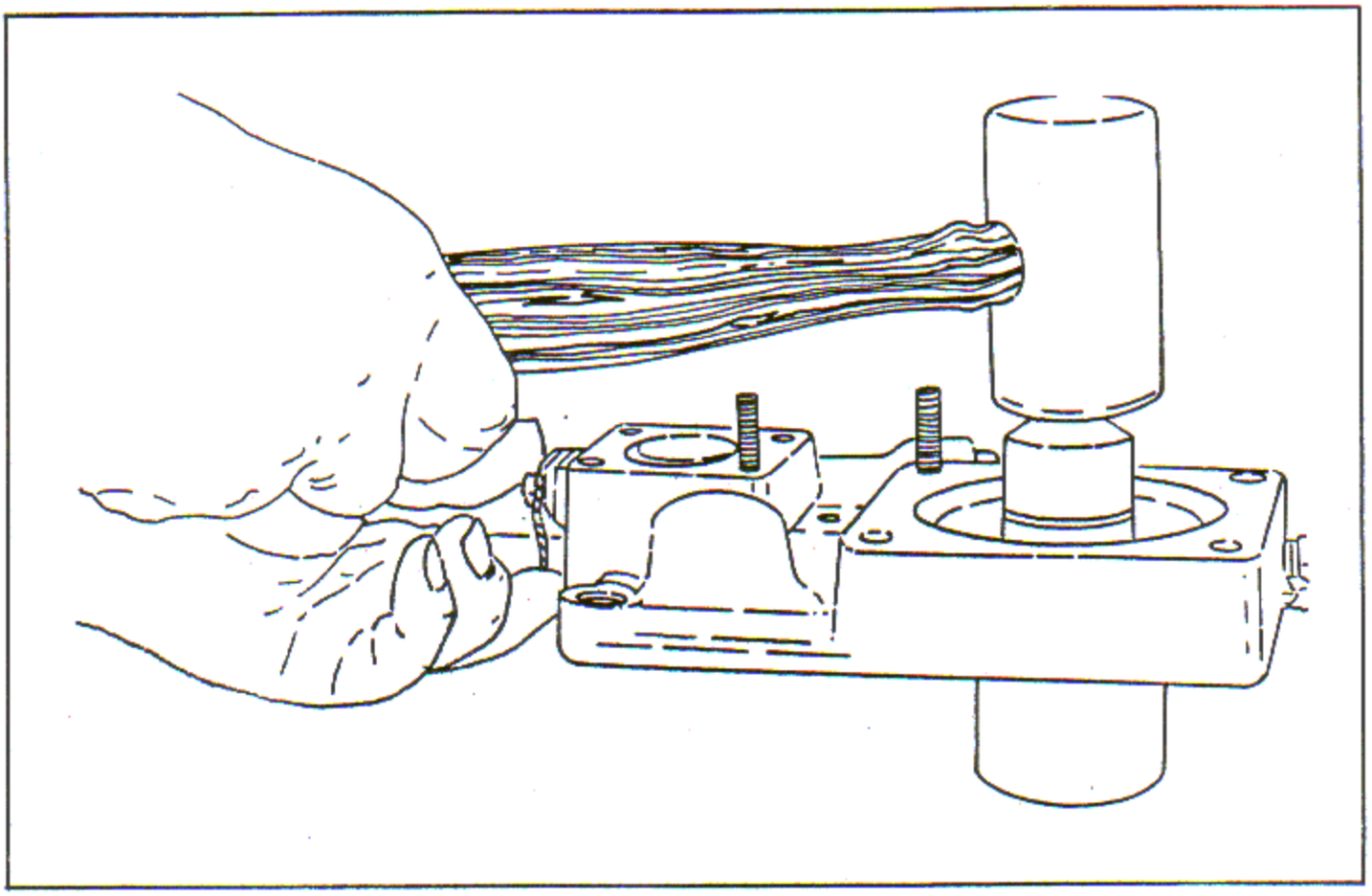

Figure 7-42. Installing Dual Accessory Drive Oil Seals

7-49. REAR OIL PUMP ASSEMBLY (R1820-76 SERIES).

NOTE

The rear oil pump end plate, the pump body cover, tachometer drive gear housing and cover, have mating numbers on the left side near the top. Assemble only mated parts.

a. Install the three oil temperature gage connection substituting plugs with gaskets and packing rings. Install the oil pressure gage connection plug.

b. Install the oil pressure relief valve body and torque to the value indicated in reference 925, Table of Limits, Section IX, using wrench in the notches of the valve body and an open end wrench on the hex head of the special wrench. See figure 7-43. Insert the relief valve closed end first. Place the spring in the valve. Turn the adjusting screw all the way into the valve body and back it off two and one-half turns. Install the adjusting screw locknut washer with flat side against the valve body. Install and torque the adjusting screw lock nut to the value indicated in reference 926, Table of Limits, Section IX, using wrench. Install the relief valve cap so that it is centered within the washer. Torque the cap to the value specified in reference 927, Table of Limits, Section IX, and lockwire.

NOTE

Use wrench to lock the adjusting screw in the pressure relief valve after the oil pressure is adjusted.

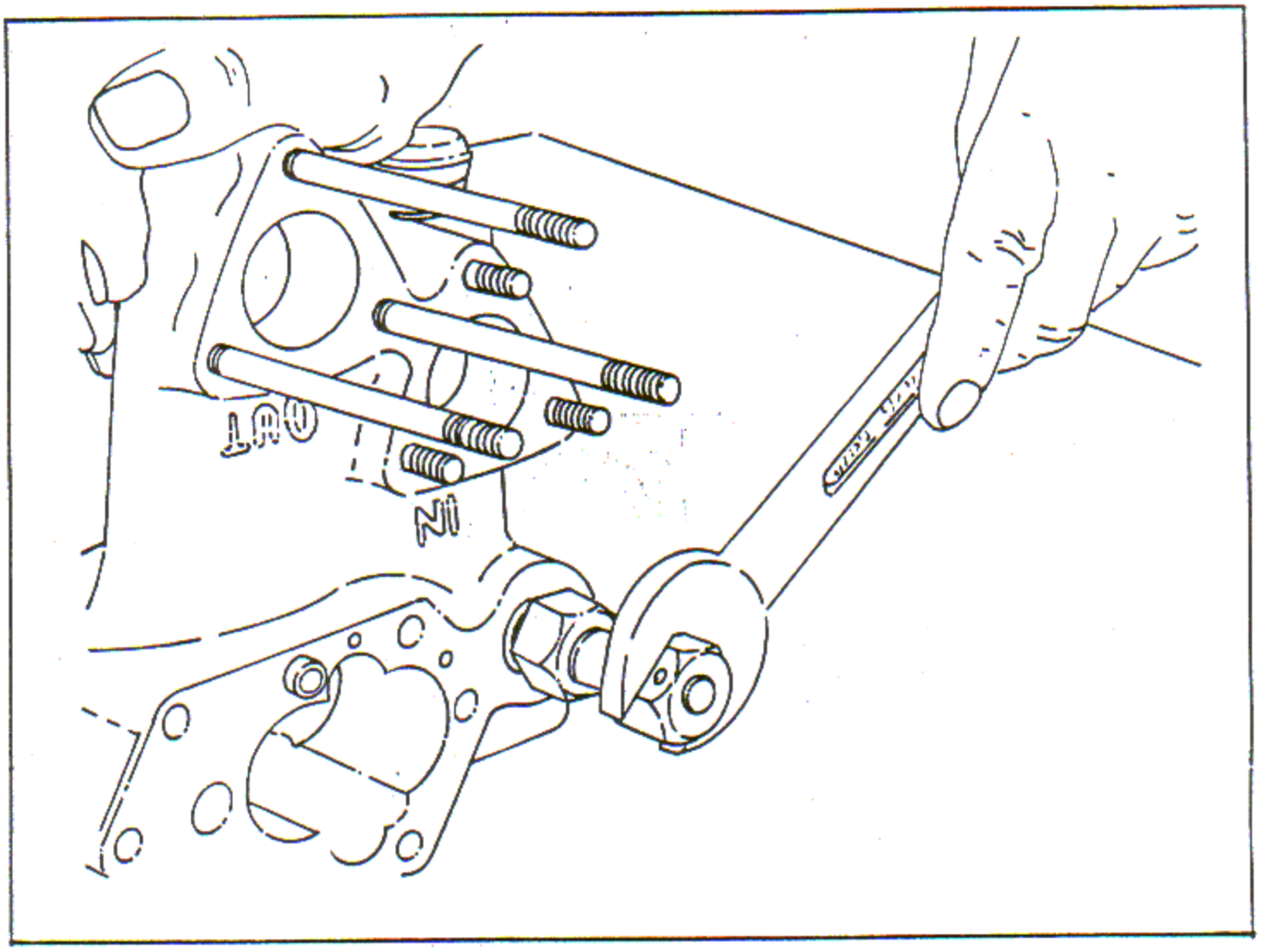

Figure 7-43. Installing Oil Pressure Relief Valve Body

CAUTION

Ensure the proper spring is installed in the oil pressure relief valve. Installation of the improper spring will result in excessively low oil pressure. Check oil pressure relief spring (P/N 110567) for spring wire diameter 0.063 inch and length/load 6 - 8 pounds at 1.38 inches. Oil strainer by-pass valve spring (P/N BA5-13) conforms to spring wire diameter 0.055 inch and length/load 7.13 - 8.92 pounds at 1.2 inches.

NOTE

During assembly of the P/N 434255 rear oil pump, use truarc ring, P/N N5000-100-S-MF, instead of the present ring (P/N 149600) for retaining the check valve in the check valve body.

c. When the oil pump check valve body requires replacement, machine the body prior to installation to obtain the ID, depth, corner radius and surface finish as given in figure 7-44. Ensure Fit No. 521, Table of Limits, Section IX, will be maintained in assembly. Assemble per standard procedure. Install the oil seal ring on the oil pump check valve and install the valve, closed end first, in the pump. Ensure that the vent hole beside the check valve is open. Insert the check valve spring. Install a gasket and the check valve retainer. Torque the oil pump check valve retainer to the value specified in reference 924, Table of Limits, Section IX, and lockwire.

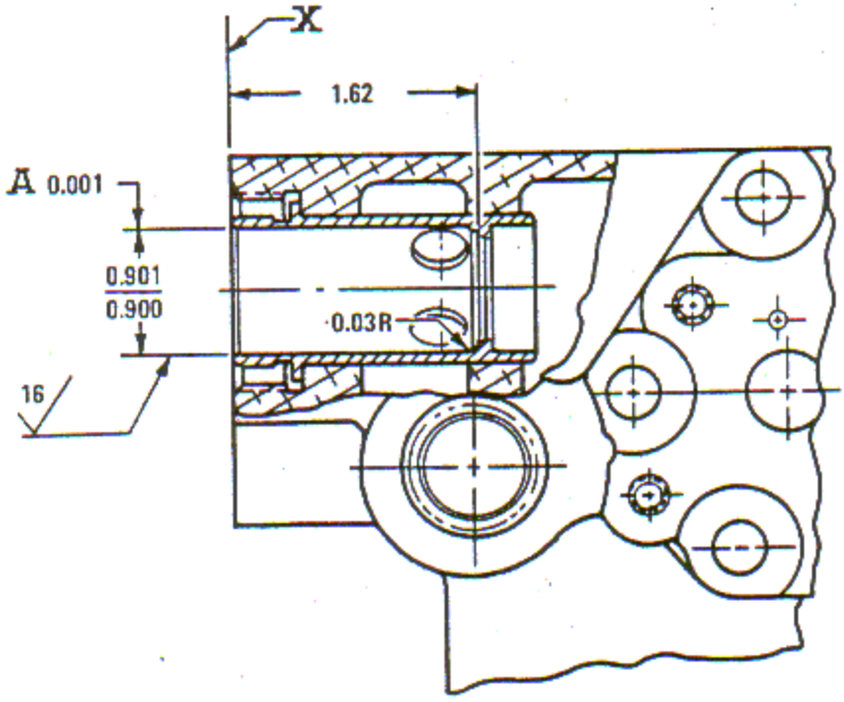

A SURFACE CONSTRUCTED AROUND OR AT RIGHT ANGLES TO A COMMON AXIS WHEN PART IS MOUNTED ON SURFACE X MUST BE WITHIN FULL INDICATOR READING.

Figure 7-44. Finish Machining Oil Pump Check Valve Body

d. Install the oil pump drive shaft gear and the driven gear (scavenge pump). Place a straight edge across the pump body and check the end play of the gears with a feeler gage as shown in figure 7-45. Check these clearances against references 525 and 529, Table of Limits, Section IX. Allow for the thickness of the end plate gasket.

e. Place a gasket on the pump body and install the oil pump end plate. Tap the plate into position as the hollow dowels may fit tightly.

f. Install the oil pump drive coupling with the internal splines toward the threads on the shaft. Install the washer and coupling nut. Hold the coupling with wrench and tighten the nut using a suitable box end wrench. Torque nut to 250 - 325 inch-pounds. See figure 7-46. The cotter pin head should be flattened before installing and the legs of the cotter pin bent around the nut.

g. Install the oil pressure pump gears in the opposite side of the pump body. Install the internally splined drive gear over the splines of the scavenge pump drive gear. Place a straight edge across the pump body and check the end clearance of the gears with a feeler gage against reference 533, Table of Limits, Section IX. Allow for the gasket thickness.

h. Place a gasket on the pump body and install the oil pump cover. Turn the pump drive shaft to check for freeness. Fasten the assembly together temporarily with wire or bolts through the end plate, body and cover.

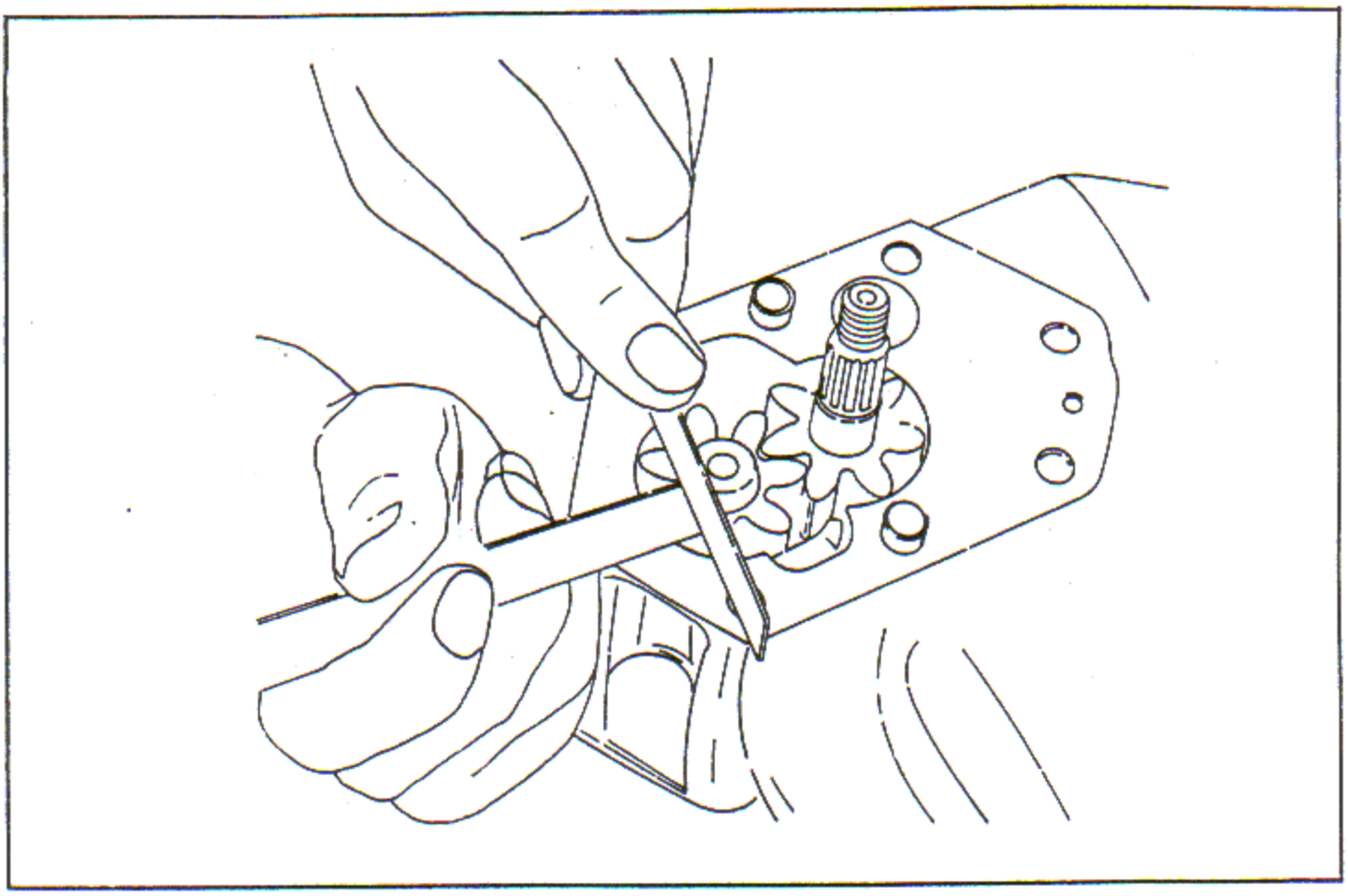

Figure 7-45. Checking End Clearance of Oil Pump Drive Shaft Gear and Driven Gear

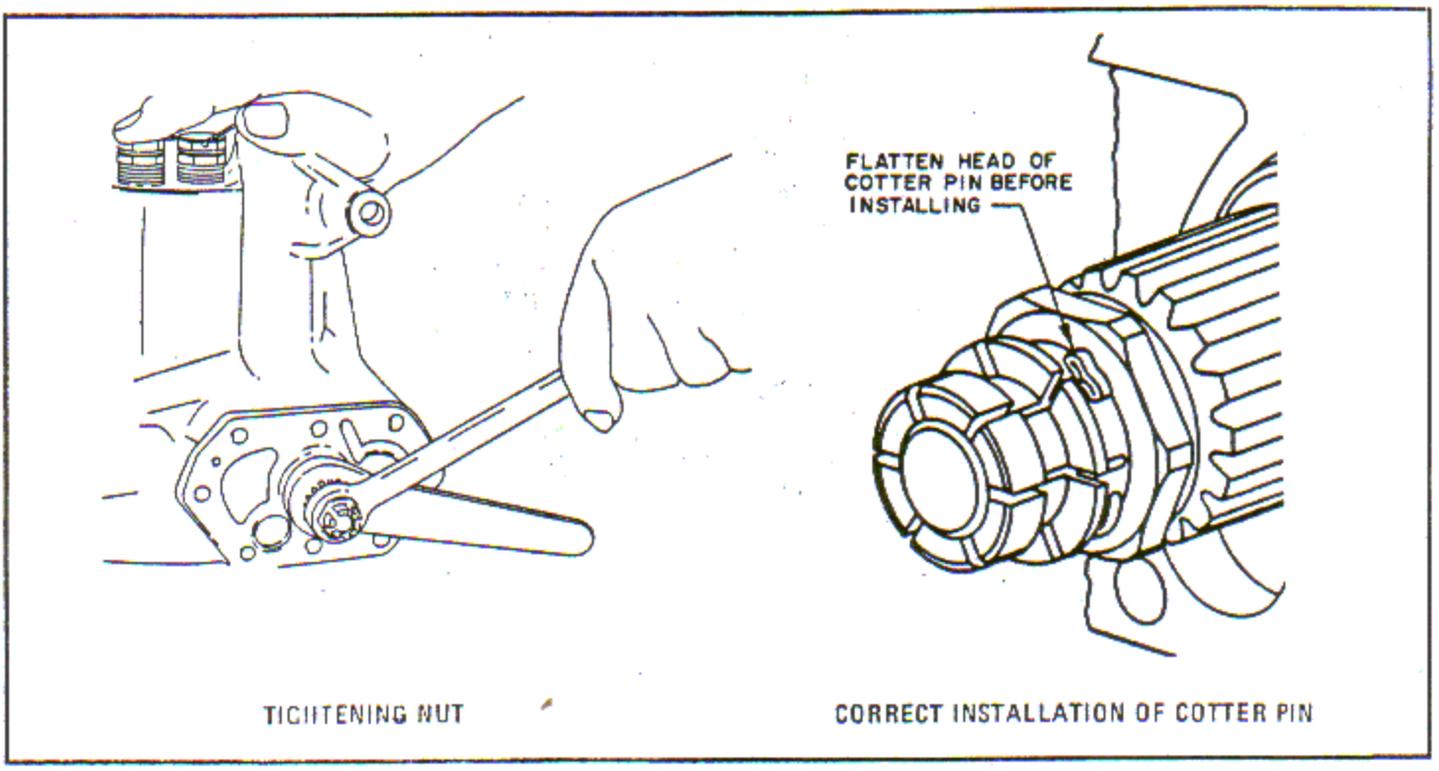

Figure 7-46. Tightening Oil Pump Drive Coupling Nut and Installing Cotter Pin.

i. Install the two oil seals in the tachometer drive shaft housing cover. The oil seal installing tool A consists of plug and a base. Place the base with the counterbored end up on a bench. Hold the housing cover with the front down on the base, place a seal, metal side up, on the cover and insert the plug of the tool through the seal and cover into the base. Use a mallet or arbor press to press the seal into the cover. See figure 7-47.

NOTE

The oil pump assembly will be completed when the pump is installed on the supercharger rear cover.

7-50. REAR OIL PUMP ASSEMBLY (INCREASED CAPACITY) (R1820-80 SERIES, -86A AND -86B). (See tool groups 115 and 117.)

a. Install the two oil temperature gage connection substituting plugs with gaskets and packing rings.

b. Assemble the rear oil pump check valve and spring into the check valve body and secure with retaining ring. Install the check valve assembly and packing ring. Torque the oil pump check valve body to the value specified in reference 942, Table of Limits, Section IX, and lockwire.

c. Install the lock ring in the forward end of the oil pressure relief valve body and install the two packing rings. Install the relief valve body and torque to the value specified in reference 945, Table of Limits, Section IX. Insert the relief valve in the valve body and the spring inside the valve end. Turn the adjusting screw all the way into the valve body and then back off ten turns.

d. Install the locknut, flat side against the valve body, and tighten with wrench. Torque to the value specified in reference 943, Table of Limits, Section IX. Install the relief valve cap with the washer cupping the cap. Torque the cap to the value specified in reference 944, Table of Limits, Section IX, and lockwire.

e. Install the oil pressure pump gears with the internally splined drive gear over the mating splines on the scavenge pump drive gear. Check the end clearance of the gears using a straight edge and feeler gage. Check against the value in reference 625, Table of Limits, Section IX. Allow 0.002 inch for gasket thickness.

f. Place a gasket on the pump body and install the oil pump cover and retaining screw. Install the tachometer drive shaft gear assembly and turn to check for gear freeness.

g. Place a gasket on the pump cover and temporarily install the tachometer drive shaft gear housing using two nuts and washers. Install the tachometer drive shaft gears.

h. Install the two oil seals in the tachometer drive shaft housing cover. Place a gasket on the housing and install the cover using two nuts and washers.

i. Install the two tachometer substituting covers and secure with one nut and washer on each cover.

j. Install the oil pump drive shaft and driven gears (scavenge pump). Place a straight edge across the pump body and check the end clearance of the gears with a feeler gage. Check against the value in reference 620, Table of Limits, Section IX. Allow 0.002 inch for the thickness of the end plate gasket.

k. Place a gasket on the pump body and install the oil pump end plate. Tap the plate lightly into position as the hollow dowels may fit tightly. Install the end plate retaining screw.

l. Install the oil pump drive coupling with the internal splines toward the threads on the shaft. Install the washer and coupling nut. Hold the coupling with wrench and torque the nut to 250 - 325 inch-pounds. Cotterpin the coupling nut to the shaft.

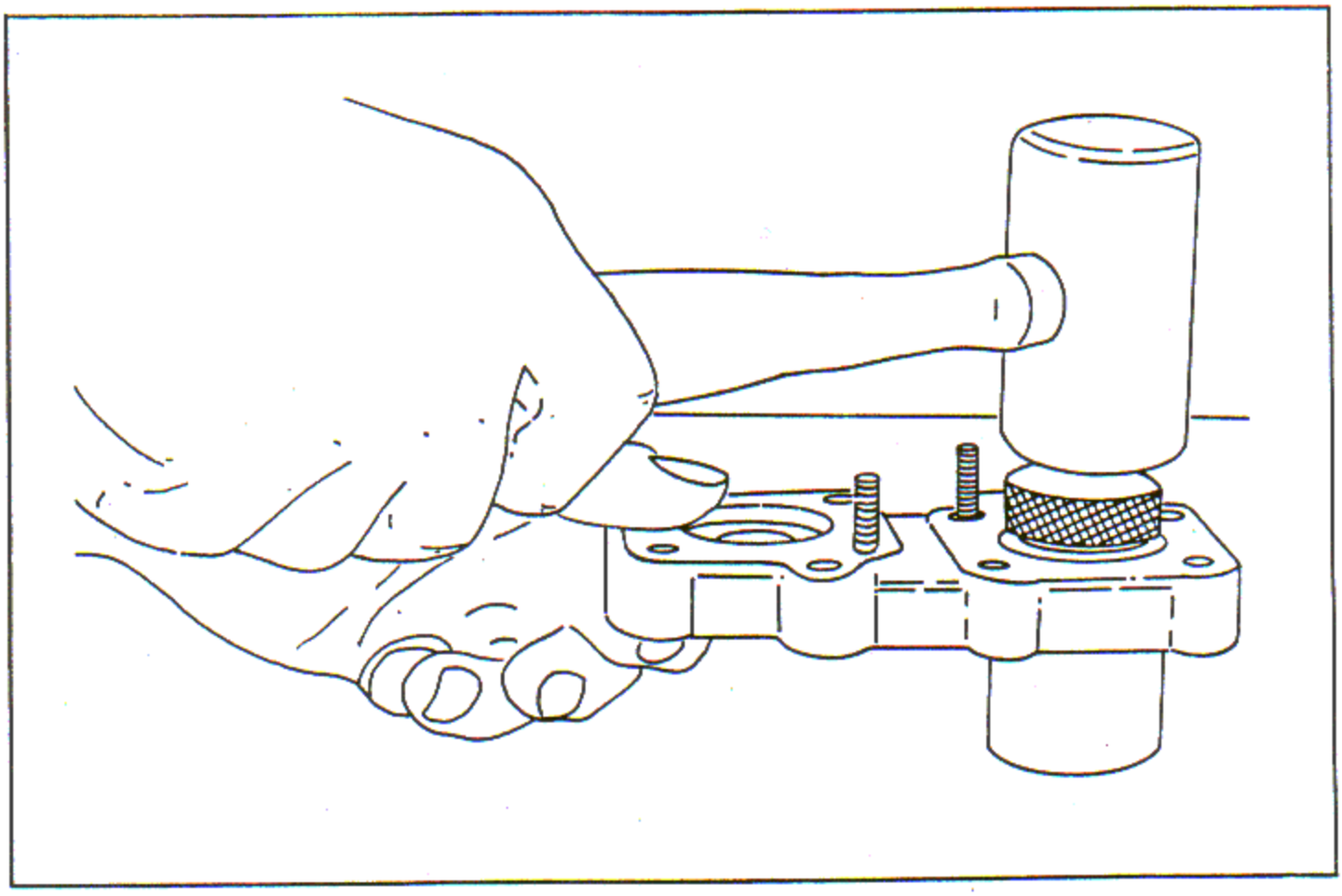

Figure 7-47. Installing Tachometer Drive Shaft Oil Seal

m. Install the inlet and outlet connection flange substituting covers and secure with one nut and washer on each cover.

n. Insert the scavenge oil strainer check valve ball and spring into the check valve body. Install the strainer housing plug and packing ring. Torque the plug to the value specified in reference 949, Table of Limits, Section IX, and lockwire.

o. Assemble the scavenge oil strainer as specified Section V, paragraph 5-58, taking care to ensure that the retaining ring fits properly in the groove.

p. Install the scavenge oil strainer assembly and packing ring in the pump body and torque to the value specified in reference 948, Table of Limits, Section IX, and lockwire.

q. Install the pre-oil check valve assembly and packing ring in the pump body and torque to the value specified in reference 946, Table of Limits, Section IX. Install the check valve cap and torque to the value specified in reference 947, Table of Limits, Section IX.

r. Assembly will be completed when the pump is installed on the engine.

7-51. SUPERCHARGER REAR COVER ASSEMBLY (R1820-80 SERIES, -86A AND -86B). (See tool group 131.)

a. Place the supercharger rear cover rear side down on stand.

b. Reinstall any plugs which were removed at disassembly.

c. Install a rubber ring on the rear end of the impeller drive gear shaft and pinion support. Locate the support over its attaching studs. Secure it to the supercharger rear housing cover with the attaching washers and nuts. Torque nuts to 70-95 inch-pounds. Cotterpin the nuts. See figure 7-48.

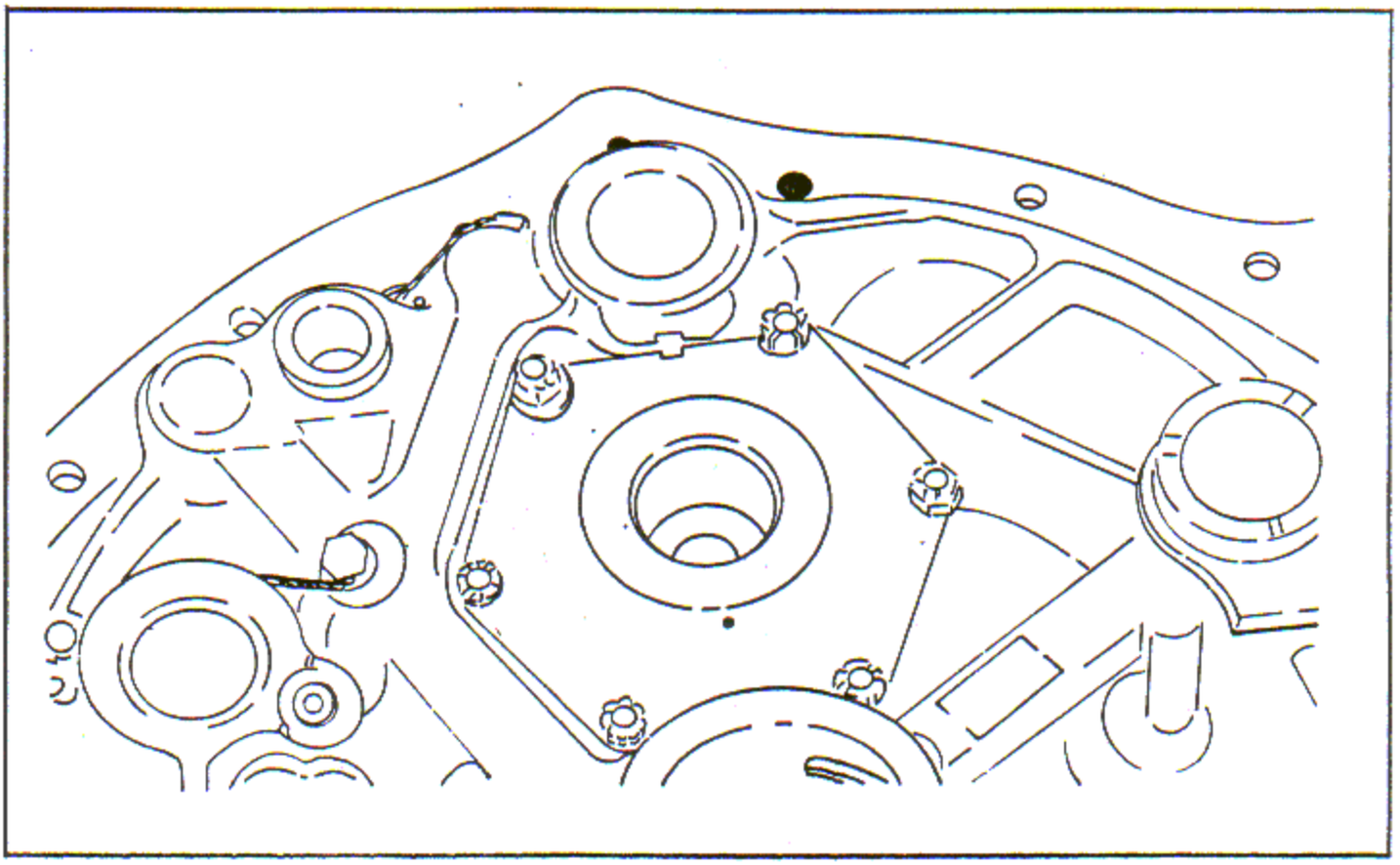

Figure 7-48. Impeller Drive Gear Shaft and Pinion Support Installed (R1820-80 Series)

7-52. IMPELLER DRIVE AND ACCESSORY DRIVE AND STARTER SHAFT INSTALLATION (R1820-76 SERIES, -86A AND -86B). (See tool groups 70 and 134.)

a. Install the supercharger rear housing, front side down, in stand.

b. Place the impeller shaft drive gear in the bushing in the supercharger rear housing.

c. Check the side clearance in the impeller shaft retainer and gap in the accessory drive and starter shaft of the impeller shaft retainer oil seal ring and compare with references 420 and 421, Table of Limits, Section IX. Place the impeller shaft thrust ring, flat side down, on the rear of the impeller shaft. Install the retainer laminated shim and the retainer and ring assembly over the thrust ring. Attach the retainer to the supercharger rear housing with five screws and tighten.

d. Check the impeller shaft end clearance by inserting a feeler gage between the flat side of the thrust ring and the rear end of the impeller shaft. See figure 7-49. Pull the feeler all the way across the end of the impeller shaft so it will lift the washer straight up. Clearance should be the same as that selected in paragraph 7-36, step e. If the clearance is incorrect, remove the retainer and shim. Add shims or remove stock from the shim to correct the clearance. When clearance is correct install the shims, retainer and screws. Torque the screws to 70 - 100 inch-pounds. Stake the screws with punch. See figure 2-12.

e. Place the impeller intermediate drive shaft pinion front cage bushing on the front of the pinion cage and install the impeller intermediate drive shaft with the pinion and cage assembly. The pinion teeth mate with the internal teeth of the impeller shaft drive gear.

f. Install the accessory drive and starter shaft thrust ring in the recess of the impeller shaft retainer. Install the accessory drive and starter shaft assembly by inserting the shaft through the impeller shaft.

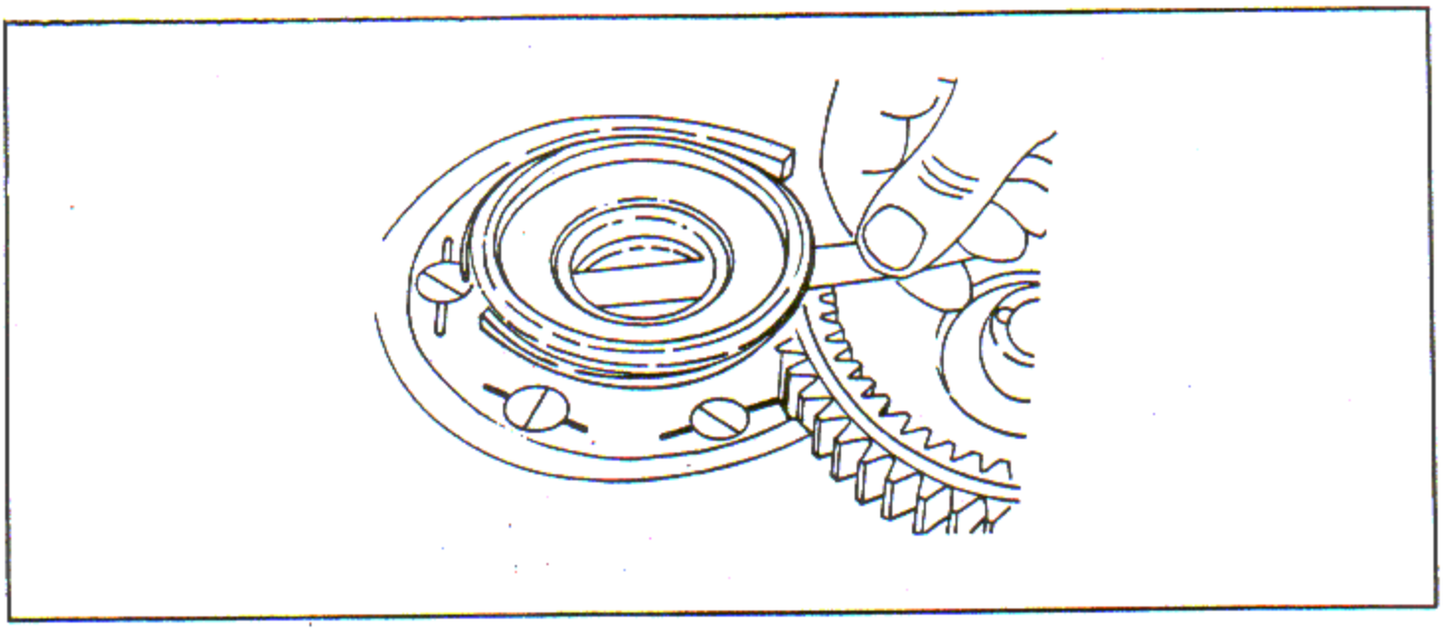

Figure 7-49. Checking Impeller Shaft End Movement

g. Place the impeller intermediate drive gear, short splines first, over the intermediate impeller drive gear shaft. Place the oil pump drive gear, the fuel pump and dual accessory drive gears, the two magneto drive gears and the generator drive gear on the posts in the supercharger rear housing.

NOTE

Install a new impeller low speed drive clutch cam assembly and new impeller drive clutch rollers at each overhaul of R1820-86B model engines. Except for -86A, -86B model engines. Except for the above requirement, used parts examined and found acceptable by the inspection criteria described in paragraph 6-161 may be installed on R1820-76C, -76D, -86A and -86B models as required.

h. Put the impeller intermediate drive gear thrust washer, milled side up or to the rear of the engine, in the clutch roller retainer and generator drive gear. Install the clutch cam in the roller cage with the lugs on the cam between the slots of the cage and install the rollers. Place the roller cage assembly in the retainer with the lugged side facing up or to the rear of the engine. Install the retainer, with the roller clutch, gear end first over the intermediate impeller drive gear.

NOTE

At assembly of the roller clutch, ensure the diametrical clearance between the outside diameter of the cam assembly and the inside diameter of the cage is 0.004 - 0.006 inch loose. This will require rework of the cage inside diameter to provide sufficient clearance between the parts. Refer to paragraph 6-670.

7-53. IMPELLER DRIVE AND ACCESSORY DRIVE AND STARTER SHAFT INSTALLATION (R1820-80 SERIES). (See tool groups 70 and 134.)

a. Install the supercharger rear housing, front side down, in stand.

b. Place the impeller drive gear in the bushing in the supercharger rear housing.

c. Check the side clearance (in the impeller shaft retainer) and gap (in the accessory drive and starter shaft) of the impeller shaft retainer oil seal ring and compare with references 420 and 421 in the Table of Limits, Section IX. Place the impeller shaft thrust ring, flat side down, on the rear end of the impeller shaft. Install the retainer laminated shim and the retainer and ring assembly over the thrust ring. Attach the retainer to supercharger rear housing with five screws and tighten.

d. Check the impeller shaft end clearance by inserting a feeler gage between the flat side of the thrust ring and the rear end of the impeller shaft. See figure 7-49. Pull the feeler all the way across the end of the impeller shaft so it will lift the washer straight up. Clearance should be the same as that selected in paragraph 7-37, step c. If the clearance is incorrect, remove the retainer and shim. Add shims or remove stock from shim to correct the clearance. When clearance is correct install the shims, retainer and screws. Torque the screws to 70 - 100 inch-pounds. Stake the screws with punch. See figure 2-12. Turn the housing again so that the front is down.

e. Install the accessory drive and starter shaft thrust ring in the recess of the impeller shaft retainer. Install the accessory drive and starter shaft assembly by inserting the shaft through the impeller shaft.

f. Place the oil pump drive gear, the fuel pump and dual accessory drive gears, the two magneto drive gears and the generator drive gear on the posts in the casting.

g. Install the generator intermediate drive gear on the impeller drive gear shaft splines.

7-54. TWO SPEED IMPELLER DRIVE SPRAG CLUTCH ASSEMBLY (R1820-86A, -86B).

NOTE

Impeller drive sprag clutch components are a matched assembly. Ensure that all match marks correspond.

a. Install the sprag clutch discs, plates, housing, spring, spacer and washer in the rear cover. See figure 7-50.

b. Insert the generator drive gear and adapter assembly (sprag clutch) in the disc and plate assembly. Hold rearward pressure against the sprag.

c. Install the generator drive gear.

d. Install the intermediate impeller clutch drive gear and bushing assembly.

e. Install the accessory drive and starter shaft assembly in the rear cover.

f. Install the intermediate impeller drive shaft with the pinion assembly and retain in the cover using a 5/16 x 24 inch bolt approximately 1-1/2 inch long and a washer.

g. Install four gears in the supercharger rear housing.

h. Lower the cover on the rear housing (center accessory drive shaft rings, small and large).

i. Rotate the impeller to mesh pinions with the ring gear.

j. Rotate the magneto drive gear to mesh all other gears and to mate the splines on the accessory drive and starter shaft with the splines in the crankshaft.

k. Guide four gear shafts into the rear cover.

l. Secure the cover.

m. Remove the retaining bolt and washer installed in step f.

7-55. SUPERCHARGER REAR COVER INSTALLATION (R1820-76 SERIES, -86A AND -86B). (See tool groups 133 and 133A.)

a. Place a gasket on the supercharger rear housing rear parting surface and place oil seal rings on the oil transfer dowels on the rear cover.

b. Place a bar in the generator drive gear shaft hole in the supercharger rear cover and install the cover on the supercharger rear housing. When the cover is nearly in contact with the supercharger rear housing, install turning tool in the right hand magneto drive gear shaft. Turn the gears until all gears mesh. The cover will then drop into position. Figure 7-51 illustrates how the turning tool is used.

c. Install and tighten several supercharger rear cover attaching washers and nuts. Space the nuts evenly (temporary installation only).

d. Remove the plug located between the generator and starter mounting pads. Install adapter through the hole and screw it into the threads provided in the intermediate impeller drive shaft. Check the end clearance of the shaft with a dial indicator. Pull upward on the adapter as shown in figure 7-52. End clearance should agree with ref-

1. ACCESSORY DRIVE AND STARTER SHAFT ASSY
2. GENERATOR DRIVE GEAR AND ADAPTER ASSY (SPRAG CLUTCH)
3. HOUSING
4. PLATE
5. DISC
6. INTERMEDIATE IMPELLER DRIVE SHAFT
7. WASHER (TOOL)
8. BOLT (TOOL) 5/16 - 24 x 1 - 1/2
9. SPRING
10. SPACER
11. WASHER
12. INTERMEDIATE IMPELLER DRIVE CLUTCH ADAPTER MACHINING ASSY
13. GENERATOR DRIVE GEAR
14. GENERATOR DRIVE GEAR ASSY
15. INTERMEDIATE IMPELLER CLUTCH DRIVE GEAR AND BUSHING ASSY

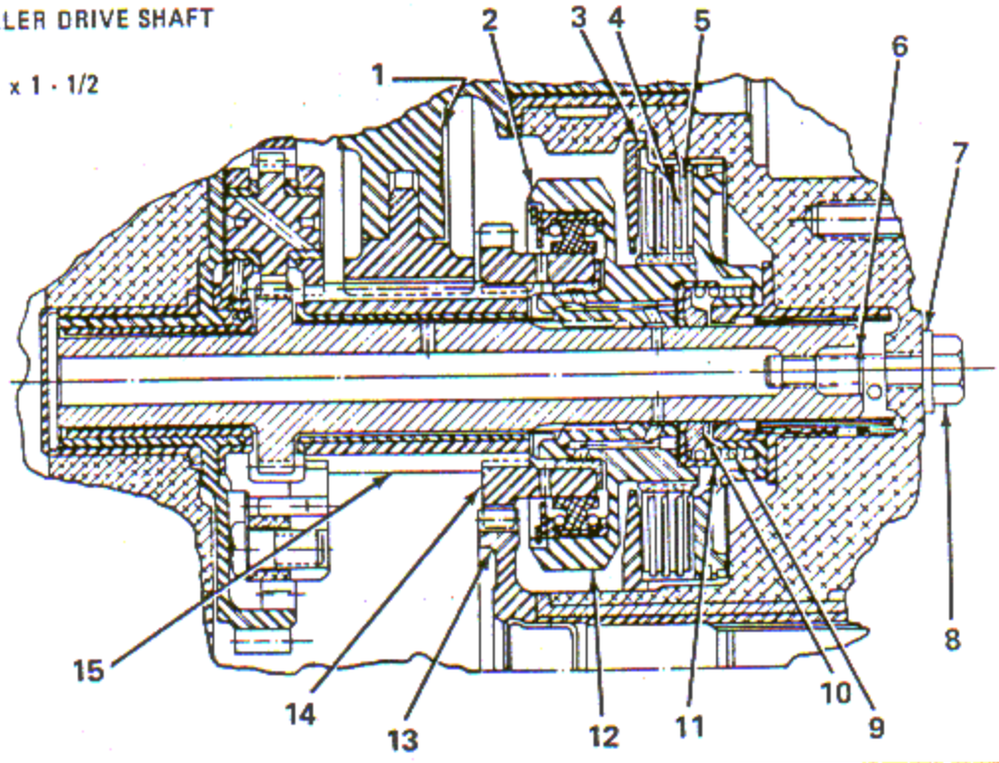

Figure 7-50. Impeller Drive Sprag Clutch

erence 434, Table of Limits, Section IX. If the clearance does not agree with the fits specified, the rear cover must be removed and the clutch disassembled. When the clearance is less than that specified select a spacer or grind the required amount from the intermediate impeller drive shaft spacer. If the clearance is more than that specified, select a new spacer. After reassembling the clutch and installing the rear cover, recheck the end clearance. Remove the tool from the impeller shaft and reinstall the plug in the rear cover.

e. Install three rear cover to rear housing attaching screws, washers and nuts at the top of the cover. Install the rear cover to rear housing attaching bolt at the top of the cover. Install three washers, lock washers and double hex nuts in the three recessed holes in the generator mounting pad. Torque the nuts to 125 - 140 inch-pounds, using wrench. Install two puller holes substituting screws and gaskets. Install washers and nuts on the three studs at the top of the cover, the stud below the right hand magneto pad, and the studs on the left side of the housing except the one located adjacent to the generator pad. Torque to 125 - 140 inch-pounds.

f. Install a gasket and attach the oil tank vent flange with washers and nuts. Torque nuts to 125 - 140 inch-pounds.

g. Insert installing tool in each magneto drive shaft and install the magneto drive oil seal gasket and seal. Place the side of the seal which is marked "T" toward the top or rear of the engine as shown in figure 7-53. Attach the seal with six screws. Torque to 18 - 20 inch-pounds.

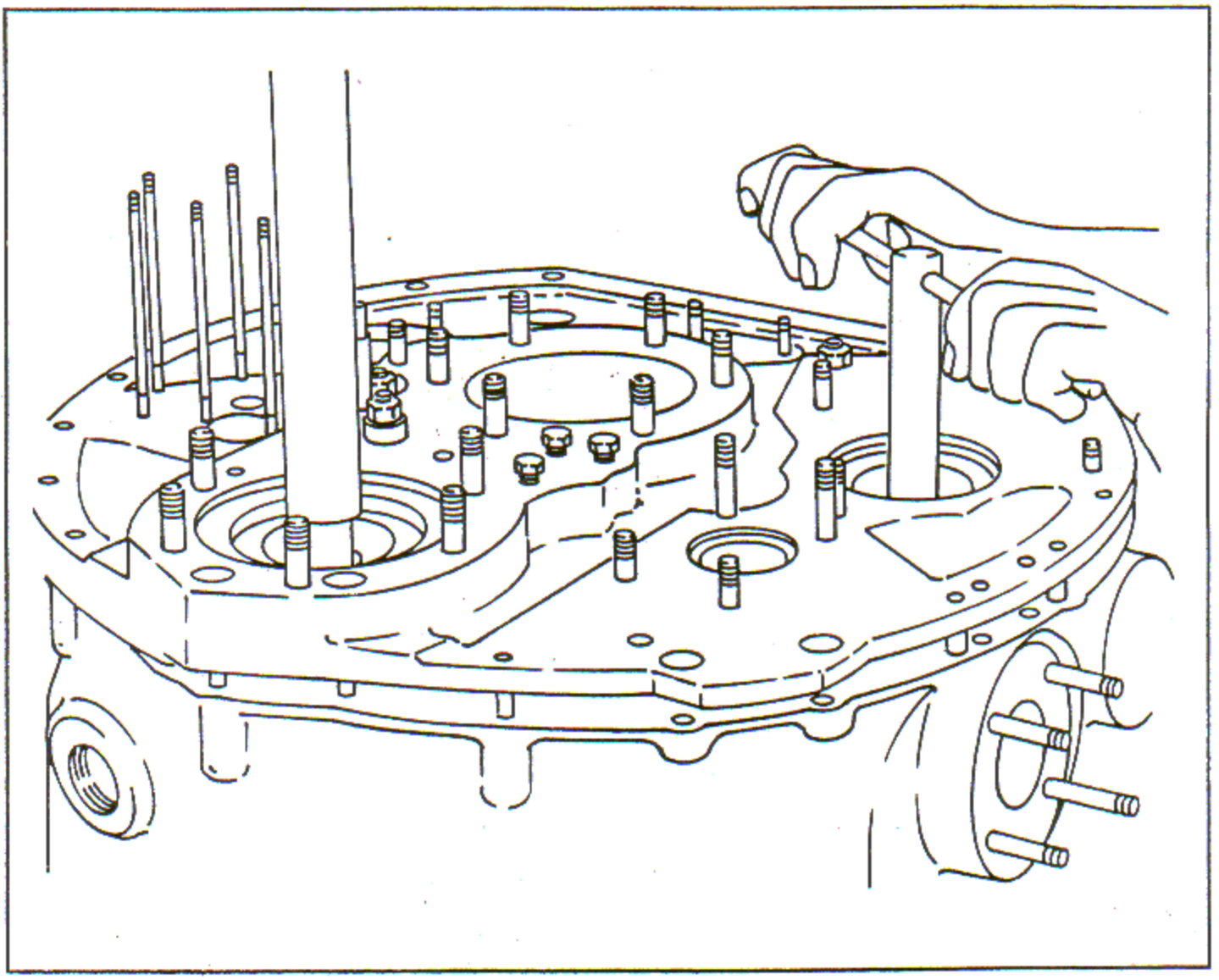

Figure 7-51. Installing Supercharger Rear Cover

h. Install the generator drive oil seal gasket and seal. The surface marked "T" should face up or to the rear of the engine. Secure the seal with six screws. Torque to 18 - 20 inch-pounds.

i. Check the end play of the accessory drive and starter shaft by installing a dial indicator at the rear end of the shaft. Apply pressure at the front end of the shaft pushing toward the rear. See figure 7-54. The end clearance should be as specified in reference 442, Table of Limits, Section IX. If the clearance is not within specified limits, select another accessory drive and starter shaft thrust ring to obtain the proper clearance.

j. Install the starter coupling spacer and coupling. Install the accessory drive and starter shaft oil seal packing, flat side down. Secure it in position with a gasket and retaining ring. Attach the ring temporarily with four screws equally spaced.

k. Measure the distance from the starter pad to the tip of the starter coupling jaw and compare with reference 450, Table of Limits, Section IX. Use a depth gage. See figure 7-55. If the clearance is incorrect, select a starter coupling spacer to bring the clearance within limits.

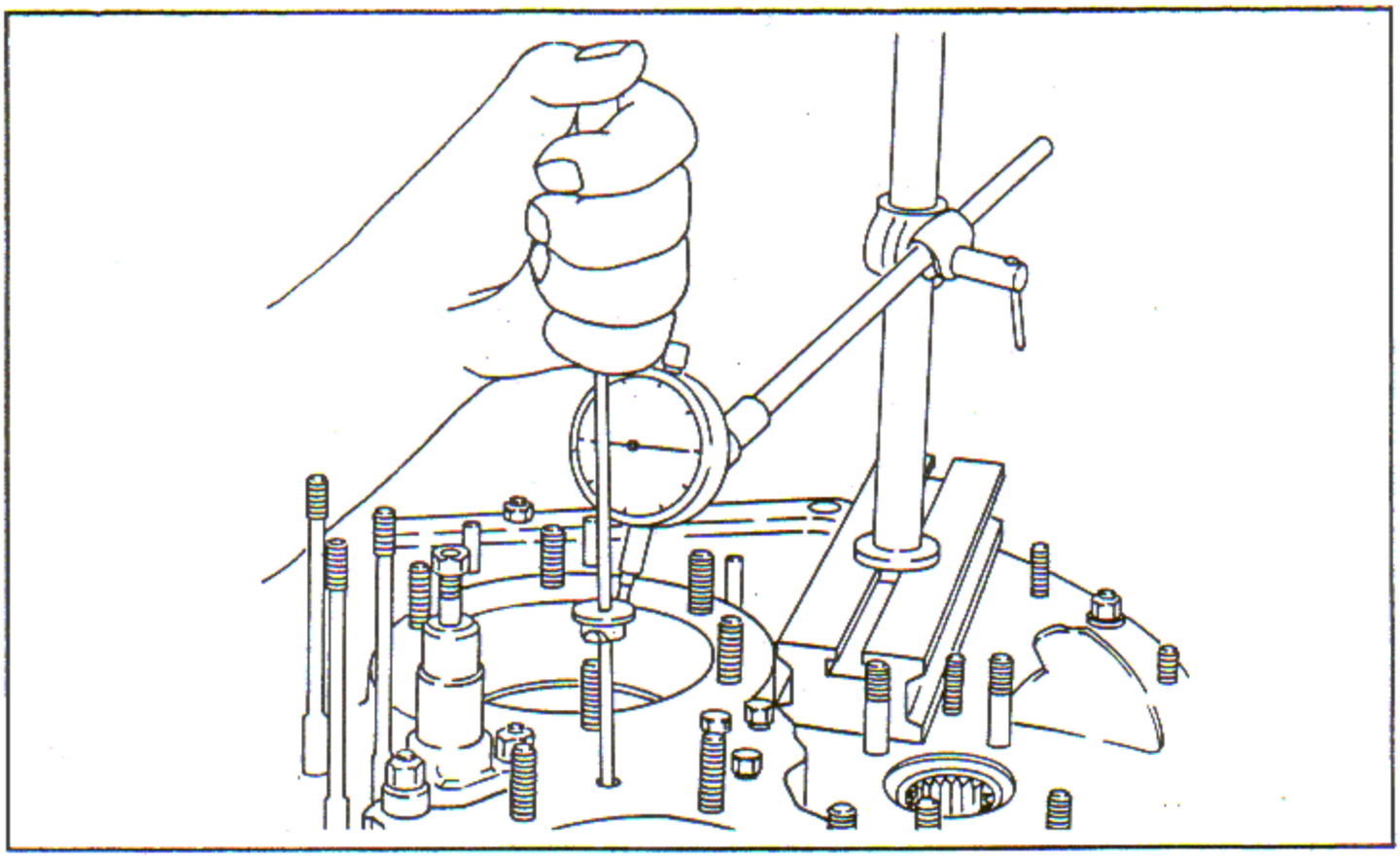

Figure 7-52. Checking End Clearance of Impeller Intermediate Drive Shaft (R1820-76 Series, -86A, -86B)

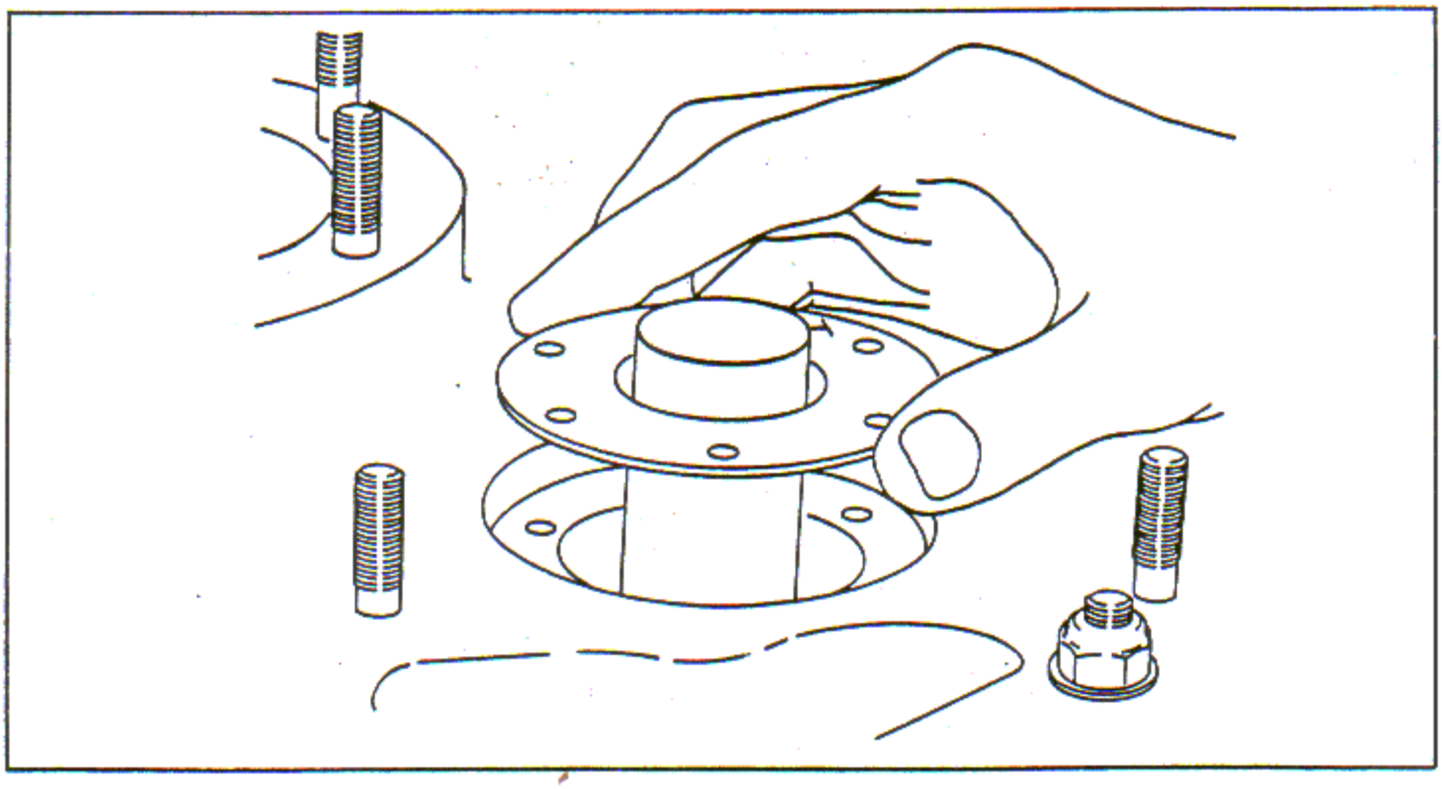

Figure 7-53. Installing Magneto Drive Gear Oil Seal

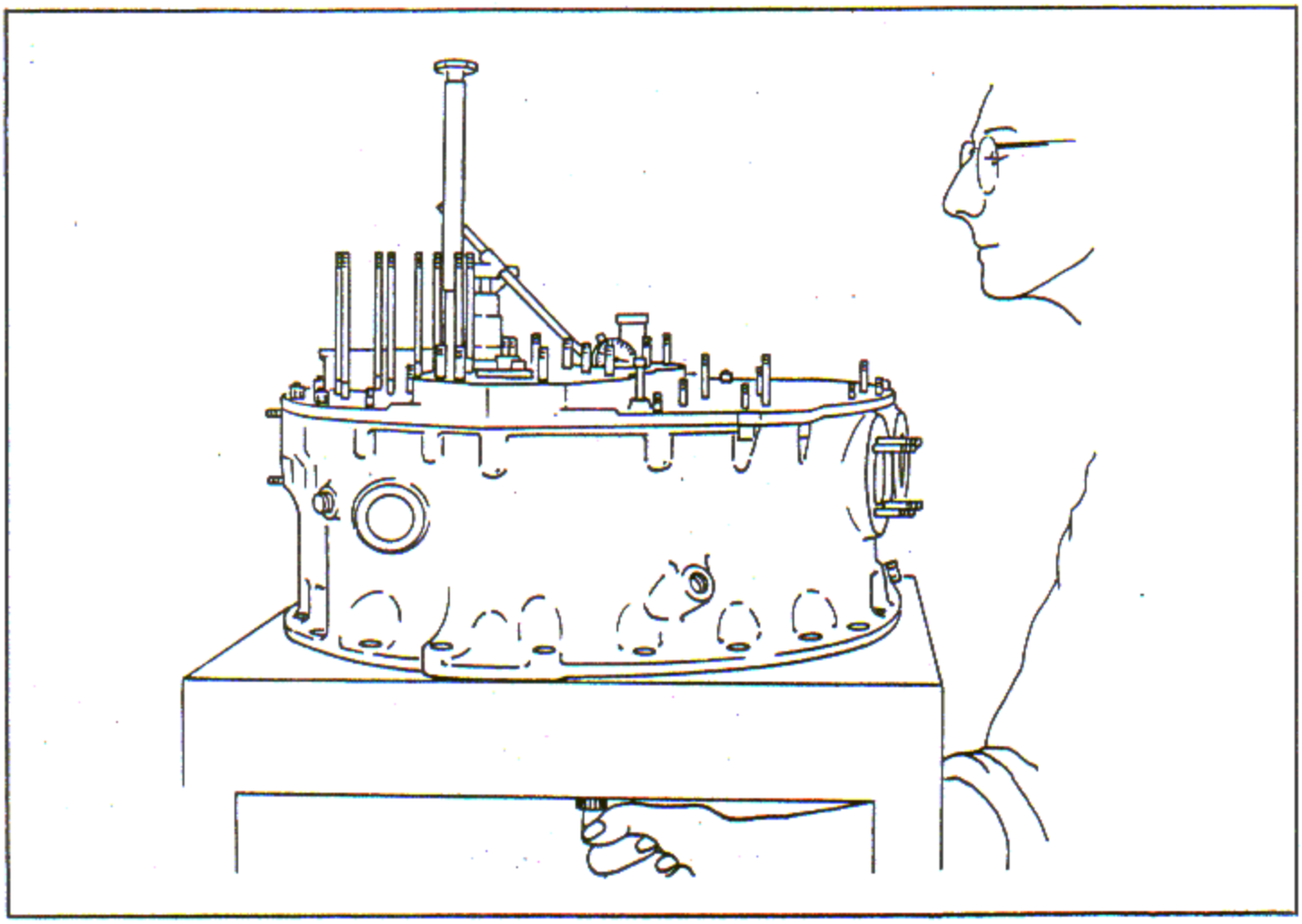

Figure 7-54. Checking End Play of Accessory Drive and Starter Shaft

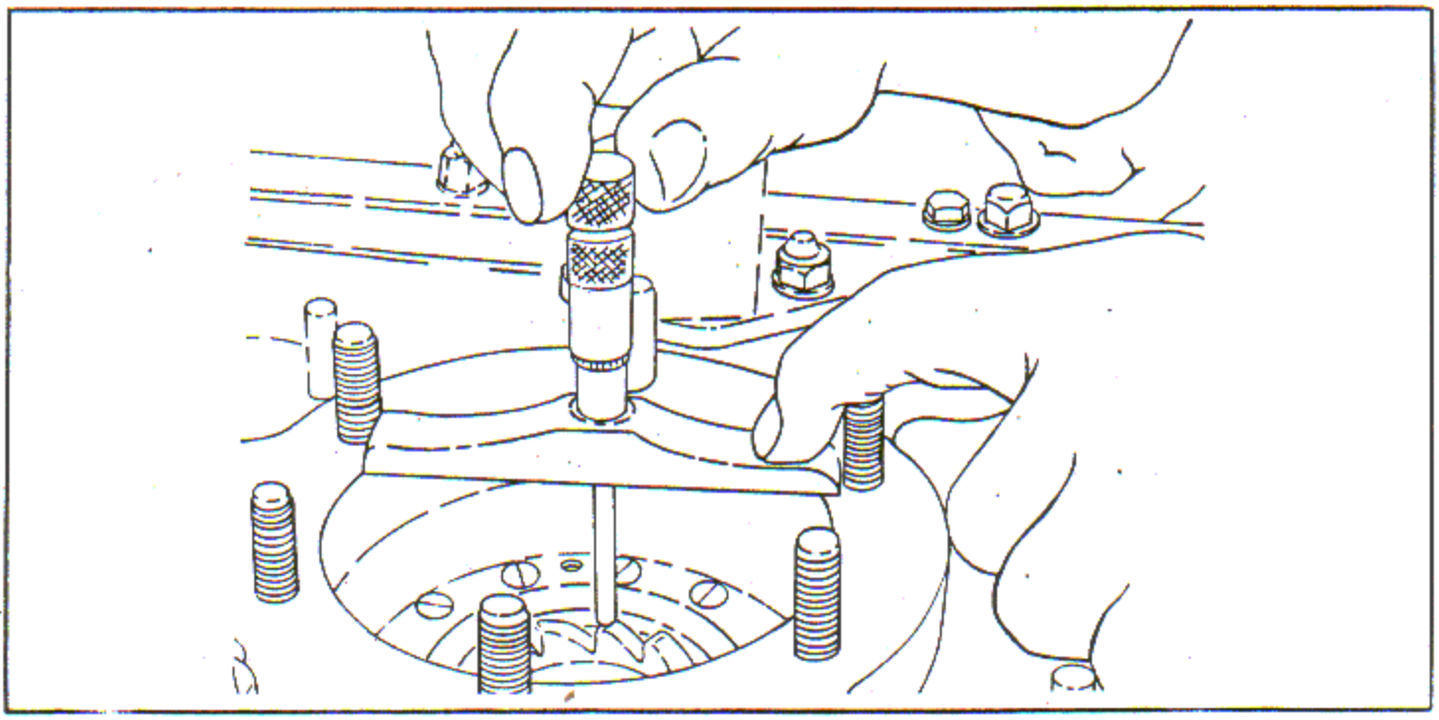

Figure 7-55. Measuring Distance from Starter Pad to Face of Starter Coupling

l. Remove the oil retaining ring, gasket, packing and coupling. Install the starter coupling spring in the ID of the spacer. Reinstall the remaining parts in their proper sequence. Fasten the oil seal packing retaining ring in place with twelve screws. Torque to 18 - 20 inch-pounds.

m. Using gage, ensure there is adequate clearance between the supercharger rear housing cover oil strainer cavity and the oil strainer.

7-56. SUPERCHARGER REAR COVER INSTALLATION (R1820-80 SERIES). (See tool groups 133 and 133A.)

a. Place a gasket on the supercharger rear housing rear parting surface and put seal rings on the oil transfer dowels on the rear cover.

b. Place bar in the generator drive gear shaft hole in the supercharger rear cover and install the cover on the supercharger rear housing. When the cover is almost down on the housing, install turning tool in the right hand magneto drive gear shaft and turn the gears until all the gears mesh and the cover drops into position. See figure 7-51.

c. Install the three rear cover to rear housing attaching screws, washers and nuts at the top of the cover. Install the rear cover to rear housing attaching bolt at the top of the cover. Install the three washers, lock washers and fiber nuts in the three holes at the bottom of the cover. Torque the fiber nuts using wrench to 125 - 140 inch-pounds. Install two puller hole substituting screws and gaskets. Leave the puller hole at the dual accessory drive housing pad empty. Install washers and nuts on the three studs at the top of the cover, the stud below the right hand magneto pad and the studs on the left side of the housing except the one beside the generator pad. Torque to 125 - 140 inch-pounds.

d. Install a gasket and attach the oil tank vent flange with washers and nuts. Torque to 125 - 140 inch-pounds.

e. Insert installing tool in each magneto drive shaft and install the magneto drive oil seal gasket and seat with the part marked "T" toward the top. Attach with six screws. Torque screws to 18 - 20 inch-pounds. See figure 7-53.

f. Install the generator drive oil seal gasket and seal with the part marked "T" toward the top. Attach with six screws and torque screws to 18 - 20 inch-pounds.

g. Check the end play of the accessory drive and starter shaft by installing a dial indicator at the rear end of the shaft and pushing the shaft up from the front. If end play is not within limits specified in reference 442, Table of Limits, Section IX, select an accessory drive and starter shaft thrust ring to obtain proper clearance. See figure 7-54.

h. Install the starter coupling spacer and the starter coupling. Install the accessory drive and starter shaft oil seal packing flat side down and retain with a gasket and retaining ring. Attach the latter temporarily with four screws equally spaced.

i. Using a depth gage measure the distance from the starter pad to the tip of a starter coupling jaw and compare with reference 450 in the Table of Limits, Section IX. If clearance is incorrect, select a starter coupling spacer to bring clearance within the limits specified. See figure 7-55.

j. Remove the ring, gasket, packing and coupling. Install the starter coupling spring in the spacer and reinstall the other parts. Attach ring with 12 screws. Torque to 18 - 20 inch-pounds.

k. Using gage, ensure there is adequate clearance between the supercharger rear housing cover oil strainer cavity and the oil strainer.

7-57. MANIFOLD ABSOLUTE PRESSURE REGULATOR SUBSTITUTING COVER INSTALLATION.

a. Install packing rings on the supercharger rear housing to manifold pressure regulator dowels.

b. Hold the gasket and the manifold absolute pressure regulator cover in position on the supercharger rear housing. Install two long capscrews (0.375 x 24 x 1.00 inch) in the top holes and torque to 275 - 300 inch-pounds. Install two short capscrews (0.313 x 24 x 0.750 inch) in the bottom holes and torque to 125 - 140 inch-pounds.

NOTE

Care must be taken that the screws are properly located to prevent interference as different thread sizes are used.

7-58. GUN SYNCHRONIZER SUBSTITUTING COVER INSTALLATION.

a. Place a gasket in position over the studs. Place an "O" ring on the pilot diameter of the cover projection.

b. Install the cover on the rear supercharger housing. Install six washers and capscrews and torque to 55 - 60 inch-pounds. Lockwire the screws.

7-59. OIL STRAINER INSTALLATION.

a. Install the "O" ring in the support. Apply a thin coat of Loctite Compound, Grade C (American Sealant Corp., Hartford 6, Conn.) or equivalent, to the mating surface flange. Assemble the support to the supercharger front housing.

CAUTION

Exercise care not to drop the packing ring into the supercharger rear housing. Retrieving a dropped packing ring necessitates disassembling the rear section.

b. Place the oil strainer gasket on the strainer mounting pad.

c. Install the oil strainer assembly into the supercharger rear section. Rotate the strainer assembly as required to align the off-set pilot on the strainer body with the recess in the supercharger rear cover.

d. Secure the oil strainer assembly with the three attaching nuts and washers. Alternately torque the nuts 80 - 85 inch-pounds.

e. Torque the cover puller screw to 75 - 100 inch-pounds. Lockwire the puller screw to the lug provided on the cover. If the lug is missing, lockwire the puller screw to one of the attaching nuts.

NOTE

The washer (3, figure 7-56) between the puller screw head and strainer covers (1) should be loose after the screw is properly torqued.

7-60. FUEL PUMP SUPPORT INSTALLATION. Place a gasket on the fuel pump support mounting pad. Install an "O" ring on the OD of the fuel pump support if the support incorporates a groove at the inner end. Insert the fuel pump support and shaft assembly carefully to mesh the helical drive gears. Place a gasket on the surface of the support and install the substituting cover. Attach with four washers and nuts and torque to 125 - 140 inch-pounds.

7-61. MAGNETIC DRAIN PLUG INSTALLATION. Locate a gasket on the magnetic drain plug adapter and install the adapter in the rear housing. Torque to 175 - 200 inch-pounds. Locate a gasket on the drain plug and screw the plug into the adapter. Torque the plug to 150 - 175 inch-pounds and lockwire it to the adjacent plug in the housing.

7-62. SUPERCHARGER DRAIN VALVE ASSEMBLY. (See tool group 127.)

a. Assemble drain valve spring (6, figure 7-57) and retainer (4) in drain valve housing (5) ensuring that the lugs on the retainer face away from the spring. Install retaining circlet (7) with lock ring installing tool. Place the circlet in the tapered bore end of tool sleeve (2, figure 7-58) and push it into place in drain valve housing (4) with tool plug (3).

b. Place one small check ball through the hole in the side of drain valve body. Hold the drain valve body right side up and look through the hole in the center of the body to ensure that the ball has dropped into its seat. Insert the second check ball and install the retaining screw. Shake the assembly to ensure that the balls are free to rattle. Insert the small end of return tube into the valve body. Use a fiber mallet to seat the tube. Install the two seal rings in the groove on the small end of the drain valve body. Lubricate the rings with JAN-A-669 anti-seize compound.

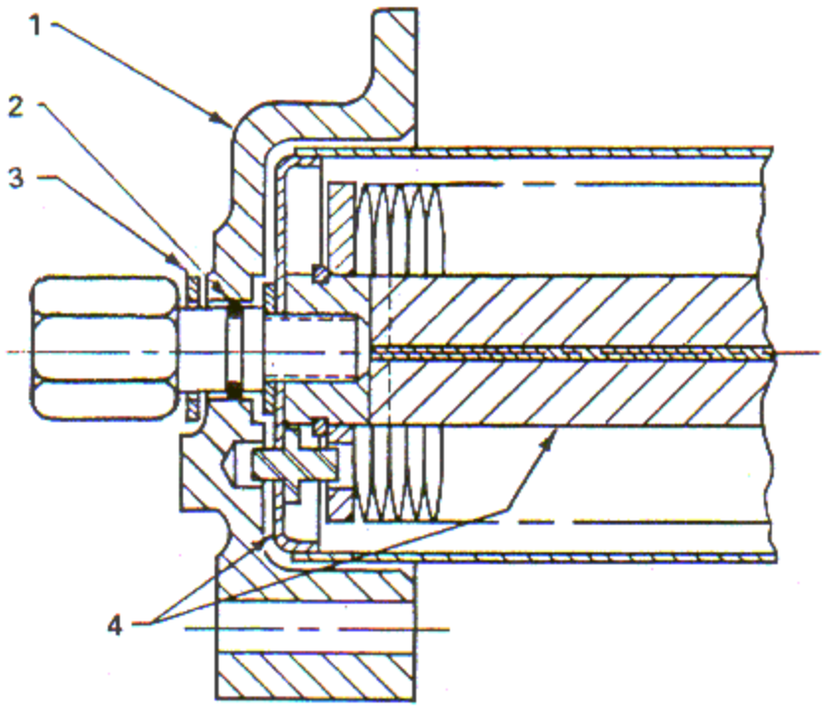

1. STRAINER COVER
2. "O" RING SEAL
3. LOOSE WASHER (PROTECTS COVER FROM DAMAGE)
4. STRAINER HOUSING AND ELEMENT ASSEMBLIES, SECURED BY A PULLER SCREW, FLOAT AS A UNIT IN STRAINER COVER

Figure 7-56. Puller Screw Washer, Head and Strainer Cover Location

7-63. Installation.

a. Install a washer on the drain valve body and install it in the supercharger rear housing. Use a suitable socket wrench and torque to 215 - 240 inch-pounds.

b. Install packing ring on the shoulder of the drain valve body. Lubricate the ring with Federal Specification TT-A-580a anti-seize compound. Place piston and disc assembly on the end of the drain valve body and install drain valve housing. Tighten the housing with a suitable socket wrench. Torque to 50 - 60 inch-pounds.

7-64. REAR OIL PUMP INSTALLATION. (See tool groups 41, 87 and 116.)

a. Lubricate the splines of the oil pump drive coupling and drive gear as instructed in paragraph 7-2, step j. Install the oil pump drive gear spring on the shaft of the gear. Place a gasket on the oil pump mounting pad and install the pump. Install the two oil pump retaining nuts and washers on the short mounting studs (R1820-80 Series, -86A and -86B only). Install the eight oil pump and cover retaining nuts and washers. Using wrench, torque the nuts to the value specified in reference 911, Table of Limits, Section IX. Install a washer and nut on the stud at the lower right of the pump. Tighten the nuts with wrench. See figure 7-59. Tighten the foot nut with wrench and a suitable torque wrench. See figure 7-59. Torque the nuts to the value specified in reference 912, Table of Limits, Section IX, and lockwire.

b. Install the tachometer drive shaft gear oil seal ring retainer in the oil pump cover, with the three lugs up or to the rear. Place an oil seal ring under

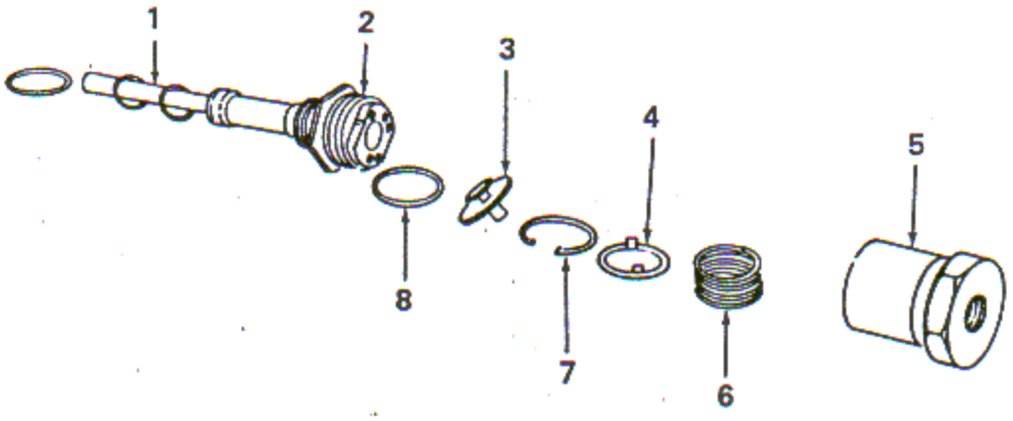

1. TUBE ASSEMBLY
2. VALVE BODY
3. PISTON AND DISC
4. SPRING RETAINER
5. DRAIN VALVE HOUSING
6. SPRING
7. CIRCLET
8. PACKING RING

Figure 7-57. Supercharger Drain Valve Assembly

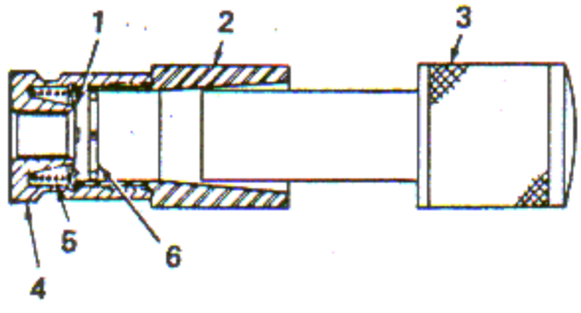

1. RETAINER
2. SLEEVE, DETAIL OF TOOL
3. PLUG, DETAIL OF TOOL
4. VALVE HOUSING
5. SPRING
6. CIRCLET

Figure 7-58. Supercharger Drain Valve Circlet Installation

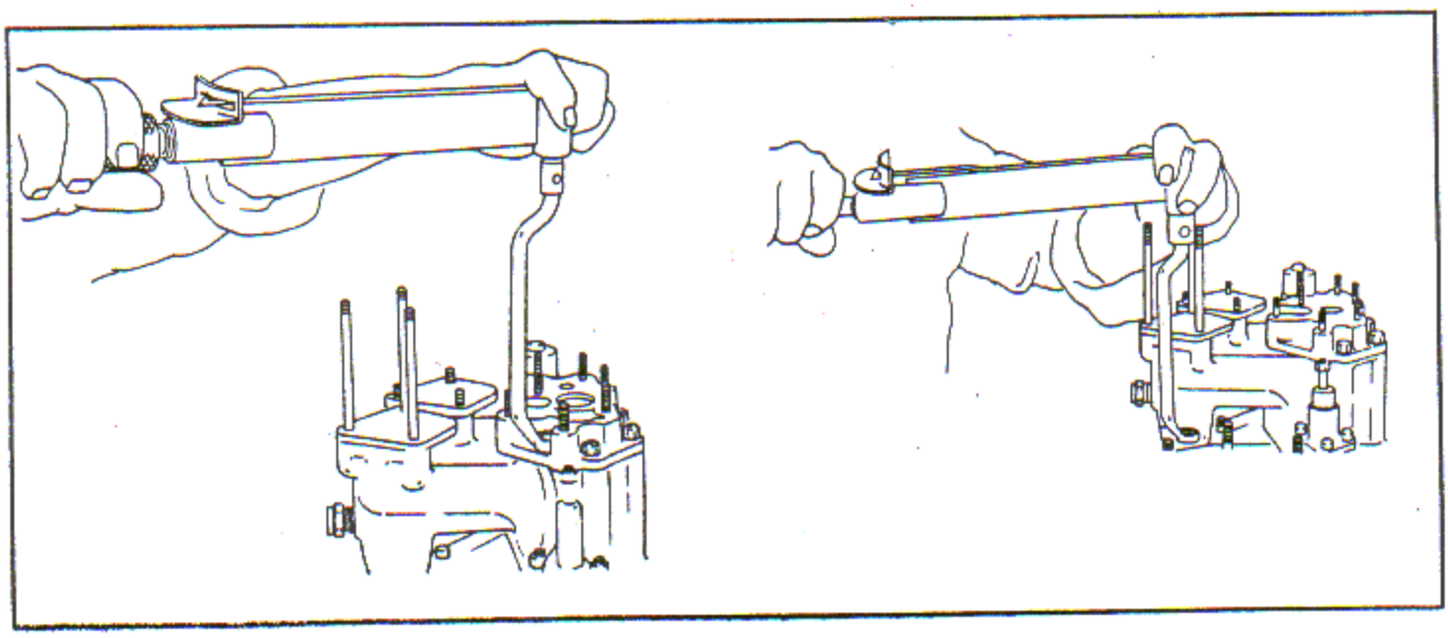

Figure 7-59. Torquing Oil Pump to Supercharger Rear Cover Nuts and Foot Nut

the flange below the gear and install the gear so that the slots mate with the lugs in the oil seal ring retainer.

c. Place the tachometer drive shaft intermediate gear in the center hole in the tachometer drive shaft gear housing. Place the tachometer drive shaft single row and double row gears in the housing. Install a gasket and install the housing on the oil pump cover. Secure the housing with seven washers and nuts. Torque nuts to 80 - 85 inch-pounds.

d. Place a gasket on the tachometer drive housing. Insert installing tool (1, figure 7-60), in each of the tachometer drive gears to guide the oil seals over the shafts. Install the tachometer drive shaft gear housing cover. Attach the cover with two washers and nuts. Torque to 80 - 85 inch-pounds.

e. Place a gasket on each of the tachometer mounting pads and attach the substituting covers with eight washers and nuts. Torque to 80 - 85 inch-pounds.

7-65. DUAL ACCESSORY DRIVE ASSEMBLY. (See tool groups 38 and 39.)

a. Place the proper gasket on the rear cover and install the dual accessory drive housing over the attaching studs on the rear cover. Hold the housing up from the cover, install washers over the two studs located under the housing flange and start a plain nut over the stud in the corner of the housing and a slotted nut over the other stud. Install a washer and a slotted nut on the stud in the center of the housing and a washer and a plain nut on the stud at the other end of the housing. Use a washer and an extended nut on the parting surface of the housing. See figure 7-61. Install washers and two acorn nuts on the housing studs that extend through the rear cover and the rim of the rear housing.

b. Torque the plain nuts inside the housing and extended nut on the parting surface to 80 - 85 inch-pounds using wrench B. Torque the slotted nuts to 70 - 95 inch-pounds, using wrench A. Lockwire the nuts under the flange together; lockwire the other plain nut to a hole in the housing; secure the center slotted nut with a cotter pin; lockwire the extended nut on the parting surface to a hole in the housing; lockwire the acorn nuts together.

c. Install the dual accessory drive idler gear assembly and intermediate gear and shaft. Install the two accessory drive gears.

d. Put a gasket on the parting surface of the housing and place an installing tool in each of the two drive gears to guide the oil seals over the shafts. Install the cover on the housing. Use a washer and nut on the stud at the right side of the cover. Use washers and extended nuts on the

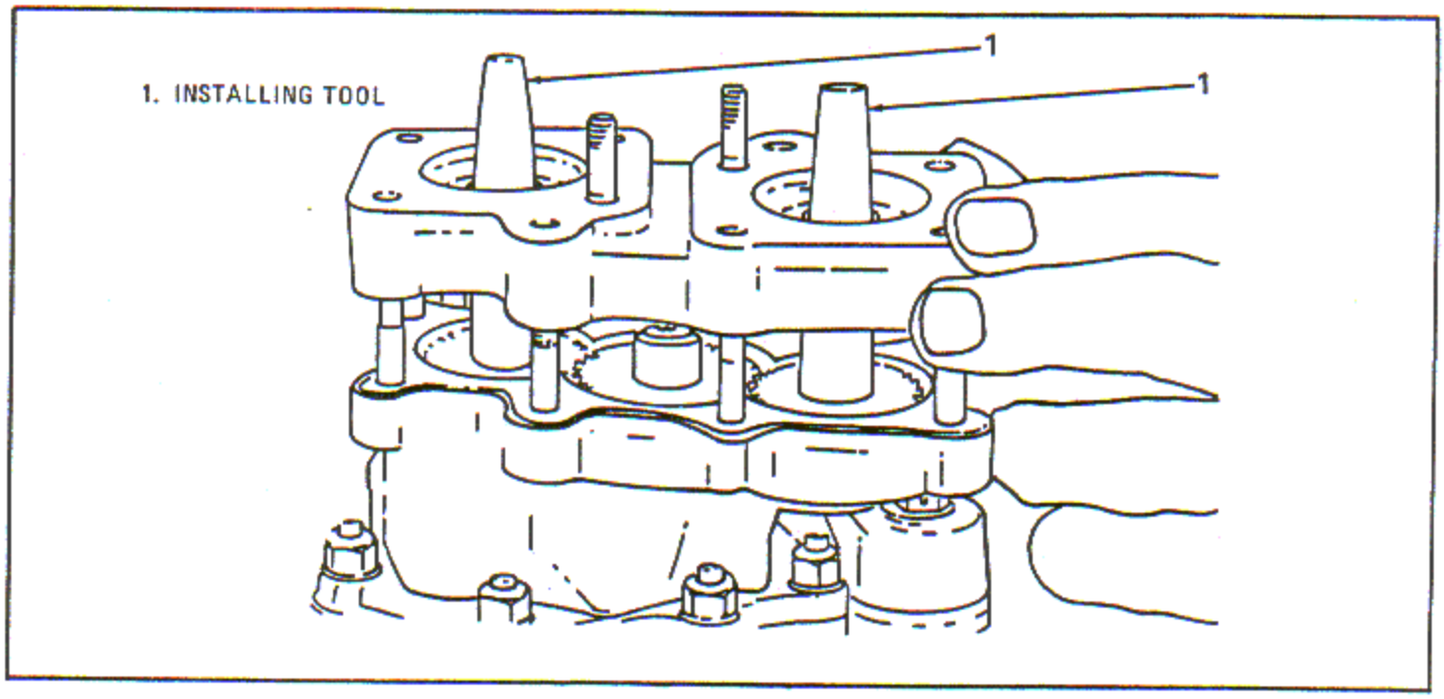

Figure 7-60. Installing Tachometer Drive Shaft Gear Housing Cover

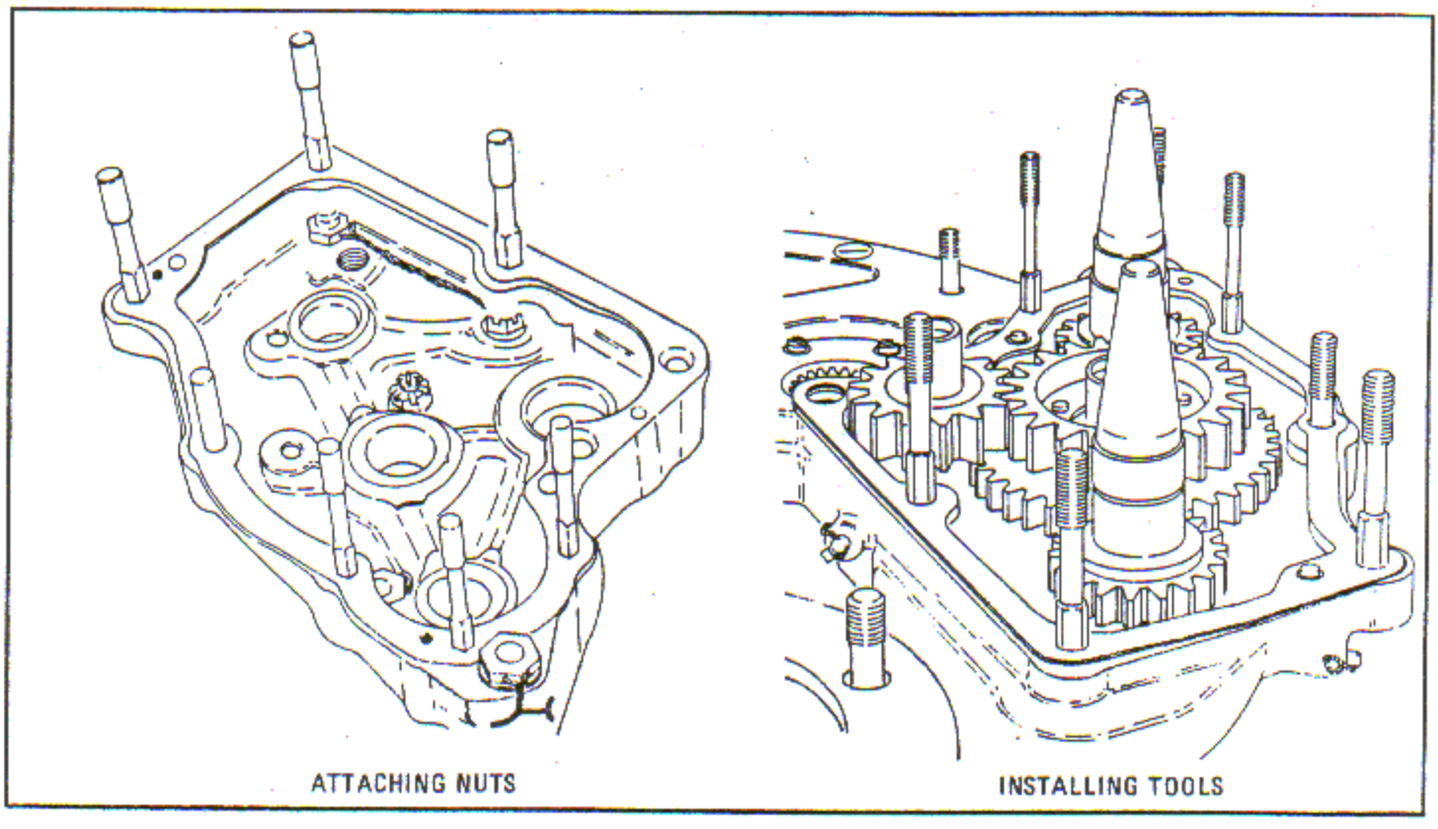

Figure 7-61. Dual Accessory Drive Housing Attaching Nuts and Cover Installing Tools in Place.

two studs near the top of the housing. Torque to value specified in reference 929, Table of Limits, Section IX, and lockwire. Install gaskets and substituting covers on the two accessory drive pads. Attach with eight washers and fiber lock nuts. Torque to value specified in reference 930, Table of Limits, Section IX.

7-66. SUBSTITUTING COVERS INSTALLATION. (See tool group 55.)

7-66A. Install the generator and starter substituting covers with gaskets. Secure the starter substituting cover with plain washers and self-locking hex nuts. Secure the generator substituting cover with self-locking double hex (12-point) nuts with integral washers (washers securely attached to the nuts but free to rotate). Tighten the starter substituting cover nuts with a 9/16 inch box wrench, and the generator substituting cover nuts with a 7/16 inch, 12-point box wrench.

7-67. SUPERCHARGER FRONT HOUSING ASSEMBLY. (See tool groups 18 and 129.)

7-68. INSTALL IMPELLER SHAFT SUPPORT.

a. If the impeller shaft support has been removed, install the "O" ring in the support. Apply a thin coat of Loctite Compound Grade C, (American Sealant Corp., Hartford 6, Conn.) or equivalent, to the mating surface flange. Assemble the support to the supercharger front housing.

b. Apply Loctite compound to the underside of the head and threads of the attaching screws. Install the screws through the housing into the support. Torque the screws to 50 - 70 inch-pounds. Remove any excess Loctite compound.

CAUTION

Do not exceed the maximum torque limit, as stretching of the screws may result.

7-69. PRESSURE TEST IMPELLER SHAFT SUPPORT.

a. Place the supercharger front housing assembly on base of fixture. Screw the fixture sealing cap in place at the front support location to form an air tight seal for air testing the supercharger front housing impeller shaft bearing support attaching screws.

b. Install a locally fabricated rubber plug in the oil hole.

c. Air pressure test the housing assembly under water at 10 psi. No leakage is permitted.

NOTE

The use of soap solution or oil without submersion is permissible.

7-70. ASSEMBLY.

a. Place the supercharger front housing on compressor shown in figure 7-62. Position the attaching screw head against the flat button of the compressor jaw.

b. Assemble the compressor jaw and bolt to the compressor, locating the compressor pin in the hollow end of the attaching screw. Tighten the knurled knob and bolt to secure the compressor jaw firmly in position.

c. Attach a suitable hydraulic pump (RC-426 ram with P-182 hydraulic pump and Z-721 attachments, Blackhawk Mfg. Company, 5325 W. Rogers Street, Milwaukee 46, Wisconsin, or equivalent) to the compressor and set the relief valve to by-pass at 2500 psi pressure. Apply 2500 psi pressure to lock the screws.

d. Release the pressure, loosen the knob and reposition the supercharger front housing at the next screw to be locked. Repeat steps b and c for each attaching screw.

e. Remove the housing from the compressor.

f. Install the intake pipe packing and ring in the ports of the supercharger front housing and screw in the nuts finger tight. Install covers on the nuts.

g. Replace any core hole plugs which were removed.

h. Install a packing ring and attach the breather or a substituting cover by installing and torquing two washers and nuts on the breather flange to 125 - 140 inch-pounds. Cover the sump attaching pad and the oil passage at the lower rear of the housing with covers.

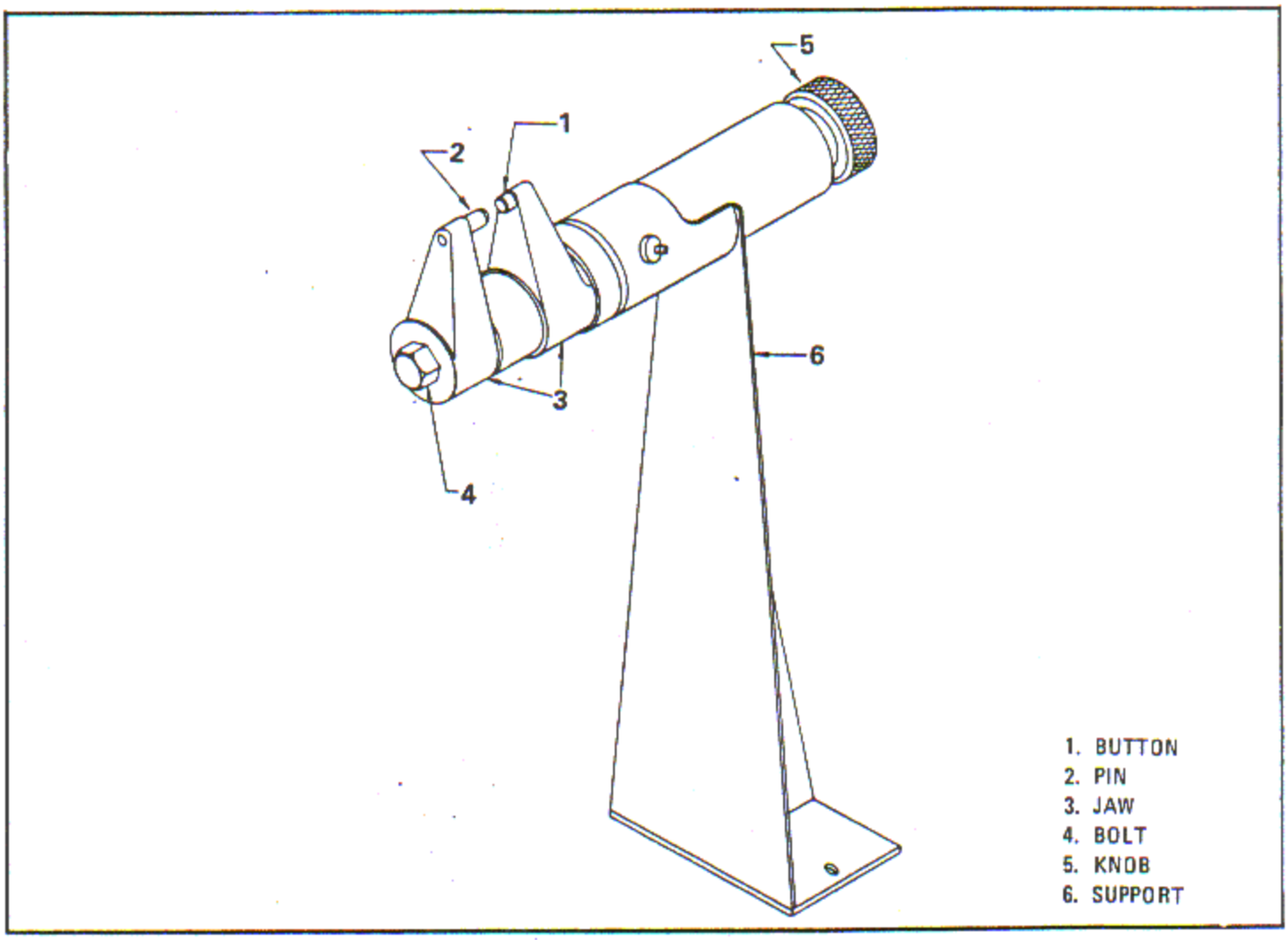

Figure 7-62. Compressor, Impeller Shaft Bearing Support Attaching Screws

i. Place the supercharger front housing front face up on a work bench. Install an oil seal ring on the front parting surface and install an oil seal ring in each of the three counterbored crankcase main section attaching bolt holes.

NOTE

A supercharger front housing which has been reconditioned to clean up the mounting face, as instructed in paragraph 6-570, requires the use of a steel shim if either 0.010 or 0.020 inch of material was removed. Ensure that reconditioned housings are assembled with the appropriate shim.

j. Position the crankcase rear main section on the supercharger front housing. Turn the assembly over. Install the eighteen attaching screws and washers. Ensure that packing rings are used on the two attaching screws at the breather location and the screw through the right sump leg attaching port. Torque the attaching screws to 425 - 450 inch-pounds using wrench and torque wrench. See figure 7-63. Lockwire screws in pairs.

7-71. FRONT OIL SUMP AND PUMP ASSEMBLY.

a. Install the front oil pump drive gear so that the splined end projects through the bushing in the pump body. Install the mating driven gear.

b. Place a gasket on the flange of the pump cover and lower the body and gears onto the cover. Align the dowel hole in the body and cover.

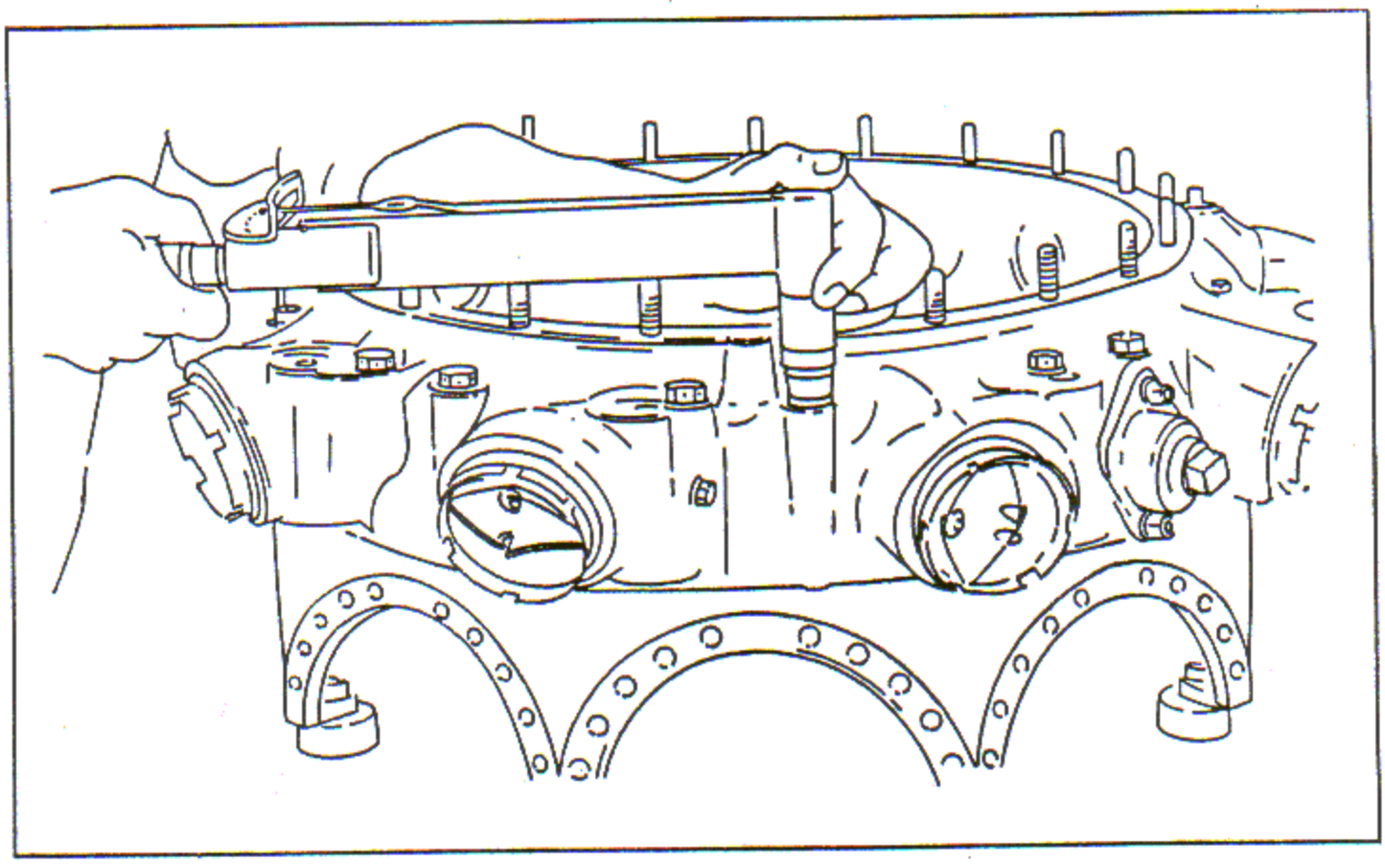

Figure 7-63. Torquing Supercharger Front Housing to Crankcase Rear Main Section Bolts

c. Check end clearance of the gears to be within the limits specified in reference 81, Table of Limits, Section IX, by inserting a feeler gage through the port in the pump body. See figure 7-64.

d. Place a gasket over the studs on the pump attaching flange of the sump.

e. Install the pump assembly in the oil sump, aligning the stud and pin holes properly. Secure with seven washers and fiber lock nuts. Torque to 125 - 140 inch-pounds.

f. Insert the oil sump strainer. Ensure that it is properly seated. Install a gasket and "O" ring on the chip detector plug adapter and screw it in against the strainer. Tighten the adapter using a suitable socket and torque wrench. Install the gasket and "O" ring on the chip detector plug and screw it into the adapter. Tighten the plug and lockwire it to the tab on the sump casting.

7-72. IGNITION MANIFOLD INSTALLATION. (See tool group 61.)

a. If, during removal or repair of the ignition manifold, the magneto elbow and terminal block were removed, reinstall in the following manner.

b. Place the ignition leads through the magneto elbow. Insert ignition lead puller through the terminal block. See figure 2-12. Screw the lead pullers on the ends of each magneto terminal stud ensuring that each stud is in its respective position.

c. Push the terminal block into position in the elbow and draw the pullers out until each stud is in

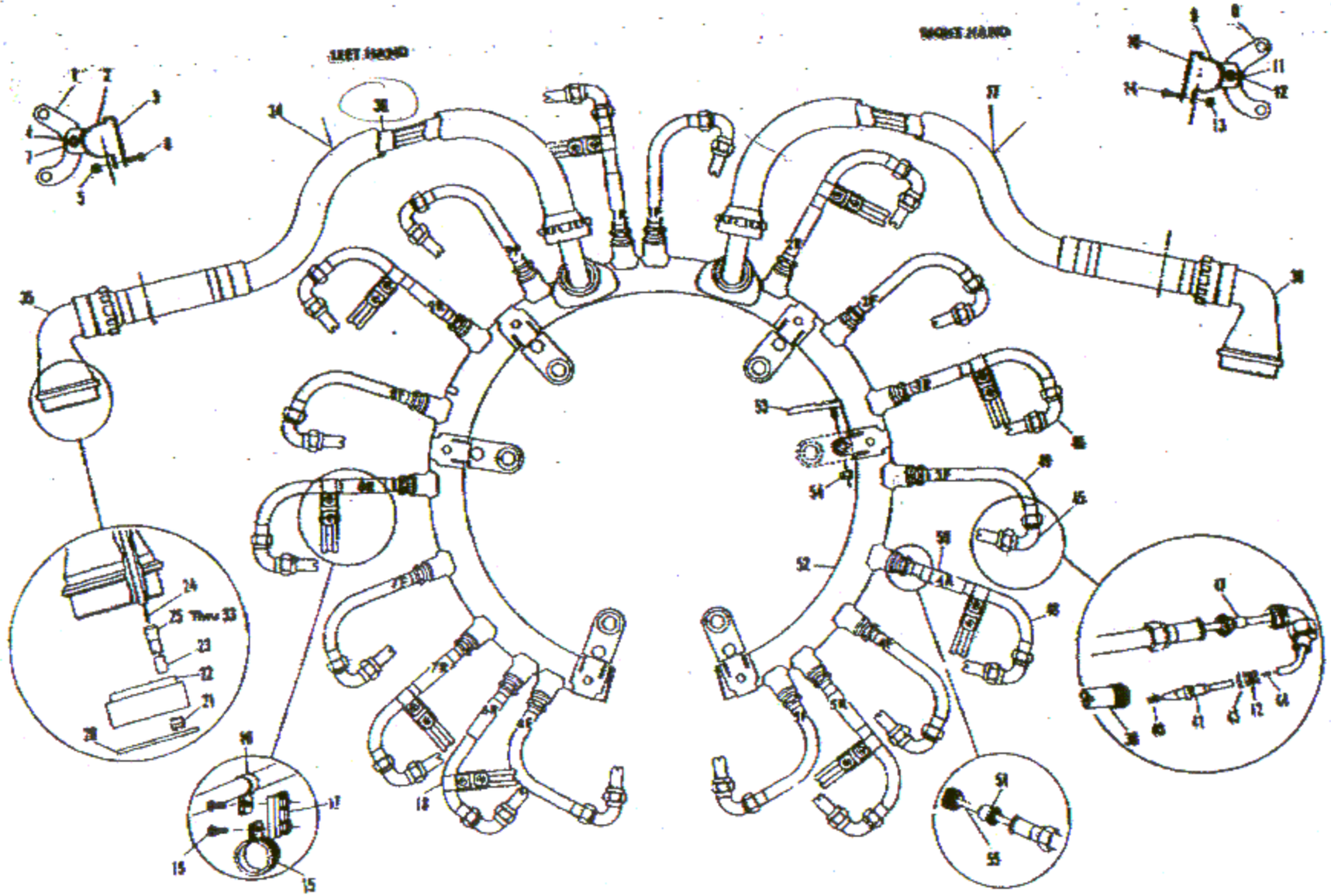

Figure 6. Ignition Harness R1820-768/86/86A Engine.

FIGURE & INDEX NO.	PART NO.	1 2 3 4 5 6 7 DESCRIPTION	UNITS PER ASSY	USABLE ON CODE
		R1820-76B/86/86A ENGINE IGNITION HARNESS	1	
		IGNITION HARNESS, 3/4-20 spark plugs		
R-	31098	IGNITION HARNESS, 5/8-24 spark plugs	1	
	31090	. BRACKET ASSEMBLY, Mag conduit, L.H.	1	
	36612	. CLAMP ASSEMBLY, Mag conduit, L.H.	1	
-1	36614	. BRACKET, Mag conduit, L.H.	1	
-2	36619	(ATTACHING PARTS)		
-3		. NUT, Self-locking, steel, cd. pl. 1/4-28NF3	1	
	AN365-428A	. NUT, Self-locking, steel, cd. pl. 10-32NF2	1	
-4	AN365-1032A	. SCREW, Machine, steel, cd. pl. 10-32NF2	1	
-5	AN520-10R10	. WASHER, Plain, for 1/4" screw, cd. pl.	1	
-6	AN960-416			
-7				
		. BRACKET ASSEMBLY, Mag conduit, R.H.	1	
	36613	. CLAMP ASSEMBLY, Mag conduit, R.H.	1	
-8	36615	. BRACKET, Mag conduit, R.H.	1	
-9	36619	(ATTACHING PARTS)		
-10		. NUT, Self-locking, steel, cd. pl. 1/4-28NF3	1	
	AN365-428A	. WASHER, Plain, for 1/4" screw, cd. pl.	1	
-11	AN960-416	. NUT, Self-locking, steel, cd. pl. 10-32NF2	1	
-12	AN365-1032A	. SCREW, Machine, steel, cd. pl. 10-32NF2	1	
-13	AN520-10R10			
-14				
		. CLAMP, Pushrod	9	
	36641	. CLAMP, Conduit, spark plug, R.H. twist	8	
-15	23161	. BRACKET ASSEMBLY, Clamp, conduit	9	
-16	37665	. CLAMP, Conduit, spark plug, L.H. twist	1	
-17	37666	(ATTACHING PARTS)		
-18		. SCREW, Machine, steel, cd. pl. 10-32NF2	18	
	AN520-10R7			
-19				
		. RING, Snap, magneto elbow	2	
	25393	. NUT, Terminal, 3-48NC2	18	
-20	36042	. BLOCK, Terminal insulation, mag elbow	2	
-21	25399	. SLEEVE, Terminal, 5mm	18	
-22	22883	. STUD, Terminal, S.S. 3-48NC2 x 19/32" lg	18	
-23	23499	. MARKER, Cable 7mm (TF 21215)	2	
-24	AN4028-7-1	. MARKER, Cable 7mm	2	
-25	AN4028-7-2	. MARKER, Cable 7mm	2	
-26	AN4028-7-3	. MARKER, Cable 7mm	2	
-27	AN4028-7-4	. MARKER, Cable 7mm	2	
-28	AN4028-7-5	. MARKER, Cable 7mm	2	
-29	AN4028-7-6	. MARKER, Cable 7mm	2	
-30	AN4028-7-7	. MARKER, Cable 7mm	2	
-31	AN4028-7-8	. MARKER, Cable 7mm	2	
-32	AN4028-7-9	. CONDUIT ASSEMBLY, Manifold to magneto, L.H.	1	
-33	36624	. ELBOW, Magneto, L.H.	1	
-34	36503	. SLEEVE, Chafing, rubber comp, 21/32" I.D. x 29/32" O.D.	6	
-35	36513			
-36		. CONDUIT ASSEMBLY, Manifold to magneto, R.H.	1	
	36623	. ELBOW, Magneto, R.H.	1	
-37	36502	. PROTECTOR, Terminal, spark plug	18	
-38	37695	. SPRING & EYELET, Terminal, 3-48NC2	18	
-39	AN4164-22	. SLEEVE, Terminal, 5mm cable	18	
-40	57163	. SPRING	18	
-41	25573	. WASHER	18	
-42	25574	. STUD, Terminal, S.S. 3-48NC2 x 1 1/32" lg	18	
-43	23499	. ELBOW, 70 deg. angle	9	
-44	38979	. ELBOW, 90 deg. angle	9	
-45	38980	. GROMMET, Spur type, 5mm	18	
-46	24978	. CONDUIT ASSEMBLY, All rear cyl nos	9	
-47	2206-2308	. CONDUIT ASSEMBLY, All front cyl nos	9	
-48	2206-904	. SLEEVE, Chafing, rubber comp	9	
-49	36574	. GROMMET, Spur type, 5mm	18	
-50	23178	. MANIFOLD ASSEMBLY, Ignition harness	1	
-51	36383	. BRACKET ASSEMBLY, Manifold	6	
-52	24736	(ATTACHING PARTS)		
-53		. NUT, Self-locking, steel, cd. pl. 7/16-24NF3	6	
	AN365-524A			
-54				
		. CABLE, Hi-ten, 5mm Spec. No. MIL-C-8817 (ASG)	126'	
	22041			
-55				

RADIAL AIRCRAFT ENGINES

FAX MESSAGE.

: 17 Feb 94

er of Pages 1

al Aircraft Engines.
Box 165,
ERFIELD. Qld. 4108.
RALIA.

From: Dennis Riles

07 875 1508
07 277 0345

International Fax: 61 7 277 0345

CARL SKINNER Co. ATTN Bruce

ge:

STALLATION OF THE MODIFIED KNUCKLE PIN BOLTS
LIBES THE USE OF CRIMPING TOOL PN 810600

WE DO NOT HAVE THIS TOOL. COULD YOU KINDLY
DETAILS AND/OR ILLUSTRATIONS SO THAT
CAN MAKE OR MODIFY AN EXISTING TOOL.

WE EARLY REPLY WOULD BE MOST APPRECIATED

REGARDS
DENNIS.

SE A NARROW PUNCH OR CHISEL
ND HIT THE HELL OUT OF IT WITH A
HAMMER

Bruce

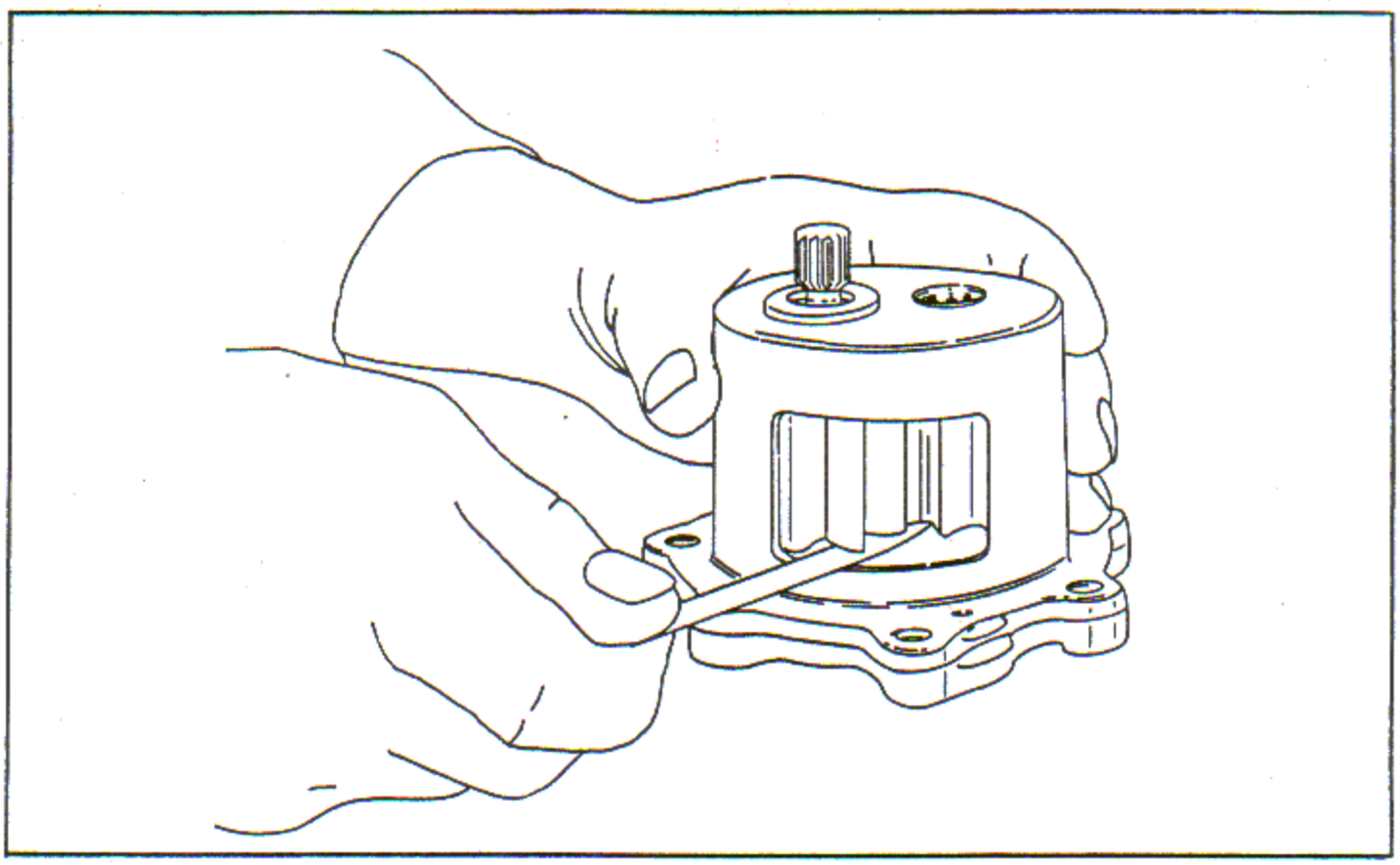

Figure 7-64. Checking End Clearance of Front Oil Pump Gears

its proper place in the block. Remove the pullers from each terminal stud and install the terminal nut.

d. Position the snap ring in the groove of the elbow, ensuring that the ring is fully seated.

NOTE

If the terminal stud is damaged, remove and replace it with a new stud. Use a suitable crimping tool to secure the stud to the wire.

SECTION VIII
ENGINE
FINAL ASSEMBLY

8-1. GENERAL.

8-2. For general assembly procedure instructions refer to paragraph 7-2. For instructions governing lockwireing methods, refer to paragraph 7-5. For instructions governing torques, limits, and the use of torque wrench extensions refer to Section IX. For instructions governing lubrication of all external engine driven accessory drive splines prior to installation, refer to paragraph 7-2, step j.

8-3. SUPERCHARGER FRONT HOUSING TO ENGINE ASSEMBLY STAND INSTALLATION. (See tool group 42.)

a. Install the supercharger front housing and crankcase rear main section as a unit in engine assembly stand.

b. Insert bolts that secure the assembly to the stand and secure with nuts and washers.

8-4. CRANKSHAFT AND MASTER ROD ASSEMBLY INSTALLATION. (See tool group 23.)

a. Coat the rear main bearing with clean engine lubricating oil.

b. Install eye A in the master rod and attach a chain hoist. Apply tension to the hoist and release the crankshaft stand clamps. Raise the crankshaft assembly from the stand. Remove the bushings from the front end of the crankshaft, install eye B and attach a chain hoist. See figure 8-1.

c. Lower the hoist on the master rod and raise the hoist on the crankshaft until the crankshaft front end is vertical. Remove the hoist eye from the master rod. Lower the crankshaft assembly into position in the crankcase rear main section with the master rod in No. 1 cylinder position. See figure 8-2.

d. Heat the inner race of the front main bearing in oil to 121°C (250°F) for five minutes. Install the inner race over the crankshaft front end with the flanged end toward the rear. Tap the race lightly with a fiber drift to seat it. Check with a 0.001 inch feeler gage between the bearing race flange and the crankshaft to ensure proper seating. Install the bearing rollers, cage and outer race. Coat the bearings with clean engine lubricating oil.

NOTE

Ensure that the bearing has a minimum residual internal radial looseness of 0.0005 inch. Check the bearing for adequate cage clearance. Refer to table 6-7, page 6-29.

8-5. CRANKCASE FRONT MAIN SECTION INSTALLATION. (See tool groups 15, 18 and 19.)

a. Install sling on the crankcase front main section and attach a suitable hoist. Raise the front main section, remove the protectors and clean the parting surfaces.

b. Clean the rear main parting surfaces and coat with sealing compound. Install oil seal packings in the grooves.

c. Lower the crankcase front main section onto the crankcase rear main section.

NOTE

Do not disturb the cam and second order balanceweight mechanism as applicable.

d. Install the crankcase main section attaching bolts from the rear section forward and secure them with nuts and washers.

e. Hold, tighten and torque, with the applicable wrenches and torque wrench, the nuts to the value specified in reference 907, Table of Limits, Section IX. Secure the nuts with cotter pins.

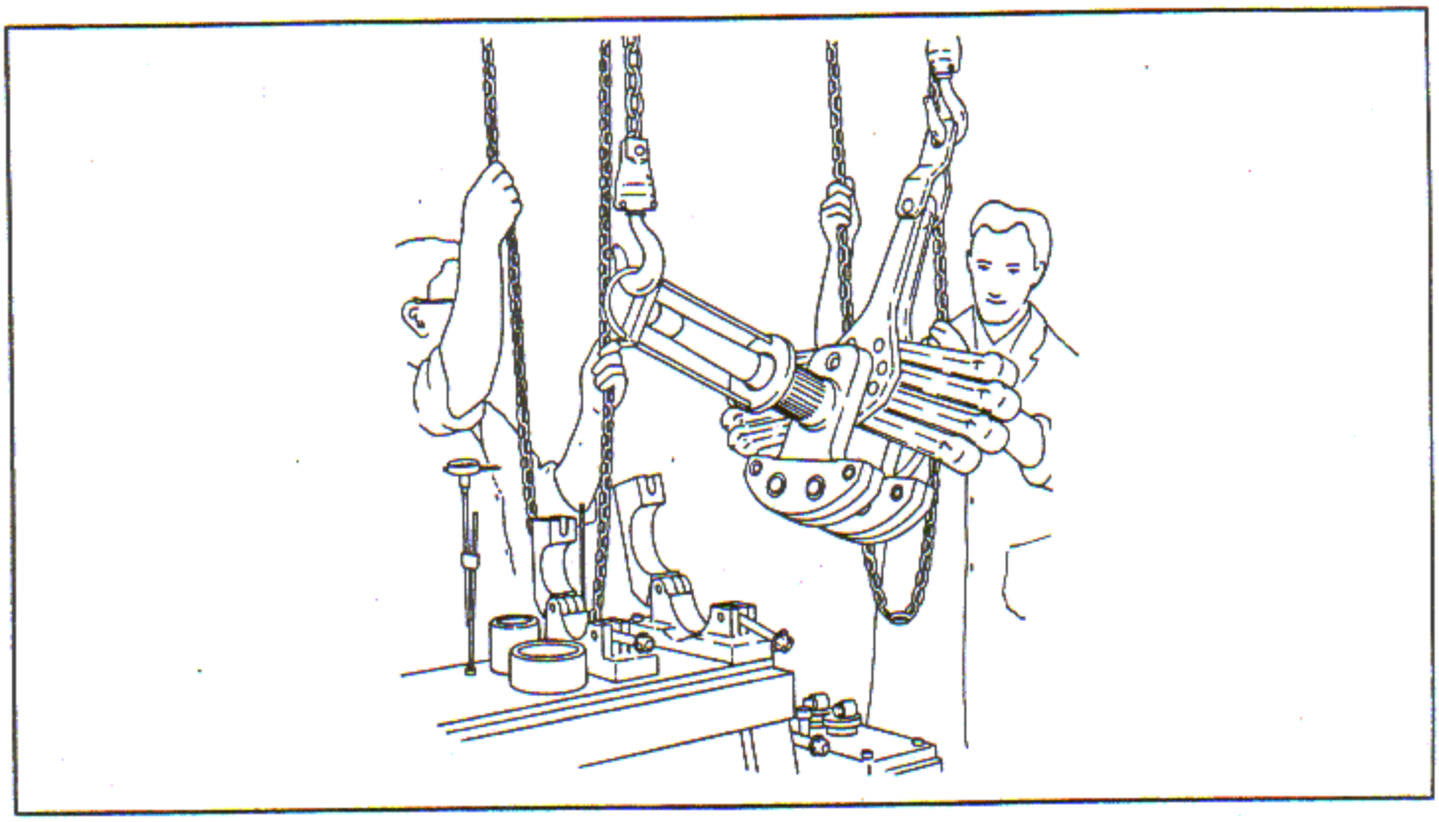

Figure 8-1. Raising Crankshaft Assembly from Stand

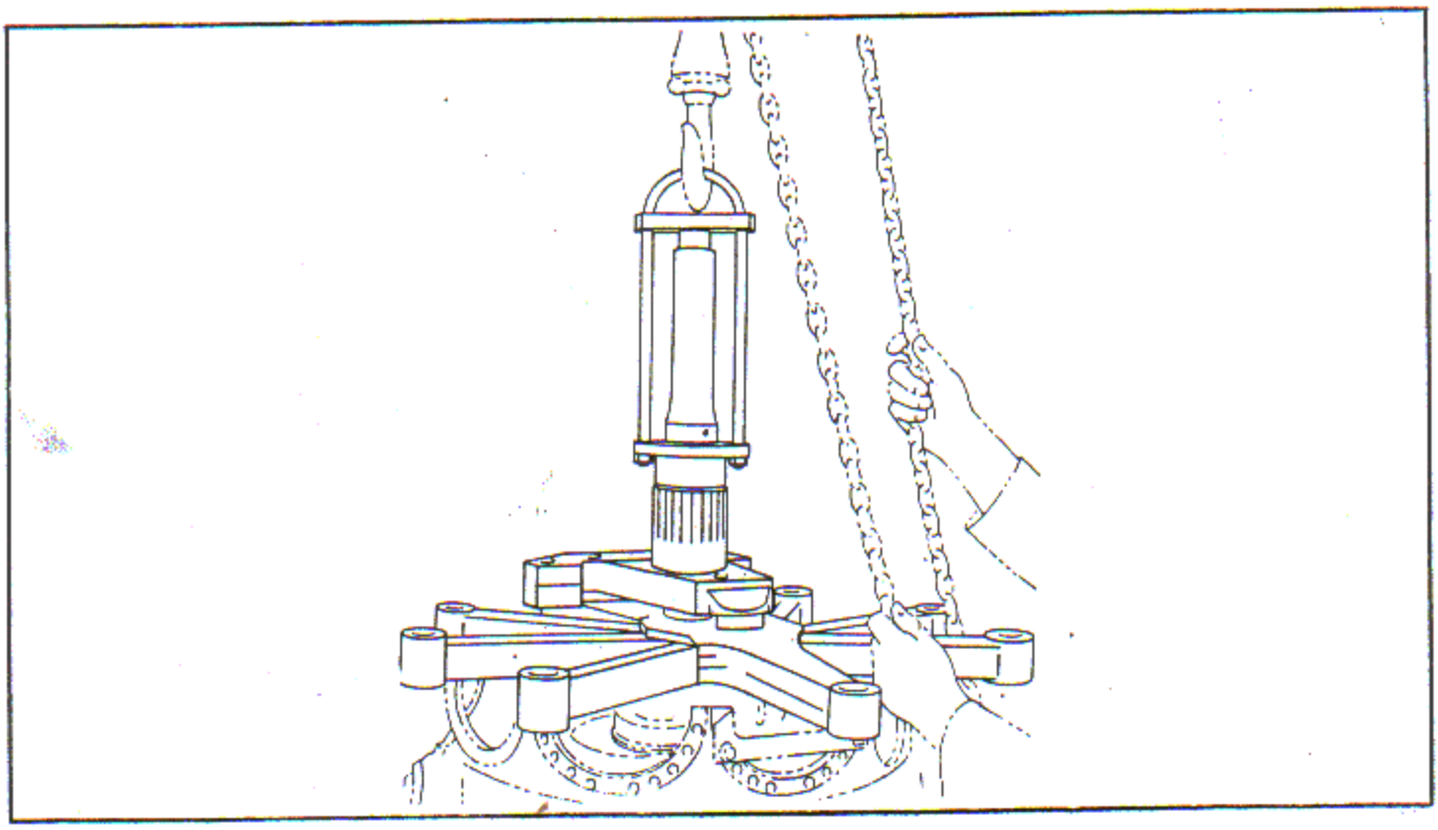

Figure 8-2. Lowering Crankshaft Assembly into Crankcase Rear Main Section

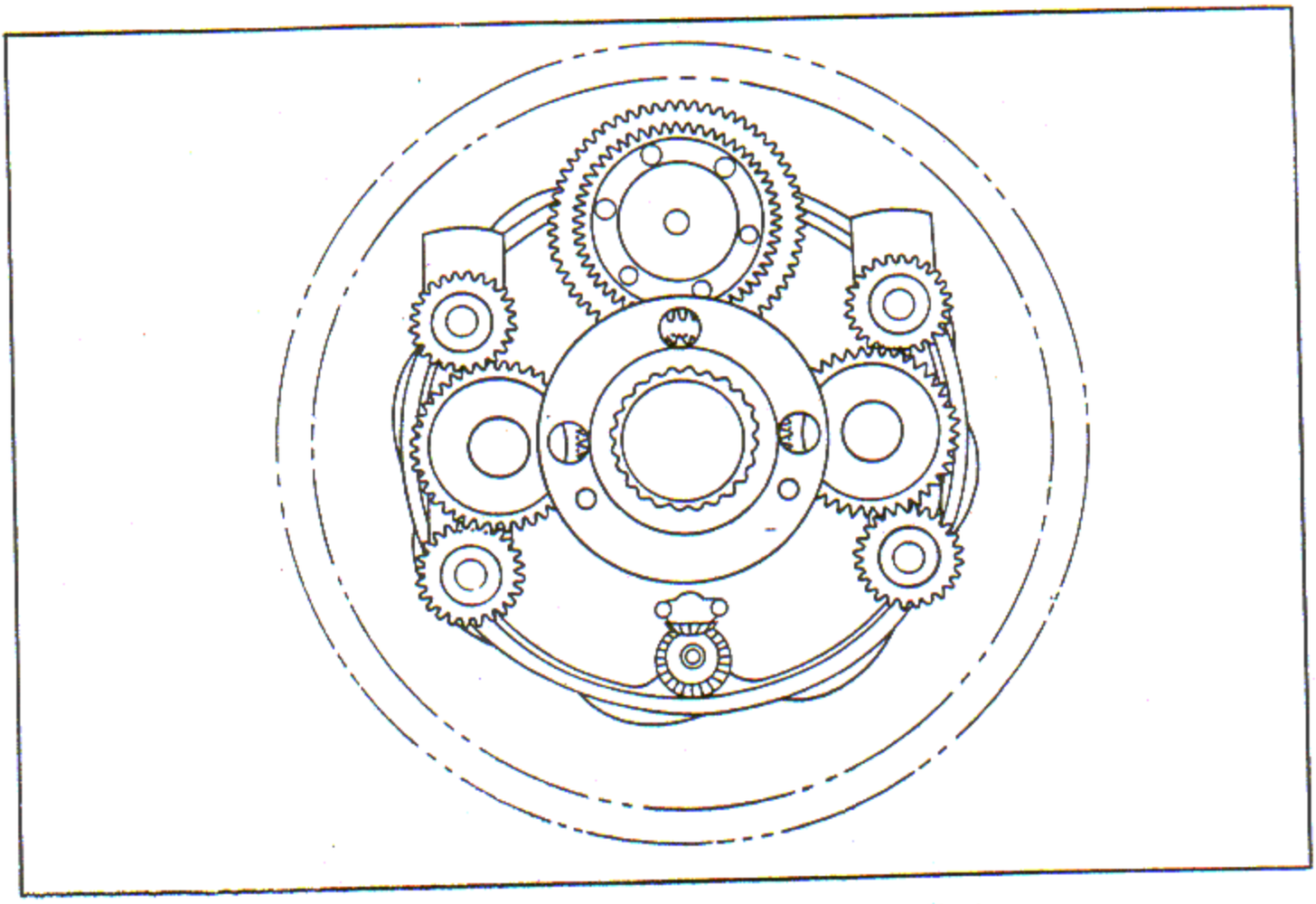

Figure 8-3. Typical Installation of Cam Aligning Tool

8-6. CAM ASSEMBLY ALIGNMENT. (See tool group 11.)

a. Remove the reduction drive gear spacer holding tools.

NOTE

The two reduction drive gear spacer holding tools have purposely been left in the crankcase front main section. Ensure they are removed before proceeding with final assembly.

b. Install the cam assembly aligning tool with the blind spline over the pin in the crankshaft and check the timing marks on all the gears. See figure 8-3.

8-7. REDUCTION DRIVE GEAR INSTALLATION. (See tool group 112.)

a. Place the reduction drive gear, hub side down, on the coil post of the induction heater. Set the automatic timer for approximately 10 minutes to determine the required heating cycle and heat the hub. Check the temperature of the gear hub and the gear teeth, using a suitable gage.

NOTE

The hub temperature should be approximately 204°C (400°F) when measured at the splines. Under no circumstances are the carburized gear teeth to exceed a temperature of 135°C (275°F).

b. After the exact heating cycle has been determined, set the timer permanently and permit the gear to cool to room temperature.

NOTE

In the event a gear must be reheated, permit the gear to cool to room temperature before starting the heating cycle.

c. Figure 8-4 is a wiring diagram of the induction heater and the components necessary for its use. The following items are not supplied with the heater:

Transformer, standard make, primary voltage, 460/230, secondary voltage, 230/115, 250 VA-60 cycle.

Magnetic Contactor, standard size No. 2, two pole with 110 volt coil, 60 cycle enclosed (Model 709, Allen Bradley Co., 128 Greenfield Ave., Milwaukee, Wisconsin, or equivalent).

Eagle Timer, Type HA43-A6 microflex 115 volt, 15 amperes, 60 cycle, 20 minute maximum, 3 seconds minimum cycle (Eagle Signal Corp., Moline, Illinois, or equivalent).

Push Button Switch, Square D, type BF14 with 110 volt, red lens pilot light (Square D Co., 6000 Rivard St., Detroil 11, Michigan, or equivalent).

Master Switch, 60 amperes, 440 volts (Catalog No. MF352, Bulldog Electric Products Co., Jos. Campau and Dunn Rd., Detroil 32, Michigan or equivalent).

d. Install the inner tube of installer on the crankshaft threads and tighten. See figure 2-14. Place the gear on the induction heater and set the automatic timer for the pre-determined heating cycle. Check the hub and gear teeth temperature using a suitable gage. Ensure that the gear teeth temperature does not exceed 135°C (275°F). Immediately after the timer shuts off the current, manually switch the current on and remove the gear from the heater. Manually switch the current off.

CAUTION

It is mandatory that the gear be removed from the heater while the heater current is on to prevent the gear from becoming highly magnetized.

e. Ensure that the oil flat on the crankshaft faces cylinder No. 1 mounting pad and that the pin (blind spline) in the crankshaft is at the left as viewed from the front of the engine.

f. Remove the aligning tool. Install the reduction drive gear (over the inner tube) mating the blind spline with the pin in the crankshaft. Seat the gear and check the timing marks.

NOTE

Engine timing marks can be checked through the three puller holes in the reduction driving gear. If the gears have become misaligned, or if the reduction driving gear cools before it is properly seated, pull the drive gear (refer to paragraph 4-28) and realign the assembly as instructed in paragraph 8-6. Reheat and reinstall the reduction driving gear.

g. Place the outer tube of the installer over the inner tube and rest it on the reduction driving gear. Assemble the support to the installer and insert the ram into the inner and outer tubes. See figure 2-14.

h. Atach a suitable hydraulic pump to the ram and apply 14000 psi pressure. Strike the top of the installer with a bronze hammer to ensure that the gear is properly seated against the crankshaft oil seal ring spacer.

NOTE

If a drop in pressure is noted on the gage, actuate the pump to apply 14000 psi pressure and maintain this pressure until the gear has cooled.

i. Locally fabricate a suitable hooked tool and check the crankshaft oil seal ring spacer to ensure that it is tight.

j. If the spacer is tight and cannot be rotated remove the installing tool.

8-8. CRANKSHAFT END PLAY CHECK. (See tool groups 26 and 113.)

a. Install eye to the crankshaft front end and attach a suitable hoist. Place the base of a dial indicator on the crankcase main section surface and the indicator on the reduction driving gear.

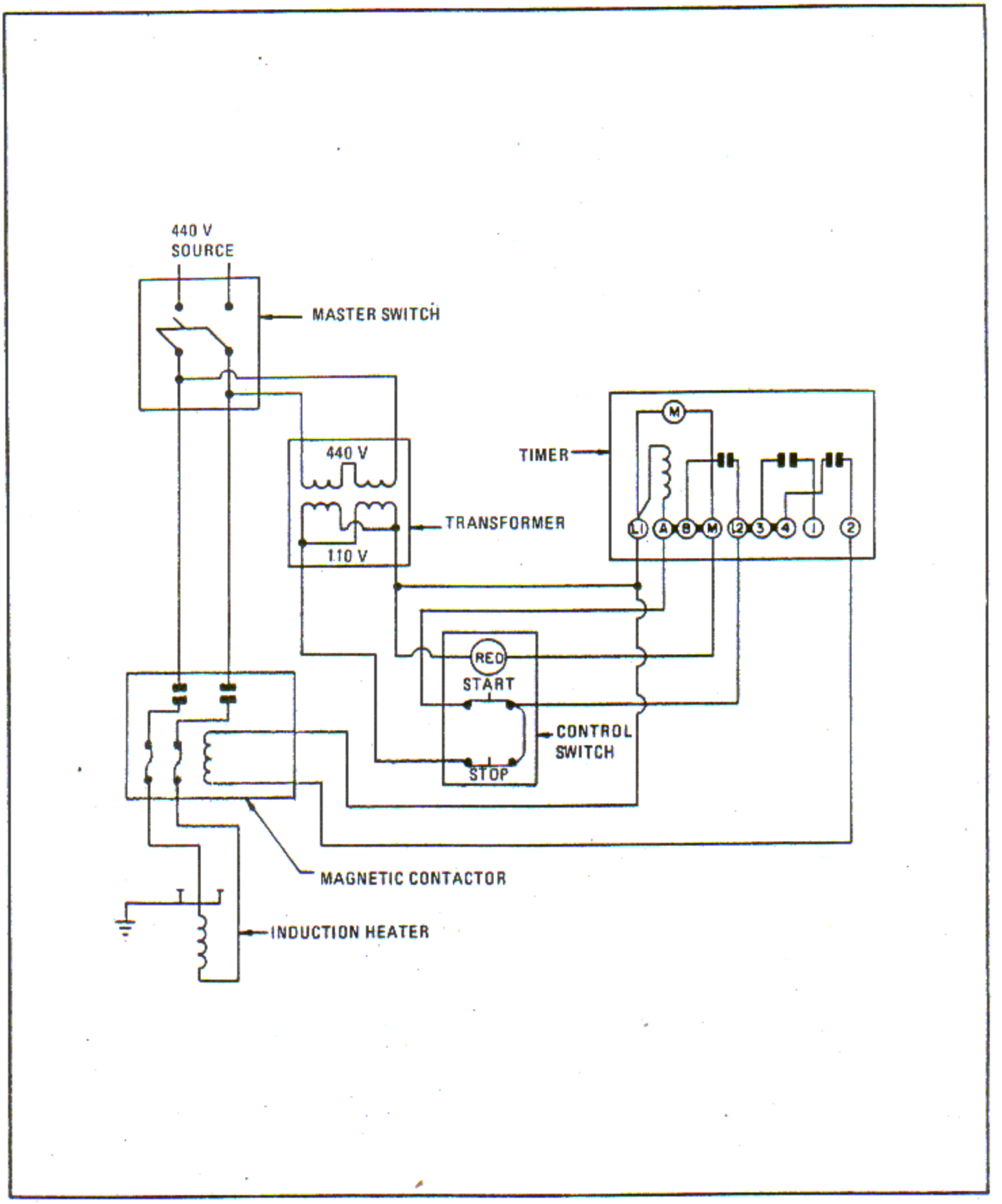

Figure 8-4. Induction Heater Wiring Diagram

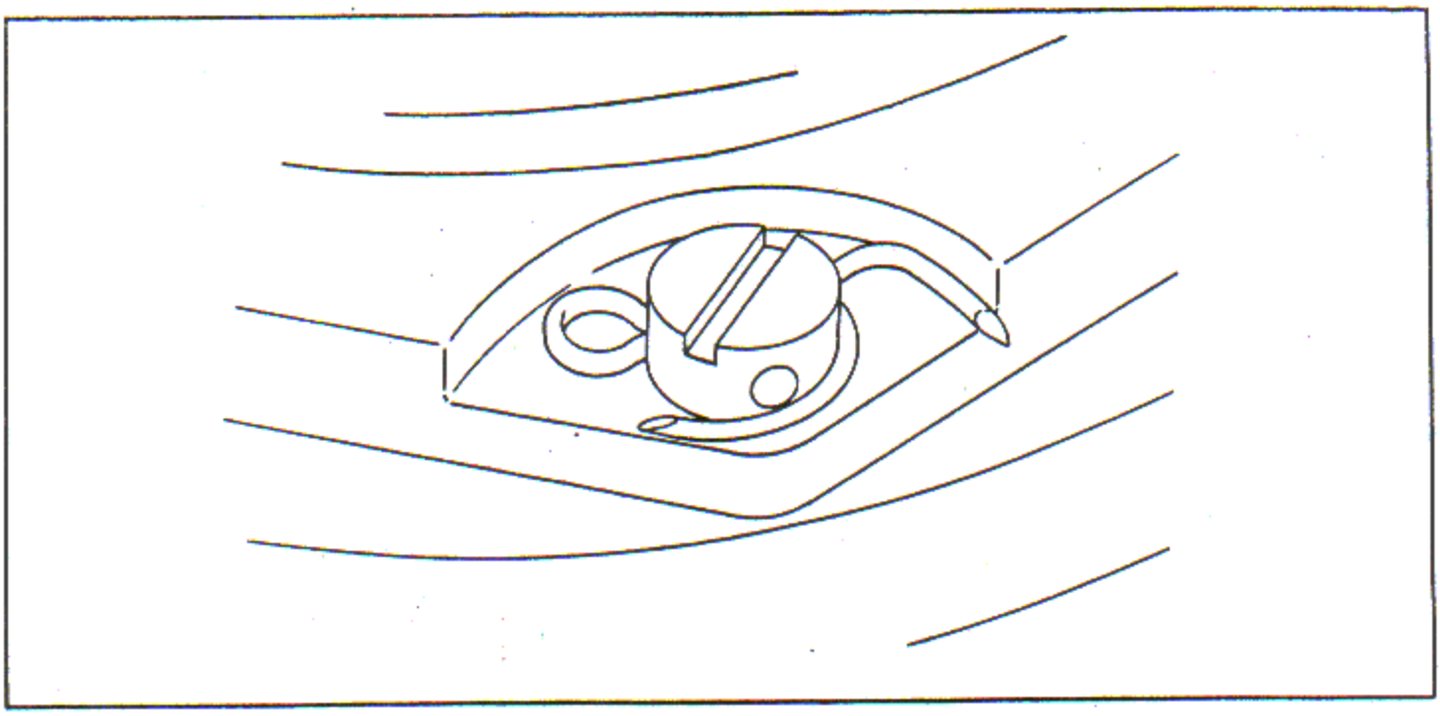

Figure 8-5. Reduction Driving Gear Lock Nut Screw Cotter Pin

b. Check the crankshaft end play by raising and lowering the crankshaft with the hoist. Compare with reference 209, Section IX. If the end play is not within specified limits, the master rod clearance must be increased or reduced within limits to obtain proper crankshaft end movement.

c. Remove the dial indicator and hoist eye. Install the reduction driving gear nut (coat the nut threads with clean engine lubricating oil) and tighten by hand. Use wrench and a suitable torque wrench to tighten the reduction driving gear nut to the value in reference 919, Section IX.

d. Install the reduction driving gear lock nut screw and torque to 10 - 12 inch-pounds. Secure the screw with a cotter pin See figure 8-5.

8-9. CAM TIMING CHECK. (See tool groups 23 and 71.)

a. Install indicator on the No. 1 cylinder mounting pad with the indicator plug in the master rod piston pin hole.

b. Attach adapter to the No. 1 cylinder mounting pad on the crankcase front main section. Leave the checking indicator in position during the entire check.

c. Insert the indicator extension in the intake valve tappet of the No. 1 cylinder. Install and tighten the indicator post on a valve tappet guide stud and clamp the dial indicator on the post so that the indicator spindle rest on the indicator extension. See figure 8-6.

d. Install turning tool and rotate the crankshaft in the normal direction of engine rotation until the master rod is at top center of the exhaust stroke. Set the slide indicator on the tool post at zero.

e. Turn the crankshaft in the opposite direction of normal rotation one-half turn so that the master rod is at bottom dead center. Push the tappet toward the cam to ensure the intake tappet roller is on the cam track. Set the dial indicator at zero.

f. Rotate the crankshaft in the direction of engine rotation until the dial indicator reads 0.051 inch. Check the slide indicator; it should read between 37 and 43 degrees before top center. This is the point of intake valve opening.

g. The exhaust valve tappet may be used to check cam timing in a similar manner. Place the indicator extension in the exhaust valve tappet

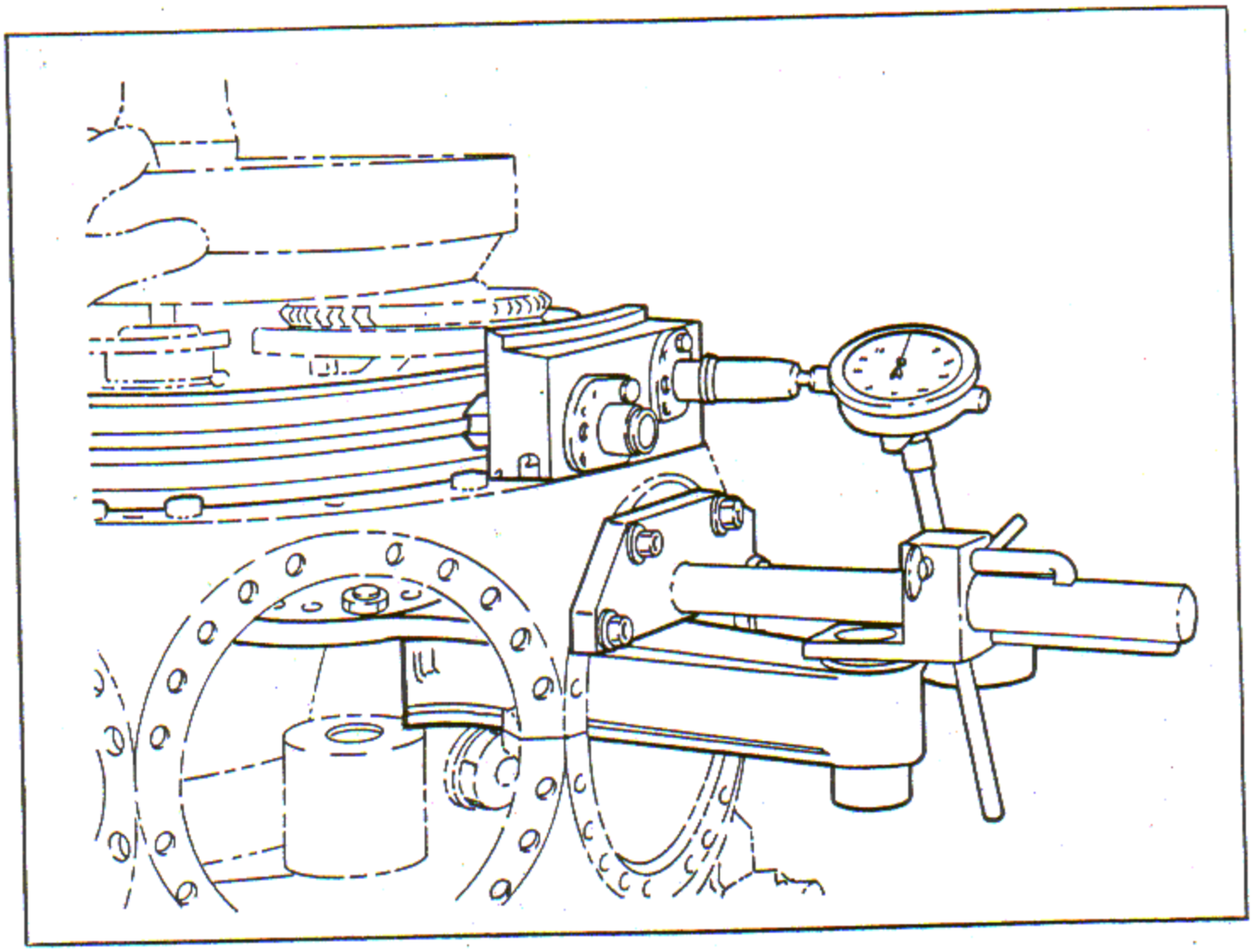

Figure 8-6. Checking Cam Timing

and reset the dial indicator. Continue turning the crankshaft in the direction of normal engine rotation until the master rod is at the next bottom dead center position. Push the tappet in to make sure the exhaust tappet roller is on the cam. Zero the dial indicator and turn the crankshaft opposite in direction to normal engine rotation until the dial indicator reads 0.051 inch. The slide indicator should then read between 27 and 33 indicating that the exhaust valve closes at 27 to 33 degrees after top center.

8-10. CRANKCASE FRONT SECTION INSTALLATION. (See tool group 99.)

a. Install turning tool and handle on the propeller shaft. Install engine hoist eye on the propeller shaft and attach a suitable hoist. Remove the governor substituting cover.

NOTE

Crankcase front section flange spacer, 71307 replaces spacer 63997 in accordance with LES 15502.8.

b. Raise the crankcase front section and remove protectors. Install the flanged seal ring into the groove on the rear parting surface and install the packing ring around the outside diameter of the front section flange. Ensure that the oil seal rings are installed on the oil transfer dowels and the front section locating pin.

c. Lower the crankcase front section onto the crankcase front main section, aligning the governor mounting pad with the No. 1 cylinder mounting pad. As the front section is lowered, see figure 8-7, rotate the governor gear drive shaft and adjust the governor drive gear to mesh with the governor intermediate drive gear.

NOTE

Crankcase front section attaching bolt location 1, 3, 5, 7, 10, 12, 14 and 16 on all engine models require the short attaching bolt. On the -76 and -80 Series engine models, use the long attaching bolts at all other locations. On -86A, -86B models a special head bolt, designed to support the external hydro-oil supply line extension, is used at the number 2 and 4 crankcase attaching bolt locations, and long attaching bolts are used at all other locations.

d. Install the crankcase front section attaching bolts and washers. Do not tighten the bolts until after the installation of the valve tappets and guides. The bolts are torqued after the installation of the ignition harness.

e. Install the gasket and governor drive substituting cover. Secure with washers and fiber lock nuts.

8-11. VALVE TAPPET AND GUIDE INSTALLATION.

a. Install new gaskets on the valve tappet locations on the crankcase front section.

CAUTION

Ensure the valve tappets and guides are secured with holding clips before installing in crankcase front section.

NOTE

Valve tappet guide P/N 146484 is an acceptable substitute for P/N 131716 in R1820-76/-86 model engines. Do not use P/N 131716 as a substitue for P/N 146484 in R1820-80 model engines.

b. Lubricate the valve tappet assemblies with engine lubricating oil, and install tappet in crankcase front section. Align dowel pin in the crankcase front section with mating hole in tappet guide, seat the assemblies by tapping with a fiber mallet. Remove the holding clips.

8-12. PISTON AND CYLINDER INSTALLATION. (See tool group 31A.)

NOTE

All R1820-80A and -80B engines overhauled shall incorporate PPC 4 cylinders.

a. Check all pistons for correct ring installation and correct articulating rod location.

b. Wipe the cylinder barrel, flange and skirt with a clean lintless cloth. Apply engine lubricating oil to the first four inches of the base of the cylinder barrel ID.

c. Apply a light coat of MIL-G-6032A grease to the cylinder oil seal ring and install it over cylinder barrel and against the mounting flange.

d. Arrange the cylinders, pistons, piston pins and plugs on a work bench to be installed in the following sequence: No. 1, 2, 9, 3, 4, 5, 6, 7, 8.

e. Turn the crankshaft using turning tool until the master rod is at the top of its stroke. Remove the master rod protector.

f. Lubricate the piston pin boss, piston pin and piston pin plug assembly with engine lubricating oil. Install No. 1 piston on the master rod and insert the piston pin in the piston and through the master rod. Ensure the piston pin plug is installed.

CAUTION

When installing a piston in locations 4, 5, 6 and 7, reverse the piston so the piston pin plug will face the rear of the engine.

g. Install pistons No. 2 and 9 in the same manner.

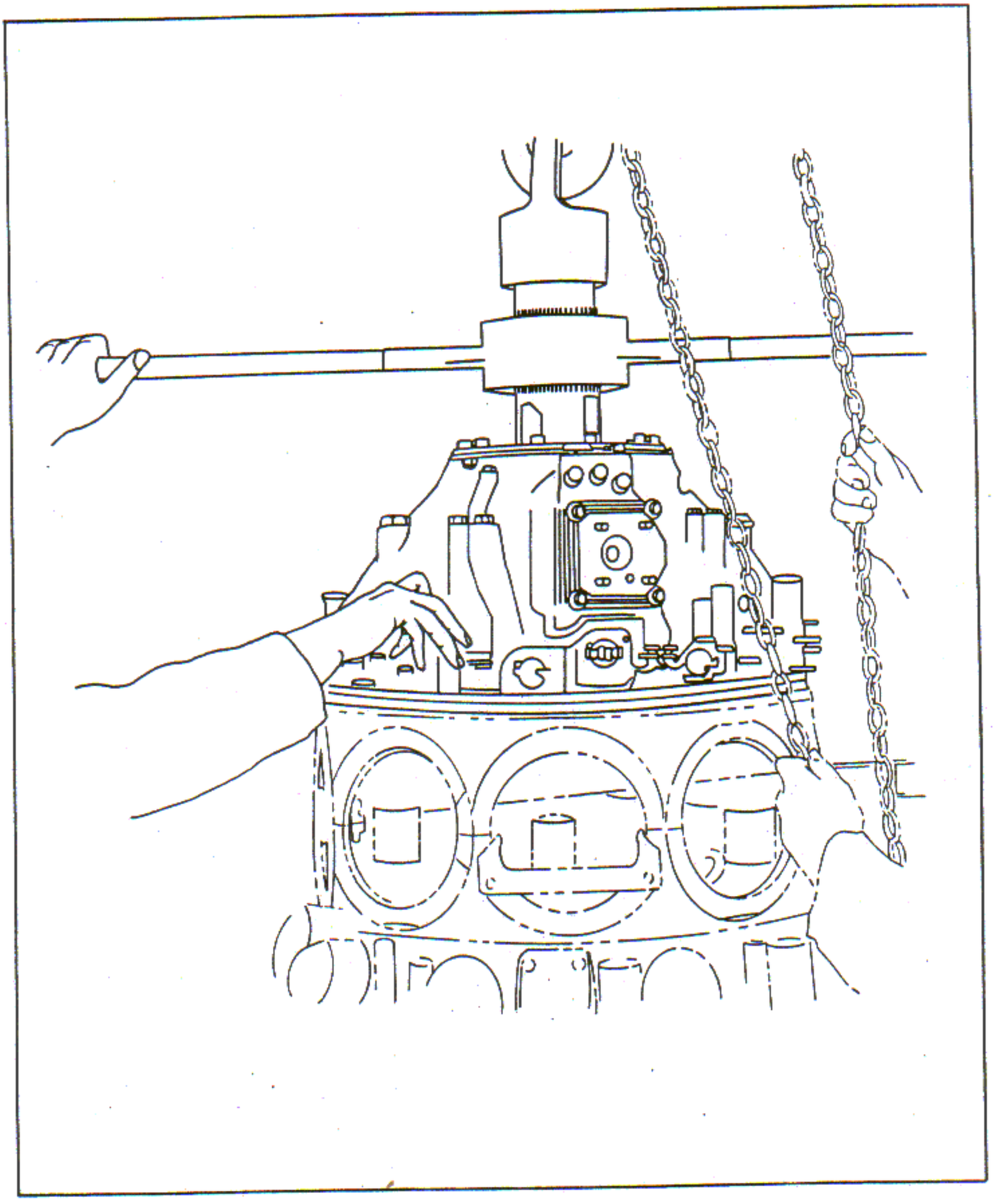

Figure 8-7. Lowering Crankcase Front Section

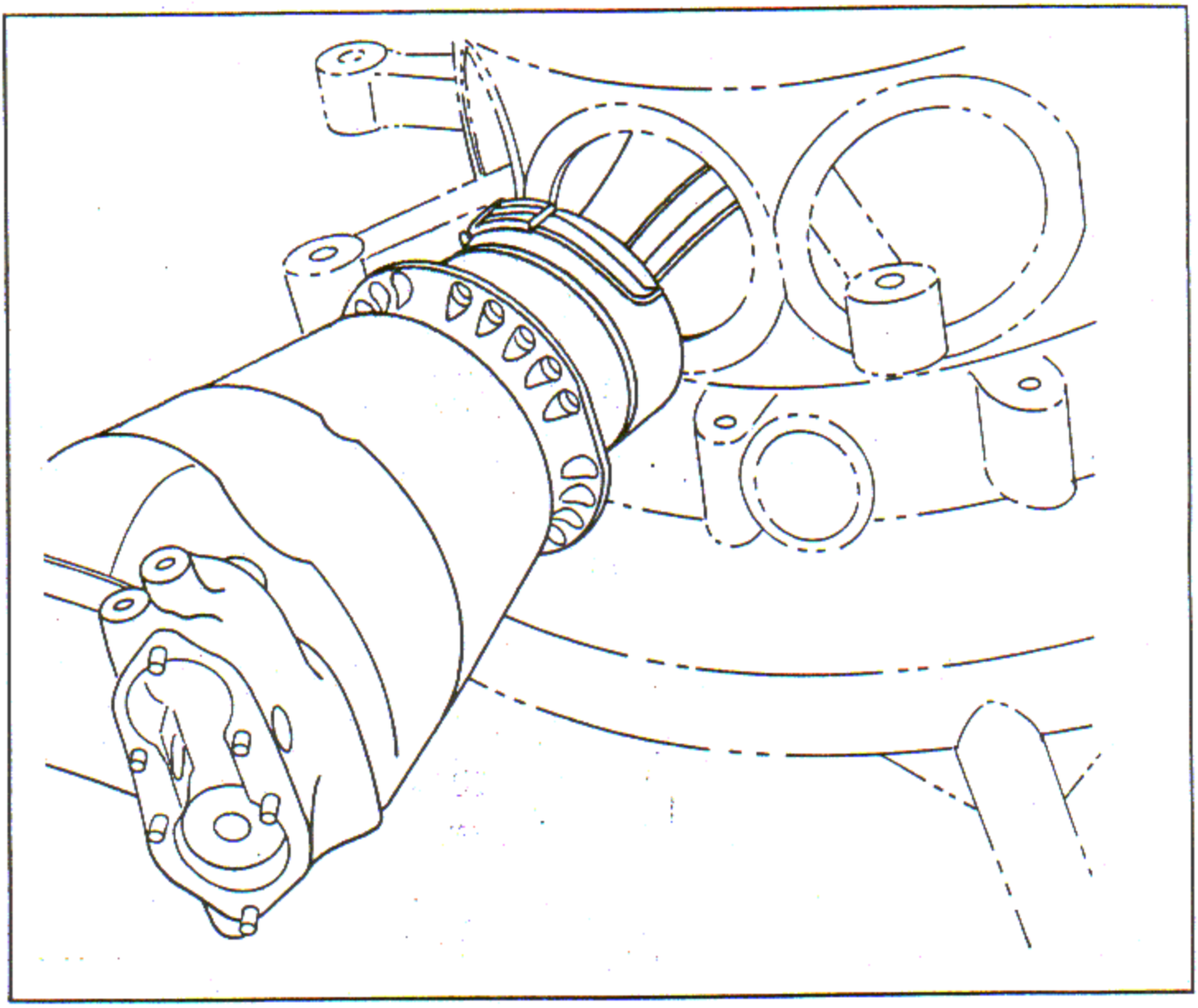

Figure 8-8. Installing Cylinder

h. Compress the upper rings, using clamp, and slide the cylinder over the piston until the upper rings and piston pin plug are in the cylinder barrel. See figure 8-8. Relocate the ring compressor on the remaining ring and slide the cylinder over the ring. Remove the compressor and slide the cylinder in place against its mounting pad.

i. Locate the cylinder to the crankcase using two screws installed 180 degrees apart. Torque the screws using wrench A. Follow this procedure on all cylinders. Install No. 2 and 9 cylinders.

j. Turn the crankshaft until No. 4 articulating rod is at the top of its stroke and install pistons and cylinders No. 3, 4, 5. The remaining cylinders and pistons are installed when No. 7 articulating rod is brought to its top stroke position.

NOTE

Install new cylinder hold-down capscrews at each overhaul.

k. The cylinder hold-down capscrews are placed in a suitable holding tray and MIL-S-45180A, Type III, sealing compound is applied to the first few

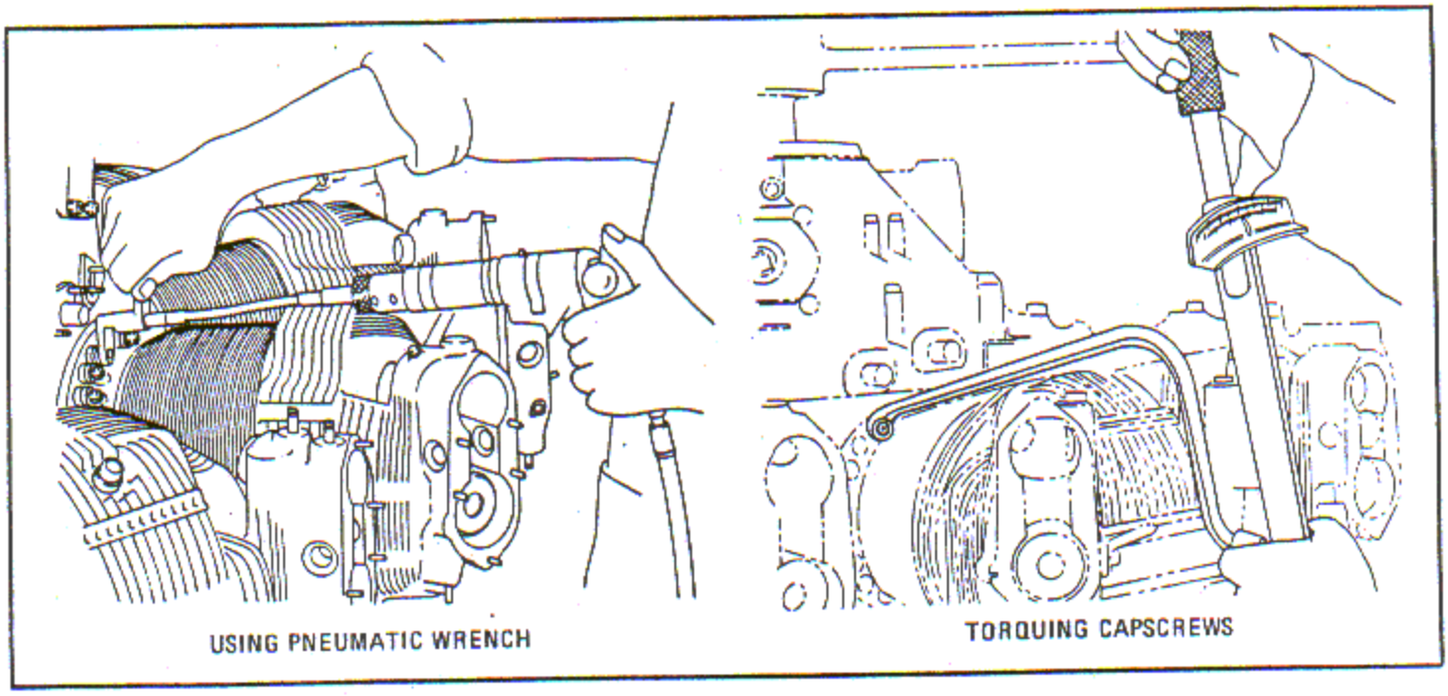

Figure 8-9. Installing Cylinder Capscrews

threads of each capscrew. The sealant must be confined to the threaded area only. The spherical washer, and the neck and head of capscrews should be free of sealant.

l. Install the remaining cylinder capscrews and run them down with wrench B or wrench C. See figure 8-9.

NOTE

The 0.4375 inch diameter cylinder hold-down capscrews come in two different hardnesses. Ensure that all capscrews used in securing any one cylinder are of the same hardness. Capscrews with a minimum Rockwell hardness of C32 are identified by two shallow slots at right angles to each other across the top of the hexagon head.

m. Torque all capscrews to the value specified in table 9-14. Use wrench A and torque wrench.

n. Replace the two locating capscrews in each cylinder with regular capscrews and washers. Torque the screws.

NOTE

The recommended method for torquing the cylinder capscrews is for one operator to torque the capscrews. Have a second operator check the torque and an inspector check the second operator.

o. Install the end tabs of a locking plate in the slots of installing tool. Position the installing tool over a group of five screws and force the locking plate into position by using the impact weight of the tool. See figure 8-10.

p. If, during lock plate installation, cracking occurs at the hexagon formed around the cylinder hold-down screws, adhere to the following limits: any number of tears per locking plate hole that extend down to the second radius or flat plate area are permissible; reject any locking plate where the tear extends beyond the second radius and into the flat plate area.

NOTE

Locking plates are not to be reused. Use a new locking plate at each assembly.

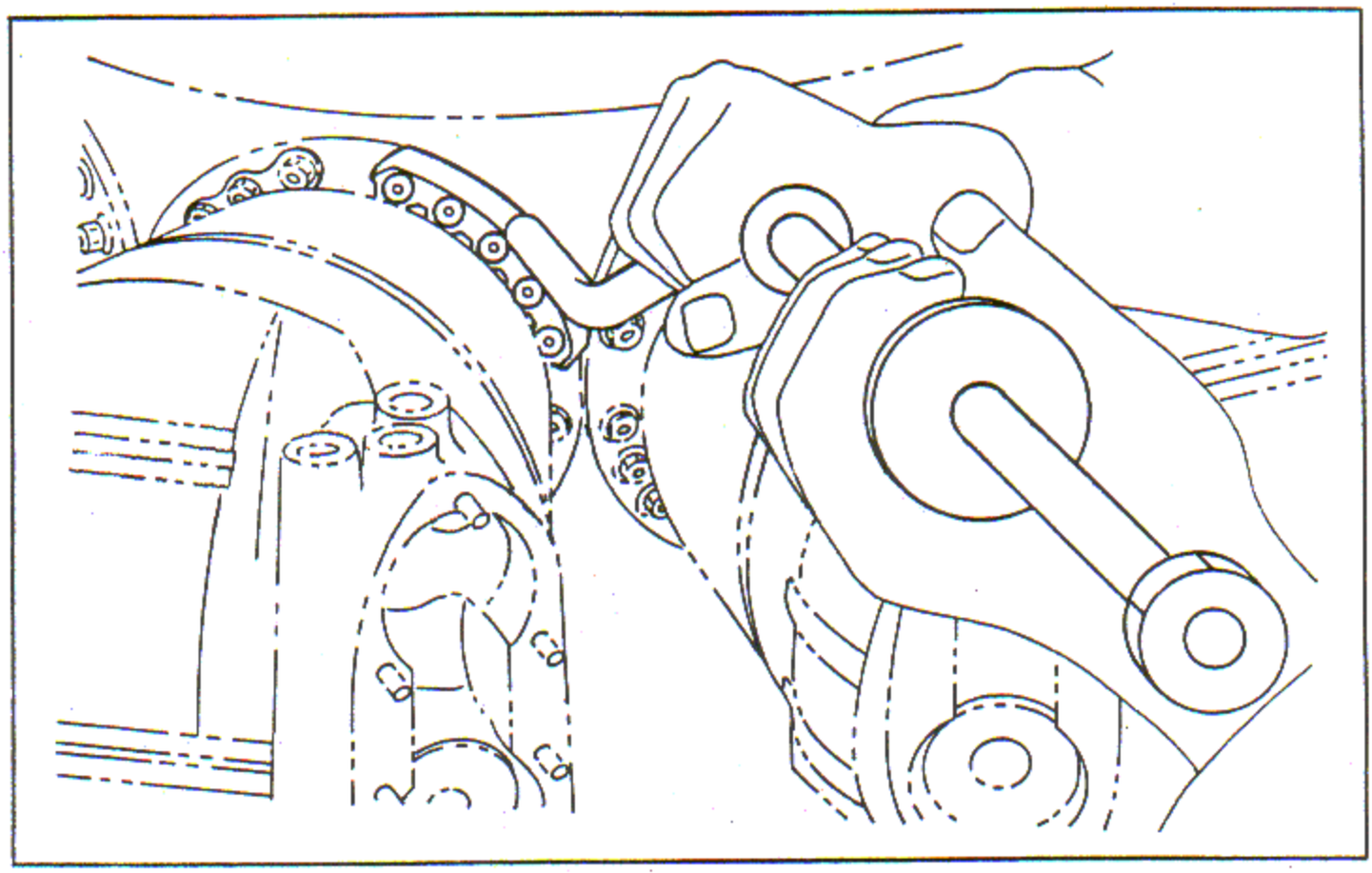

Figure 8-10. Installing Cylinder Capscrew Locking Plate

q. If lock wire is used, safety the screws in groups of five. See figure 8-11.

8-13. EXTERNAL HYDRO-OIL SUPPLY FRONT TUBE INSTALLATION.

NOTE

Apply heat shrinkable tubing, MIL-R-46846 TYPE V, as per NAVAIR 01-1A-20, to external oil supply extension, P/N 2196D21 on R1820-86 engines.

Locate the hydro-oil supply front tube assembly between cylinders No. 7 and 8. Thread the front connector nut on the tube onto the elbow connection located in the crankcase front section. On the R1820-86A, -86B engines, attach external hydro-oil supply tube extension to connector on crankcase front section and elbow connection at right side of governor mounting pad. Do not attach supporting brackets to nose section at this time.

8-14. INTERCYLINDER AIR DEFLECTOR INSTALLATION.

NOTE

Do not install the intercylinder air deflectors, between cylinders No. 1 and 2, 9 and 1, and 5 and 6 at this time.

a. On models R1820-76 Series engines, duct type deflectors are used between cylinders No. 3 and 4, 4 and 5, and 6 and 7. The duct type deflector which incorporates a hole for the external oil supply front tube is used between cylinders No. 7 and 8. Remove the intake pipe packing nuts at the locations where duct type deflectors are used and install the deflectors.

b. Secure these deflectors with extension clamp assemblies. Install a fiber lock nut and washer on the rear end of the extension clamp rod; then install the spring, a washer and the rear half of the

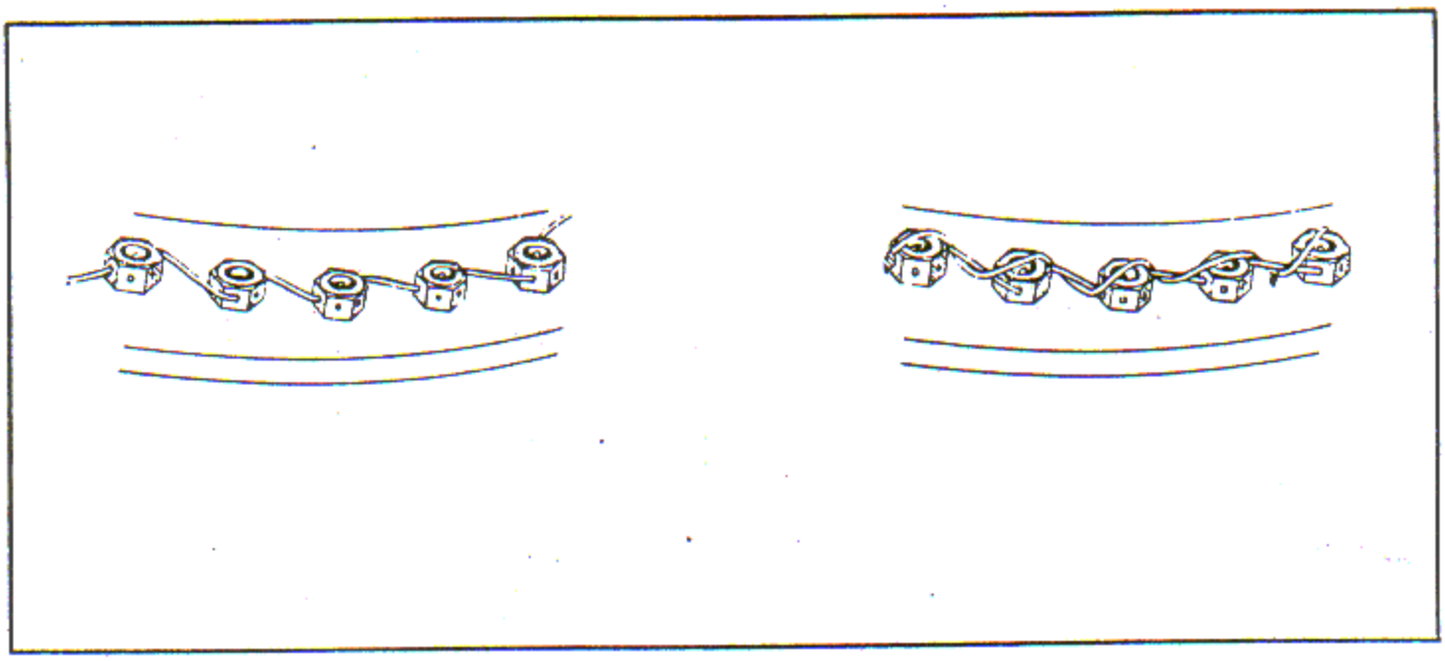

Figure 8-11. Method of Lockwiring Cylinder Hold-Down Capscrews

clamp. Insert the rod through the hole in the deflector from the rear and secure with the front half of the clamp and a fiber lock nut.

c. On R1820-80, -86A and -86B engines, install standard type deflectors used at the locations cited.

d. Install nonduct deflectors between cylinders No. 2 and 3, 8 and 9 on models R1820-76 Series and between all cylinders on models R1820-86A, -86B. Secure the deflectors with lower front clamp assemblies.

e. On models R1820-80A, -80B, install a cylinder air deflector on the exhaust side of No. 2 cylinder and an intercylinder air deflector between cylinders No. 1 and 2 in accordance with Power Plant Change No. 60.

f. On R1820-80A, -80B engines incorporating standardized cylinders, conform to the following procedures as specified in Power Plant Change No. 60.

g. Install cylinder No. 1-2 intercylinder air deflector assembly.

h. Install cylinder No. 2 cylinder air exhaust deflector assembly.

i. Install intercylinder baffle cutout plate in lieu of cylinder air deflector cover in cylinder No. 4-5 intercylinder deflector.

j. Install intercylinder baffle cutout plate in lieu of cylinder air deflector cover in cylinder No. 2-3 intercylinder deflector.

k. Install intercylinder baffle cutout plate in lieu of cylinder air deflector cover in cylinder No. 8-9 intercylinder deflector.

l. Install propeller governor control forward pulley bracket on the bosses provided at the front of No. 1 cylinder intake rocker box using two hex head bolts and two flat washers. Tighten bolts finger tight and temporarily safety wire.

m. Insert the lower clamp bolt through the hole in the deflector from the rear. Install the lower clamp spacer and the clamp. Secure with a washer and fiber lock nut. The remaining installation will be completed when the rocker box covers are installed.

8-15. VALVE TAPPET SOCKET AND SPRING INSTALLATION.

a. Install a new gasket on the valve tappet guides ensuring the holes in the gaskets align with the guide pin in the guides.

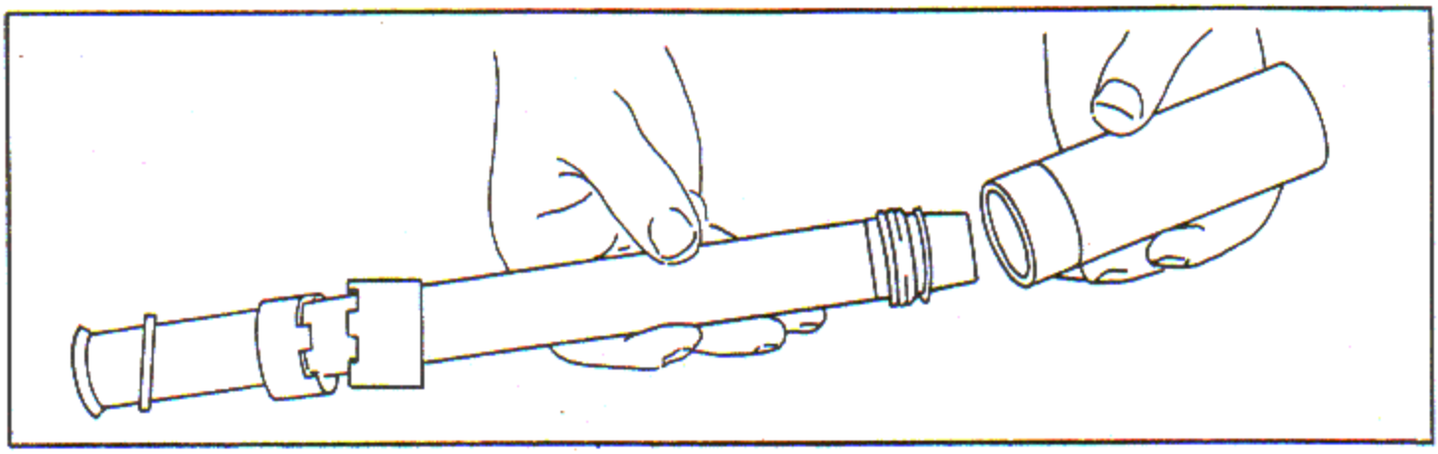

Figure 8-12. Push Rod Housing Inner Packing Ring and Washer Installing Tool

b. Lubricate the valve tappet springs and sockets with clean engine lubricating oil. Install a spring and socket in each valve tappet. Ensure that the socket moves freely in the tappet and that it seats on the tappet end face.

NOTE

Do not install the spring and socket in No. 5 cylinder intake valve tappet at this time.

8-16. PUSH ROD HOUSING AND ADAPTER INSTALLATION. (See tool groups 108, 109, 110 and 111.)

a. Coat the threads of the push rod housing inner and outer connection nuts with Federal Specification TT-A-580a, anti-seize compound. Install the metal oil seal ring on the push rod housing with the chamfered side against the flared end of the housing. Slide the outer nut and then the inner nut on the housing.

b. Coat the ID, OD and faces of the two asbestos rubber washers and packing ring with a light coat of MIL-G-6032A grease. Place an asbestos washer, the packing ring, and the other asbestos washer on pilot. Locate the inner connection nut over the push rod housing and insert pilot into the inner end of the housing until the shoulder butts the housing. Push the washers and packing ring on the housing, using sleeve as shown in figure 8-12. Slide the push rod housing adapter on the housing. Complete the assembly of the remaining push rod assemblies in the same manner.

c. Place push rod housing assembly over valve tappet sockets and springs. Start outer connection nuts.

d. Push the housing adapter onto the studs. Secure with nuts and washers. Using wrench, torque the nuts to 80 - 85 inch-pounds. See figure 8-13.

NOTE

Do not install No. 5 cylinder intake push rod housing at this time.

e. Torque the push rod housing outer nuts with wrench and torque wrench to the value specified in reference 912, Table of Limits, Section IX. See figure 8-14.

f. Torque the push rod housing inner nuts with wrench and torque wrench to the value specified in reference 909, Table of Limits, Section IX.

g. Lockwire the outer connection nuts to the screw head provided in each rocker box.

8-17. FRONT OIL PUMP INSTALLATION. (See tool groups 49, 50, 109 and 110.)

a. Remove the protective covers from the oil sump mounting pads on the crankcase front section and the supercharger front housing. Install gaskets over the studs at these locations. Insert the internally splined end of the pump drive shaft through the opening in the front of the sump and engage the shaft with the splines of the pump drive gear.

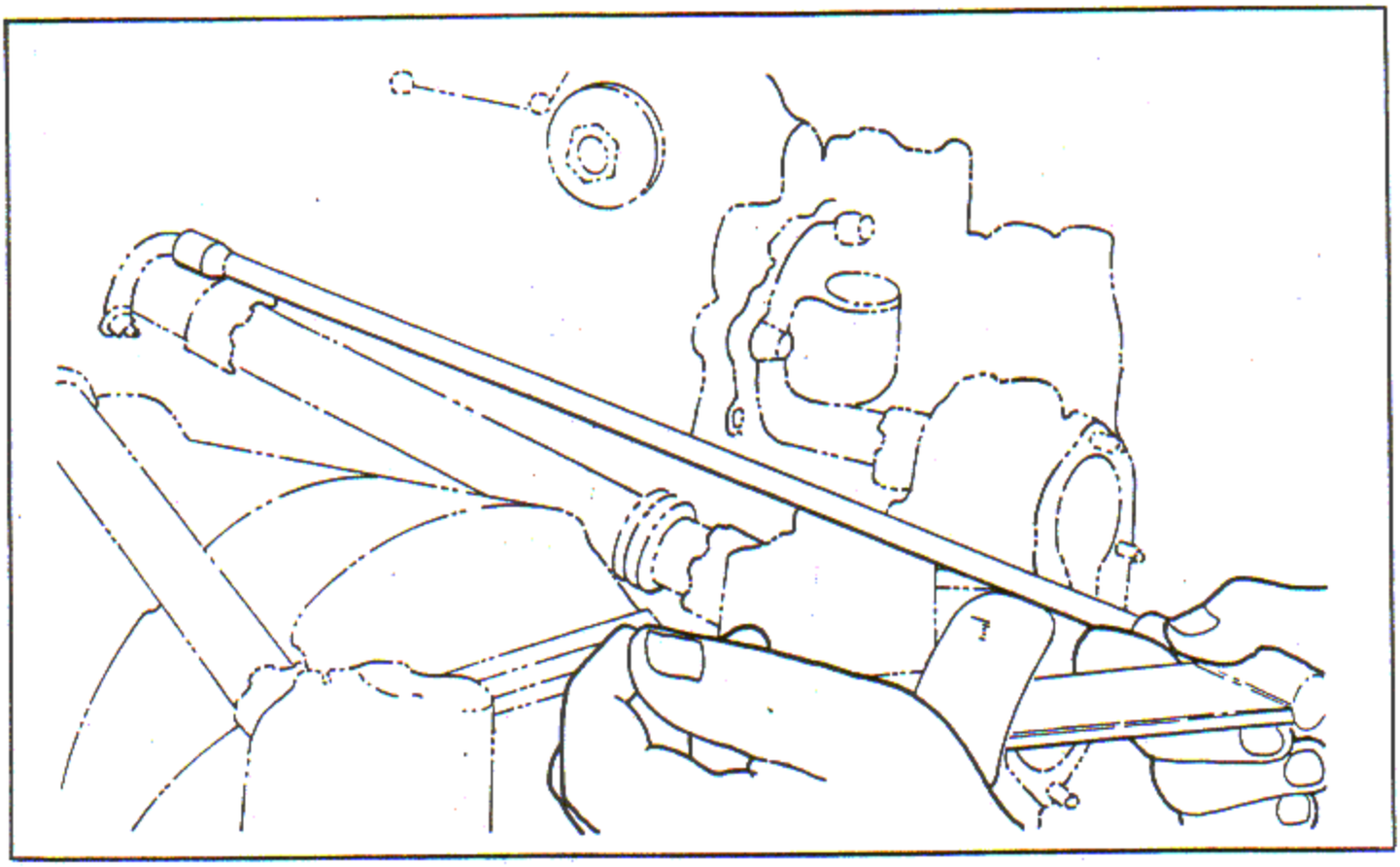

Figure 8-13. Torquing Push Rod Housing Adapter Nuts

b. Push the sump in until it is resting on the attaching studs, then place aligning tool across the two front studs and around the oil sump drive shaft. This tool aligns the shaft with the drive shaft gear. See figure 8-15. Push the sump in until the shaft mates with the gear. If necessary, turn the propeller shaft until the shaft and gear mesh. See figure 8-16. Remove the aligning tool and push the sump all the way in against the mounting pad.

c. Pull the sump out from the mounting pad until the shaft may be seen and check for proper installation by turning the propeller shaft. The oil pump shaft will turn if it is properly meshed with the gear.

d. Secure the front oil sump to the crankcase front section and supercharger front housing with washers and fiber locknuts. Torque the nuts to 275 - 300 inch-pounds with wrench and a suitable torque wrench.

e. Install No. 5 cylinder intake valve tappet spring and socket, push rod housing and adapter. Torque the adapter nuts to 80 -85 inch-pounds.

f. Torque the push rod housing outer nuts with wrench and torque wrench to the value specified in reference 912, Table of Limits, Section IX. See figure 8-14.

g. Torque the push rod housing inner nuts with wrench and torque wrench to the value specified in reference 909, Table of Limits, Section IX.

h. Install the inter-cylinder air deflector between cylinders No. 5 and 6. Secure the deflector to the front oil sump with two lock washers and attaching screws.

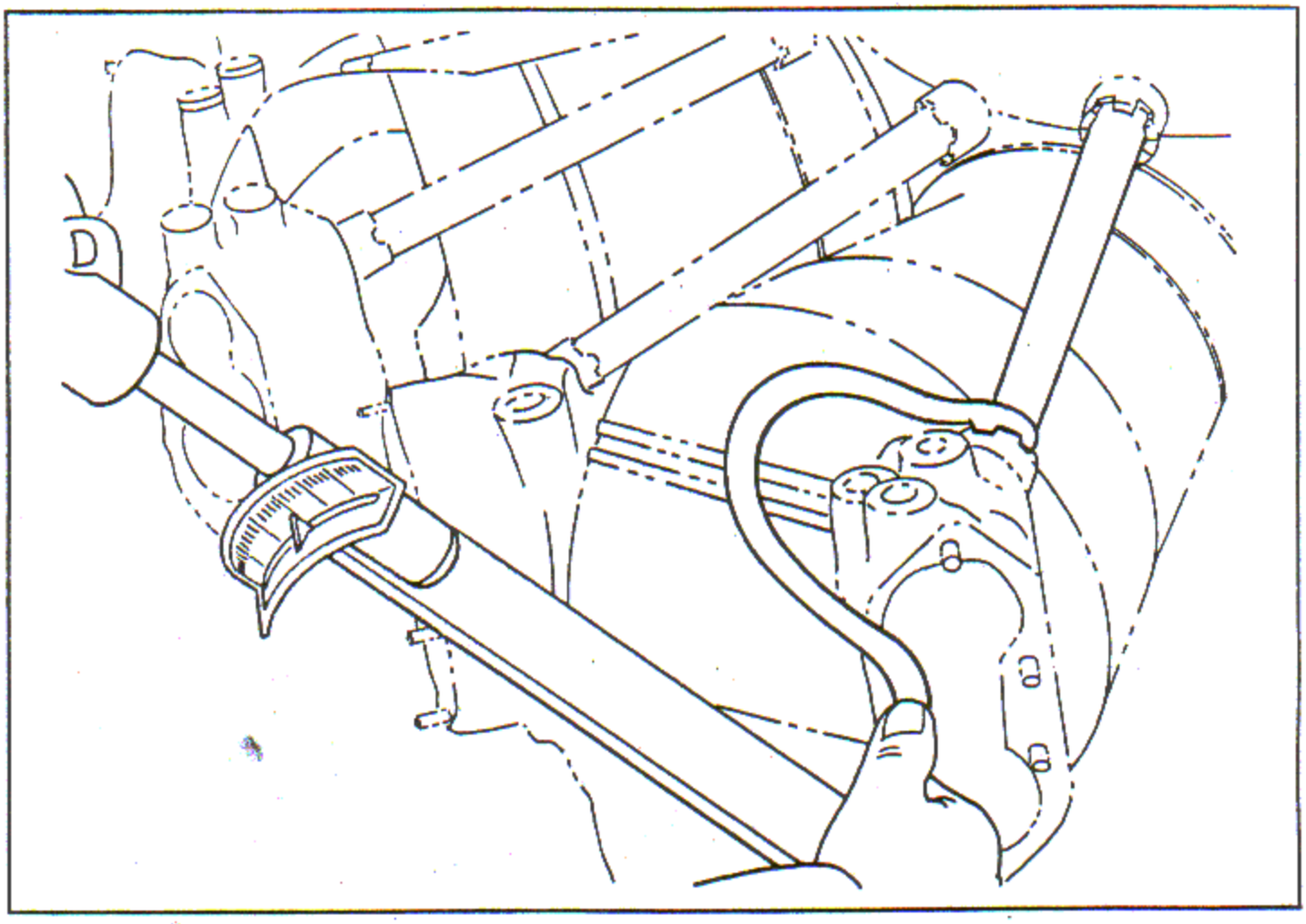

Figure 8-14. Torquing Push Rod Housing Outer Nut

8-18. PUSH ROD AND ROCKER ARM INSTALLATION.

a. Lubricate the ball ends of the push rods and install them in the push rod housings. Press each rod against the valve tappet socket several times to make sure the socket is functioning properly.

b. Turn the valve clearance adjusting screws out of the rocker arms as far as possible.

c. Lubricate the rocker arm bearings and rollers.

NOTE

Before hub bolt installation stamp identification letters, using 3/16 inch characters, on the bolt head as follows:

1. New bolts - stamp letter "A".
2. Used bolts with "A" on head - stamp letter "B".
3. Used bolts with "B" on head - stamp letter "C".

d. Place a spherical washer on the hub bolt, with the flat side against the head of the bolt. Follow the washer with a rubber seal ring.

e. Install the rocker arm hub bolt through the rocker box and through the rocker arm. Ensure that the head of the bolt faces the spark plug bushing.

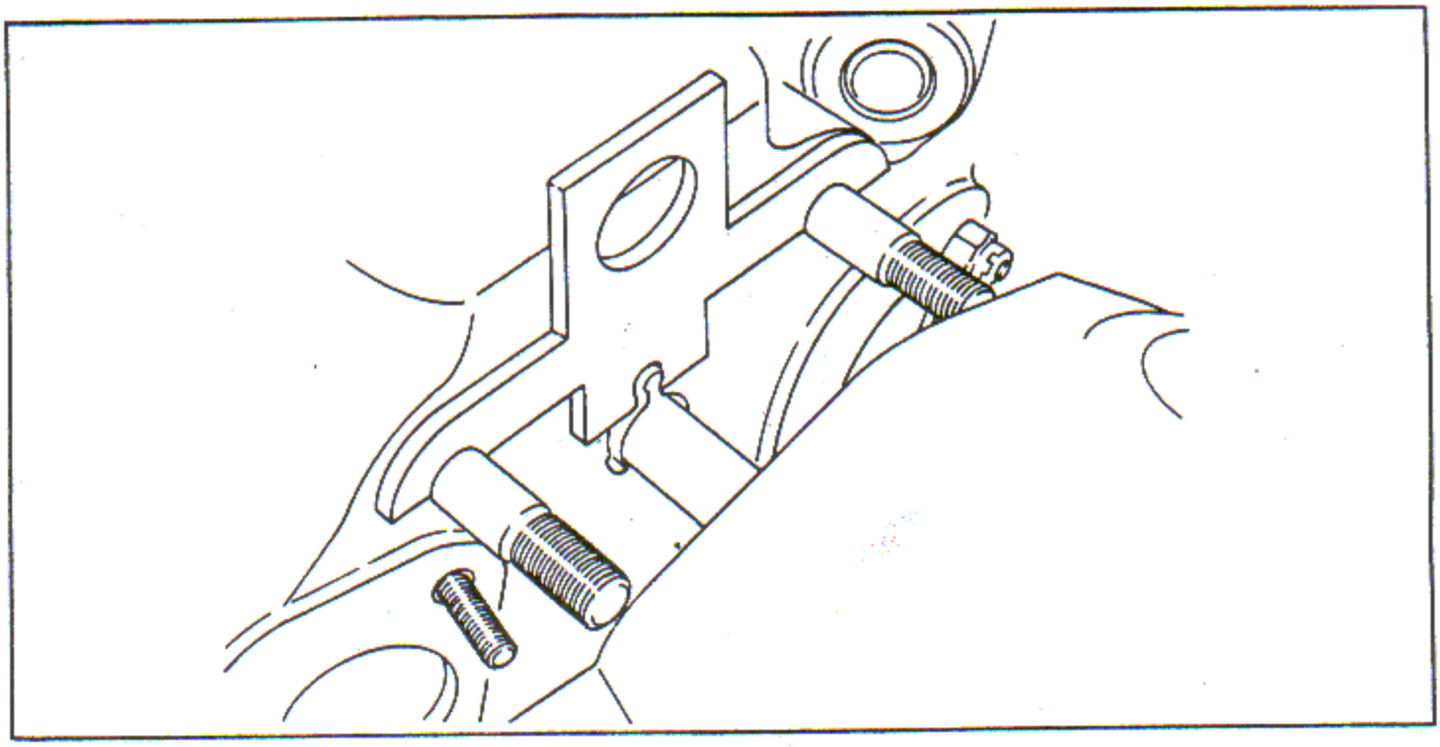

Figure 8-15. Front Oil Sump Drive Shaft Aligning Tool Installed

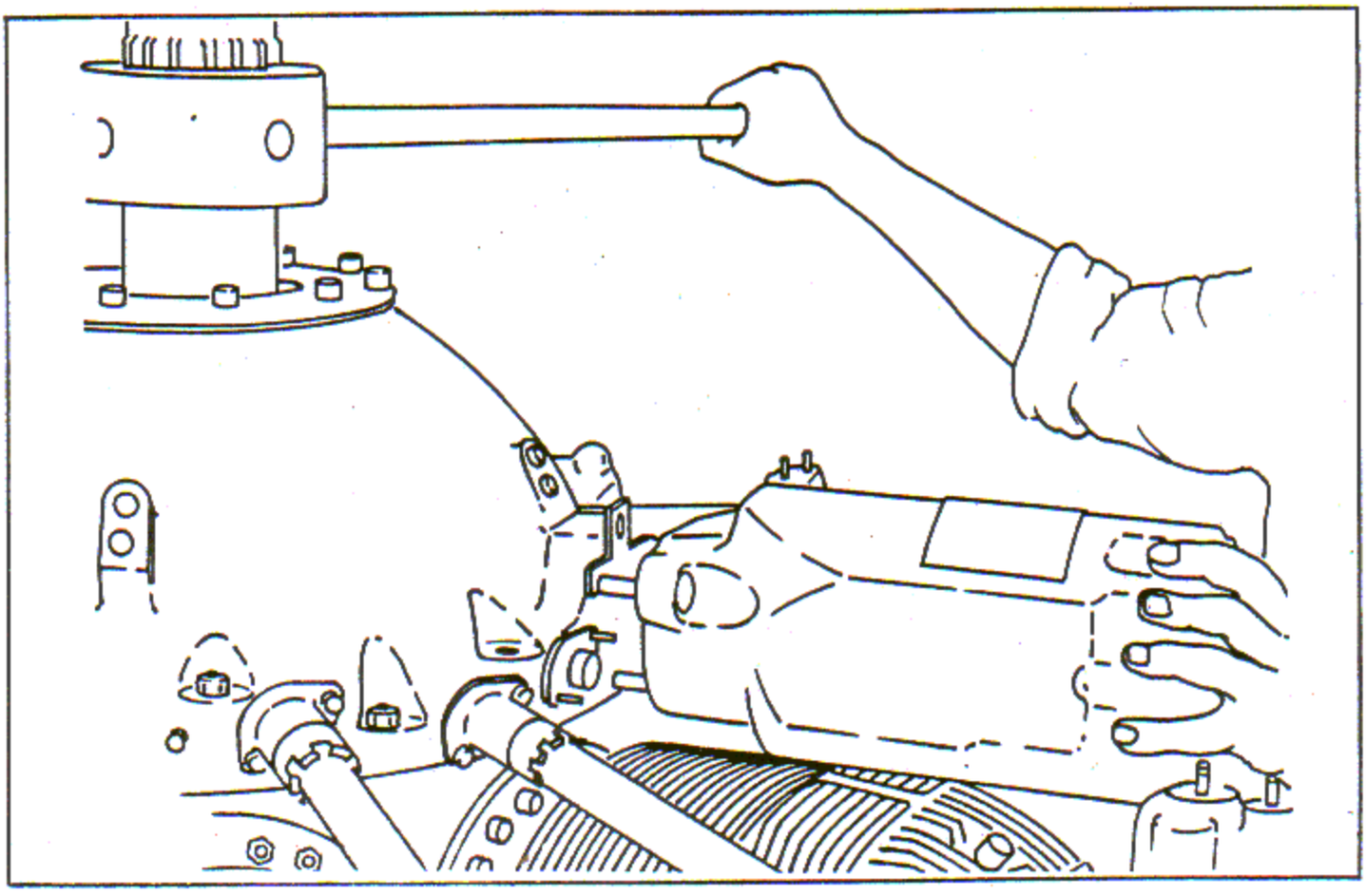

Figure 8 16. Aligning Front Oil Sump Drive Shaft and Driving Gear

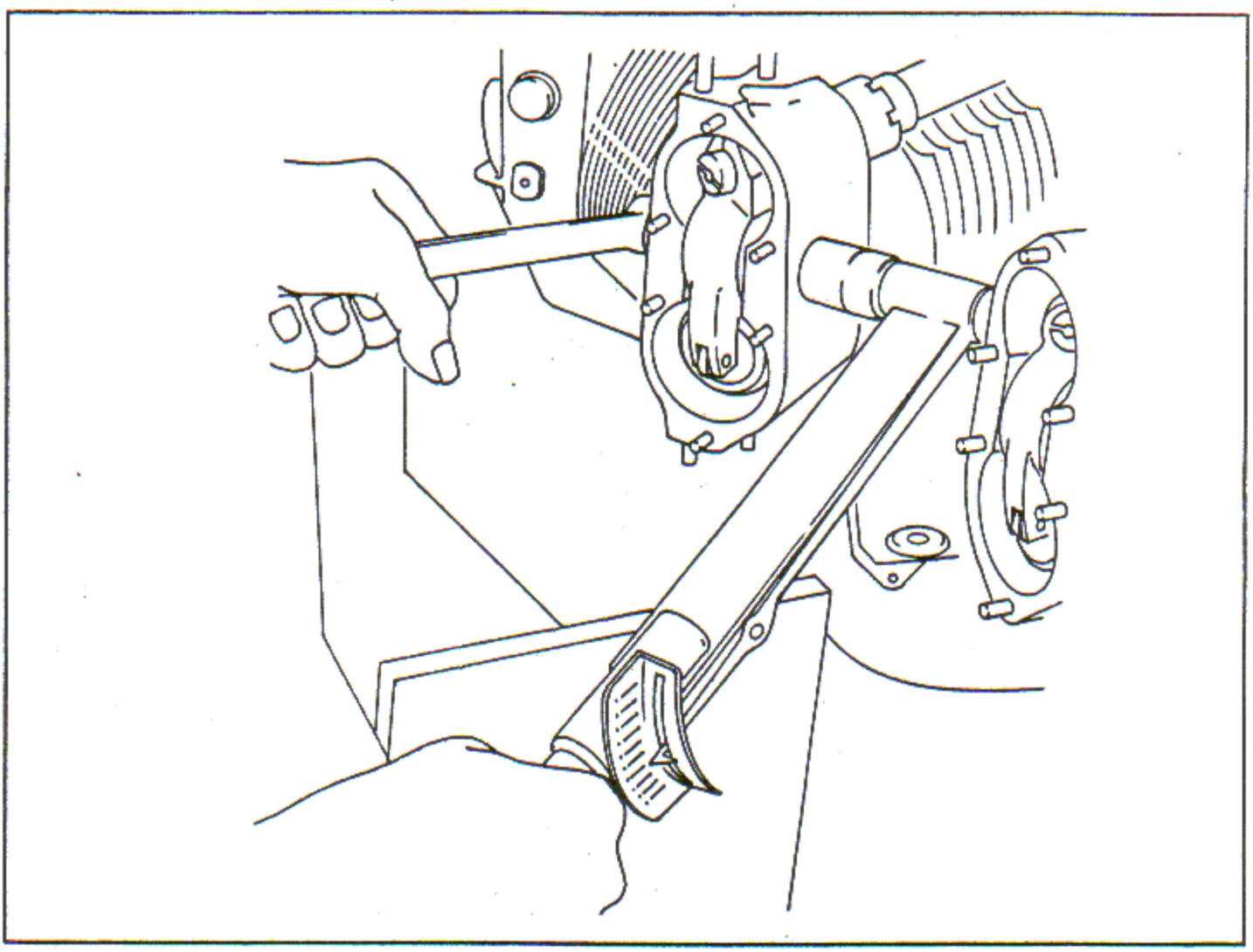

Figure 8-17. Torquing Rocker Arm Hub Bolt Nut

f. Place a rubber seal ring and a spherical washer, flat side toward the nut, over the threaded end of each bolt and install the retaining nut finger tight.

g. Turn the propeller shaft sufficiently to permit installation of the remaining push rod and rocker arm assemblies in the same manner.

h. Torque the nuts to the value specified in table 9-11. See figure 8-17. Cotterpin the nuts.

8-19. CYLINDER HEAD AIR DEFLECTOR INSTALLATION.

a. Place the cylinder head deflectors on the cylinder heads and secure them to the intake and exhaust rocker boxes with attaching screws and lock washers.

b. Tighten the screws by inserting a screwdriver through the slots in the head deflectors. Install the deflector to cylinder head fin attaching screws.

8-20. IGNITION CABLE ASSEMBLY INSTALLATION.

NOTE

To ensure sufficient clearance between the ignition cable and governor pad on the R1820-86B engine model, install the cable manifold bracket extensions on the forward side of the brackets with the attaching bolts inserted from the front to the rear of the bracket.

a. Lower the ignition cable assembly into position on the crankcase front section, locating the main conduits between cylinders No. 1 and 2 and between cylinders No. 1 and 9. Guide the conduits between the supercharger front housing and the engine assembly stand.

b. Install the washers between the harness bracket and the crankcase front section attaching bolt bosses. Secure the manifold brackets to the crankcase front section with the crankcase attaching screws.

c. Torque all the crankcase front section attaching screws to value specified in reference 905, Section IX. Lockwire the screws in pairs.

NOTE

After torquing crankcase front section attaching screws, check tappets for freedom in the valve tappet guide.

d. Install the external hydro-oil supply line extension for R1820-86A, -86B engines on the No. 2 and No. 4 attaching screw locations and secure with attaching nuts.

e. Tighten the main conduit to cable manifold attaching nuts and lockwire.

f. Secure the rear spark plug clips to the exhaust push rod housings on all cylinders with the exception of No. 6 cylinder which will have the spark plug lead clip secured to the intake push rod housing.

CAUTION

Examine to ensure approximately one quarter inch minimum clearance will exist between all spark plug ignition leads and push rod housings.

g. Pass the rear spark plug leads through the cylinder head deflectors at the grommet location. If channel type head deflectors are used, push the leads into the channels.

h. Install the deflectors between cylinders No. 1 and 2 and 9 and 1. Secure the deflectors with the lower front clamp assemblies, and attaching nut and washer.

8-21. VALVE CLEARANCE ADJUSTMENT. (See tool groups 42, 99 and 116.)

NOTE

The following instructions apply, in general, to both the intake and exhaust valve adjustment.

a. Remove the rocker box covers from the cylinder in which the valves are to be adjusted. Refer to paragraph 4-20. Remove the spark plug lead and the spark plug as instructed in paragraph 4-14 and 4-18.

b. Install propeller shaft turning tool over the propeller shaft splines. Turn the propeller shaft slowly until the piston in the cylinder is approximately 90 degrees before top center on the compression stroke.

c. Assemble pivot arm and scale on piston position indicator. Install the piston position indicator assembly in the front spark plug hole of No. 1 cylinder.

CAUTION

Check the pivot arm contour before and after valve adjustment to ensure the arm is not bent or distorted. Use figure 8-25 as a template to check the pivot arm.

d. Establish top dead center by carefully rotating the propeller shaft in a clockwise direction until the pointer stops. Align the zero mark on the timing scale with the pointer. Check for this position by pressing down on the adjusting screws in the rocker arm.

NOTE

When a piston is at top center on the compression stroke, both valve tappet rollers are between the lobes on the cam, and the rocker arm rollers can be lifted from the valve stem tips by pressing down on the adjusting screw end of the rocker arm.

e. If the piston passes top dead center, turn the propeller shaft in the direction opposite normal

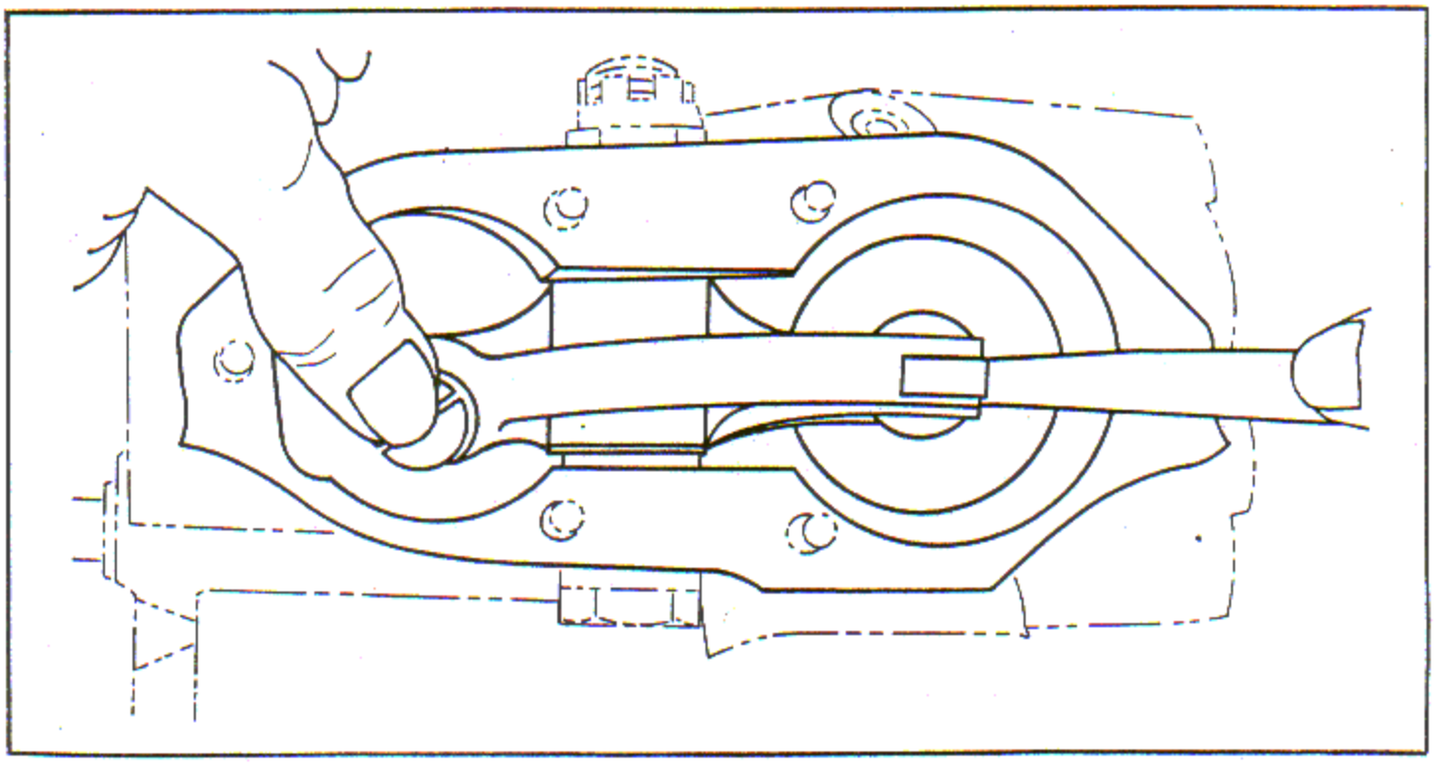

Figure 8-18. Adjusting Valve Clearance

rotation approximately one quarter of a revolution to remove gear train backlash. Move the pointer to the top of the scale and repeat step d.

f. After locating top dead center, press hard against the adjusting screw until the tappet spring is fully compressed. Place a 0.003 inch feeler gage between the rocker arm roller and valve stem tip. See figure 8-18. Maintain sufficient pressure on the adjusting screw with a suitable broad blade screwdriver to take up all clearance in the push rod and valve tappet assembly. Tighten the adjusting screw until the feeler gage binds. Back off the adjusting screw just enough to permit removal of the feeler gage. Tighten the adjusting screw lock screw sufficiently so the adjusting screw will not turn when the propeller shaft is rotated.

NOTE

Adjust all valve clearances in cylinder firing order as follows: 1, 3, 5, 7, 9, 2, 4, 6, 8 with the piston on top dead center. Use the top center indicator in each cylinder to determine top dead center when the piston is on the compression stroke.

g. Conduct a second valve clearance check; reset to 0.003 inch only those valve clearances less than 0.001 inch or more than 0.008 inch.

NOTE

If the rocker arm assembly roller binds on the valve tip and cannot be freely rotated, the clearance is less than 0.001 inch and shall be readjusted. Use 0.008 inch feeler stock to check for maximum limit; readjust if the feeler can be inserted.

h. Conduct a third valve clearance check; reset to 0.003 inch only those valve clearances less than 0.001 inch or more than 0.008 inch.

NOTE

On all valve clearance adjustments, disregard alignment of the adjusting screw oil passages and the rocker arm split.

i. If an intake valve clearance in excess of 0.040 inch, or an exhaust valve clearance in excess of 0.070 inch is noted while performing a clearance check (checked cold); or if a flat or broken valve tappet roller or bushing, broken valve spring, bent or broken push rod or rocker arm, loose valve clearance adjusting screw, or any other condition which could cause excessive clearance is encountered, the cylinder shall be removed and tagged indicating the discrepancy.

j. After completion of the third valve clearance check procedure, torque the adjusting screw lock in accordance with the following list using a suitable torque wrench.

Lockscrew	Hex Head Dim.	Lockscrew Wrench No.	Torque Value (Inch-Pounds)
136313	7/16 inch	810557 or prior	250 - 300
135826	3/8 inch	810296	175 - 225

NOTE

Correct torquing of the adjusting screw lockscrew is of extreme importance for the screw to be effective as a lock. The adjusting screw breakaway check will not necessarily detect lockscrews that were not properly tightened. Therefore, this check shall not be construed as the sole criterion for proper tightening of the lockscrew.

CAUTION

During the torquing procedure ensure the wrench is not binding on the exhaust rocker arm and that it is not striking the side of the rocker box. Refer to figure 8-19. Failure to observe this caution can result in a false torque reading and improper adjusting screw retention.

k. To ensure the adjusting screw is properly retained, check the adjusting screw for proper breakaway torque as follows:

(1) Using screw driver (1, figure 8-20) and a suitable torque wrench (2), apply 350 inch-pounds to the screw (3) in a loosening direction as shown. Ensure the piston is located at top dead center of the compression stroke on the cylinder being checked to ensure that the rocker arm is not pre-loaded by cam and push rod action.

CAUTION

The adjusting screw shall not move when the 350 inch-pounds breakaway torque is applied.

(2) In the event the adjusting screw moves during the breakaway check, readjust the valve clearance and repeat the complete torquing and breakaway check.

l. Remove the piston position indicator assembly from the cylinder. Install the spark plug and the spark plug lead as instructed in paragraph 8-53.

m. Reinstall the rocker box covers as instructed in paragraph 8-22.

8-22. ROCKER BOX COVERS INSTALLATION (R1820-76 SERIES).

a. Install the cylinder air deflector upper clamp grommets over the studs on the deflectors between cylinders No. 1 and 2, 2 and 3, 5 and 6, 8 and 9, and 9 and 1. The grommet incorporates a slit on each side for the long extensions on the rocker box covers.

b. Install new, clean, dry rocker box cover gaskets on all cylinders.

c. Install the rocker box covers on all cylinders. Rocker box covers with long extensions are used on the intake rocker boxes of cylinders No. 3, 4, 6 and 7, and on the exhaust rocker boxes of cylinders No. 4, 5, 7 and 8.

d. Push the rocker box cover extensions into the slits of the grommets. Install the rocker box cover washers and nuts finger tight. Install the plates over the deflector studs and against the grommets. Secure with fiber lock nuts.

e. Run the rocker box cover nuts down and then torque, starting at the center nuts and then

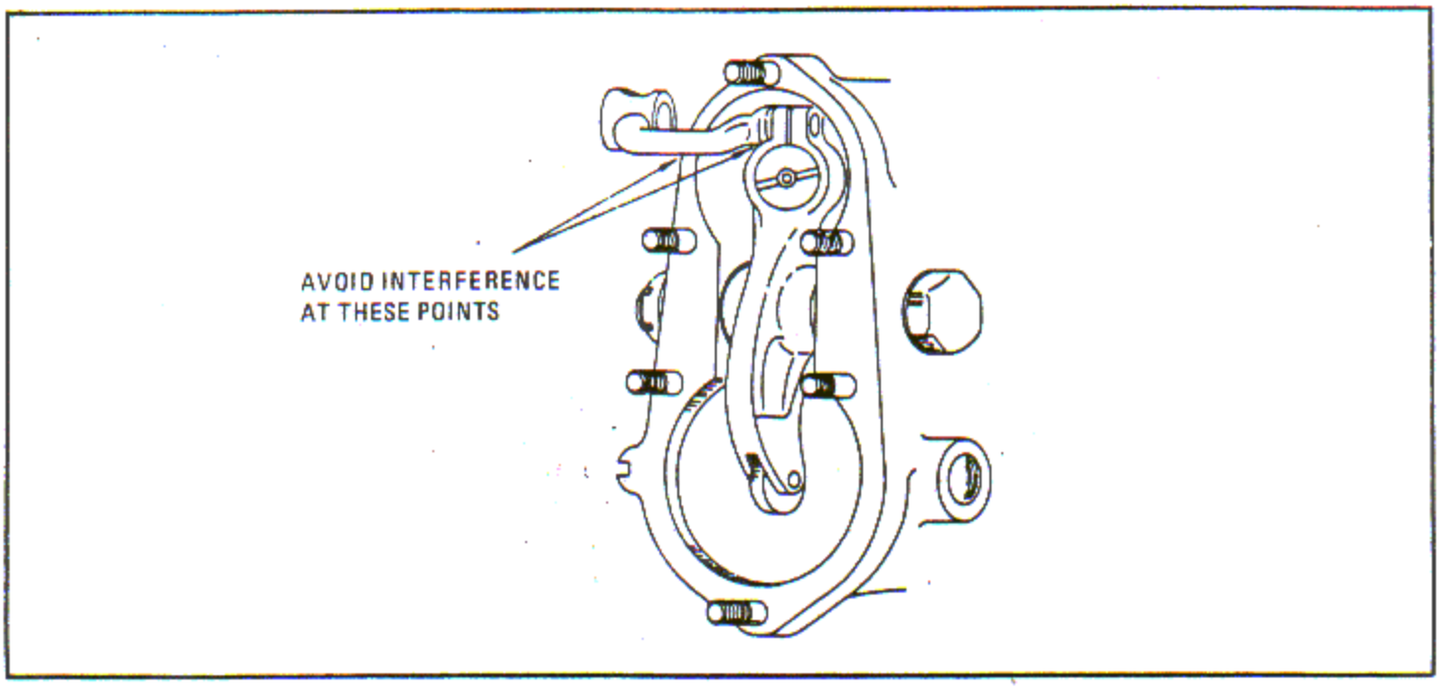

Figure 8-19. Torquing Adjusting Screw Lock Screw

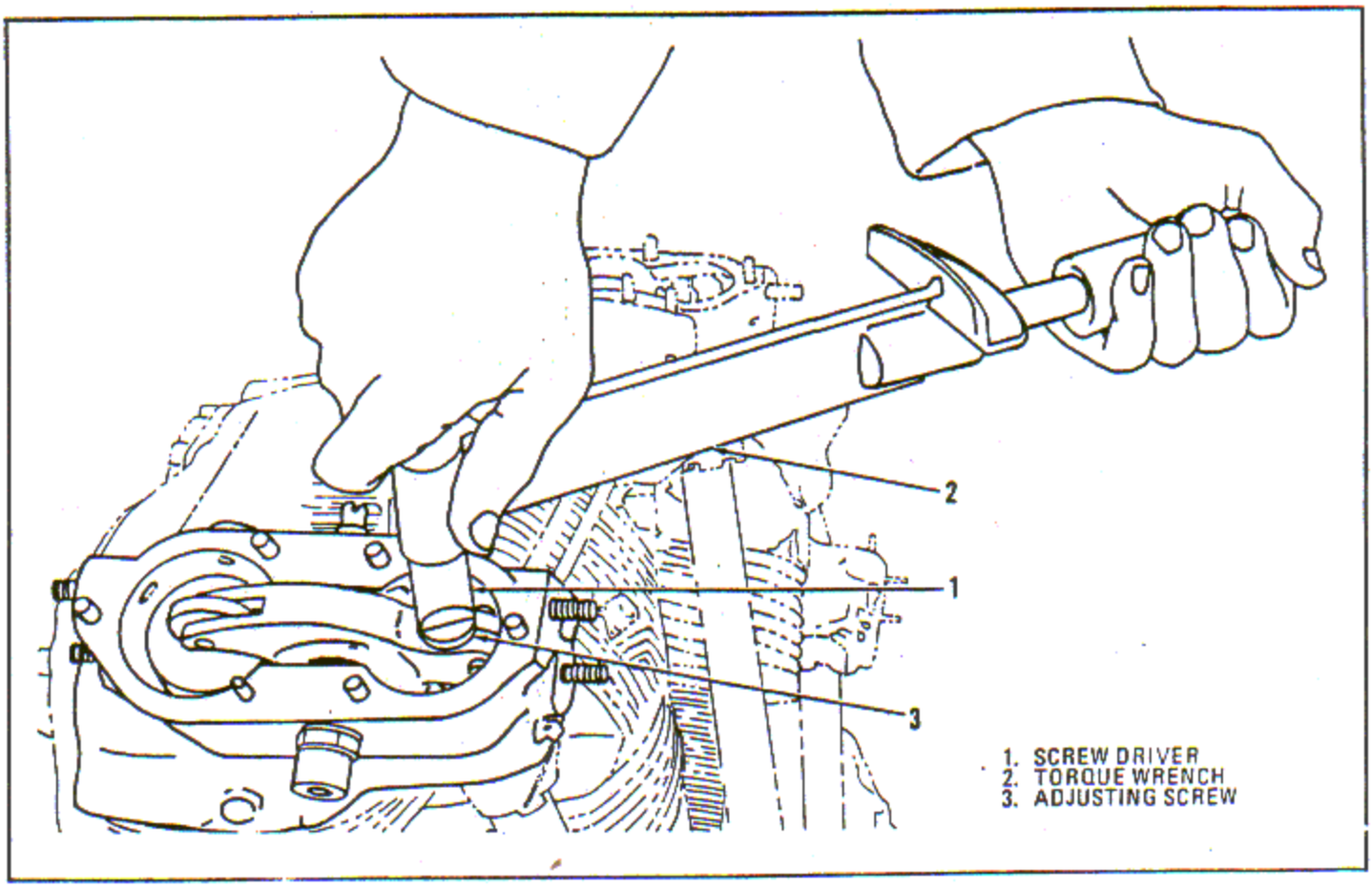

Figure 8-20. Checking Valve Clearance Adjusting Screw Breakaway Torque

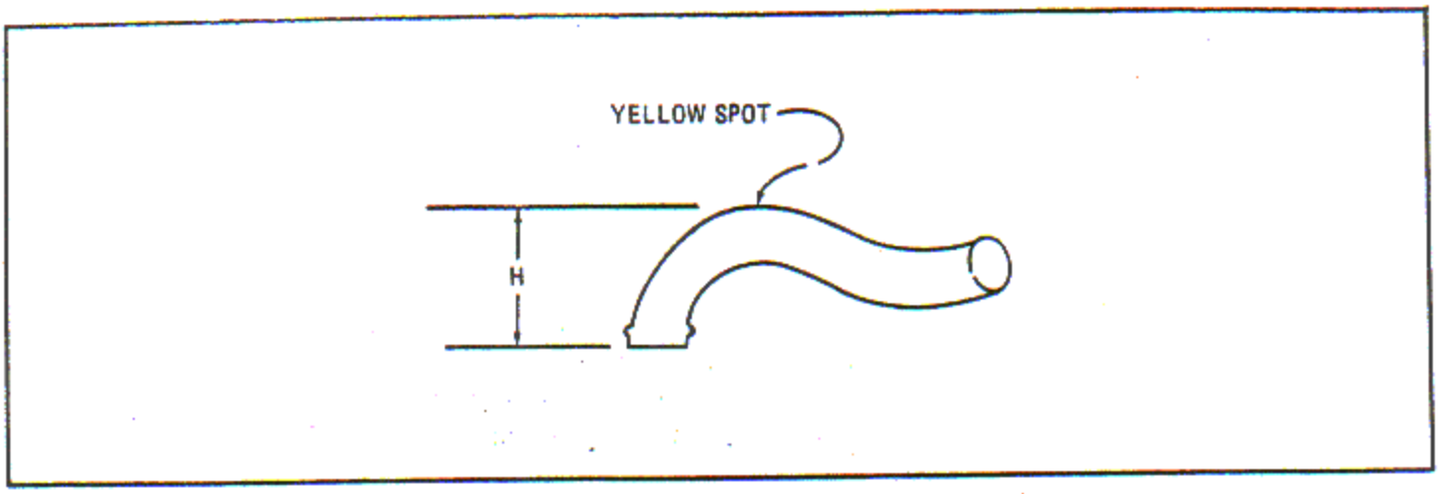

Figure 8-21. Upper Intake Pipes, Height Check

diagonally towards the ends. Torque the grommet and plate securing nuts to 35 - 50 inch-pounds.

f. Install the cylinder air deflector scoops between cylinders No. 2 and 3, 3 and 4, 7 and 8, and 8 and 9. Secure with fiber nuts and washers to the rocker box cover extensions and with screws and washers to the inter-cylinder air deflectors.

8-23. ROCKER BOX COVERS INSTALLATION (R1820-80 SERIES, -86A AND -86B). (See tool groups 122 and 124.)

a. Install the cylinder air deflector upper clamp grommets over the studs on the inter-cylinder deflectors. The grommet incorporates a slit on each side for the extensions on the rocker box covers.

b. Install new, clean, dry rocker box cover gaskets on all cylinders and install rocker box covers.

c. Push the rocker box cover extensions into the slits of the grommets. Install the rocker box cover washers and nuts using wrench. Install the plates over the deflector studs and against the grommets. Secure with fiber lock nuts.

d. Run down the nuts, using a suitable impact wrench and socket. Torque the nuts starting with the center nuts and then diagonally towards the ends. Torque the grommet and plate securing nuts 35 - 50 inch-pounds.

8-24. REAR SPARK PLUG INSTALLATION.

a. Index the engine with the propeller shaft in a down position. Ensure all openings are covered.

b. Install gaskets and spark plugs in accordance with instructions in GPPB No. 3.

c. Attach the rear spark plug ignition leads to the spark plugs and torque to the value specified in table 9-13, using applicable wrench.

8-25. INTAKE PIPES INSTALLATION. (See tool groups 33 and 72.)

NOTE

Upper intake pipes, P/N 116774 shall be checked on a height gage. See figure 8-21. If "H" dimension is small enough for the pipe to pass under the gage, mark the pipe with a small spot of yellow paint at the location shown. Only intake pipes marked with the yellow spot shall be installed in the No. 3 and No. 7 cylinder locations on the R1820-86A, -86B engines.

a. Remove the covers from the intake ports in the supercharger front housing and from the intake ports on the cylinders.

b. Coat the packing and the threads of the packing gland nuts with Federal Specification TT-A-580a, anti-seize compound. Install the packing

over the bead on the cylinder end of each intake pipe. Slide an attaching flange over each of the pipes not already so equipped and push the flange to the cylinder end of the pipe.

c. Place a new gasket on the cylinder intake port.

d. Insert the pipe into the packing nut in the supercharger front housing. Align the holes in the intake pipe flange and gasket with the cylinder intake port threaded holes. Secure with bolts and washers, using wrench.

e. Torque the attaching bolts at the cylinder port to 125 - 140 inch-pounds. Torque the intake pipe packing nuts to the value specified in reference 915, Table of Limits, Section IX, using wrench.

NOTE

Install intake pipes incorporating drain plugs in cylinders No. 4, 5 and 6.

8-26. SUPERCHARGER REAR HOUSING INSTALLATION. (See tool groups 65 and 131.)

a. Install eye on the starter pad adapter and attach a chain hoist. Raise the supercharger rear housing from the bench stand and position it above the engine. Test the impeller for freedom of rotation.

b. Coat the impeller shaft oil seal front sleeve with Federal Specification TT-A-580a, anti-seize compound. Stagger the ring gaps 180 degrees and center the rings using aligning tool shown in figure 8-22. Remove the tool.

c. Pour clean engine oil into the accessory drive and starter coupling and install a gasket on the rear parting surface of the supercharger front housing.

d. Lower the rear housing into position, one man operating the hoist while another guides the rear housing. Remove the chain hoist.

e. Install the ignition cable conduit brackets over studs No. 2 and 3, 19 and 20. Studs are numbered clockwise facing the rear of the supercharger front housing with No. 1 stud at the top center position.

f. Install the external oil supply front tube clamp bracket over studs No. 14 and 15.

g. Install the supercharger rear housing attaching washers and nuts. Torque the nuts to 275 - 300 inch-pounds. Do not install washers over the ignition cable brackets.

h. Remove the lifting eye from the starter pad. Place a gasket and substituting cover on the starter pad and secure with washers and nuts.

i. Tighten the ignition cable conduit bracket clamps around the conduits.

8-27. OIL SUMP EXTERNAL OIL TUBE INSTALLATION.

a. Place a new gasket on the forward end of the tube and a new oil seal ring at the rear end of the tube.

NOTE

On R1820-80B and -86B model engines, install an o-ring packing in the annulus in the rear oil pump housing where the drain tube connects instead of the ring at the rear end of the tube as stated above. Lubricate the packing with engine oil.

b. Loosen and back off the three rear oil pump outlet adapter attaching bolts far enough to allow the rear oil pump outlet adapter to be raised to permit installation of the external oil drain tube. See figure 8-23. (R1820-76 series engines only).

c. Position the tube to the rear pump and front sump and secure with the proper washers and bolts. Torque the bolts to 125 - 140 inch-pounds and lockwire.

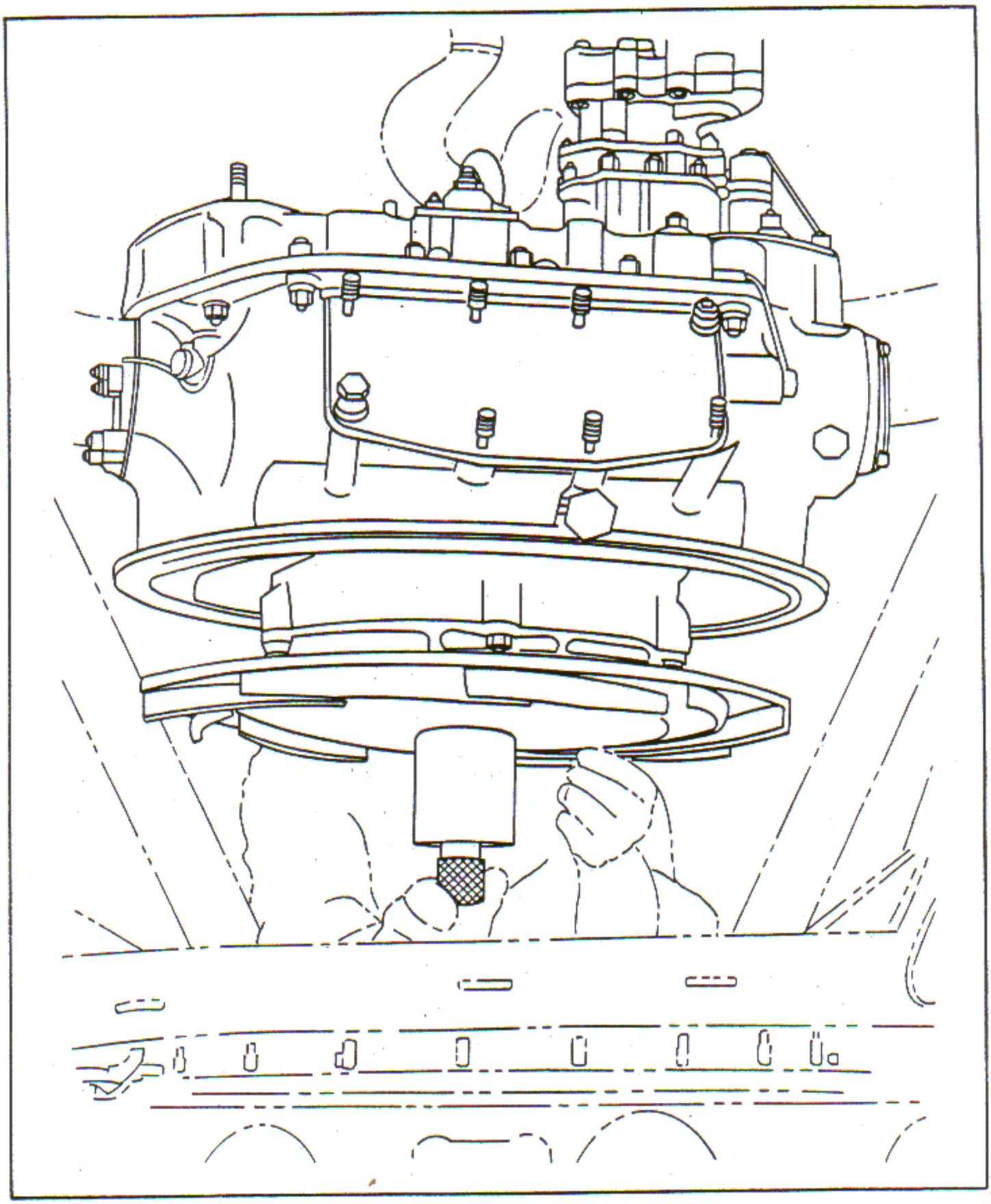

Figure 8-22. Aligning Impeller Front Oil Seal Rings

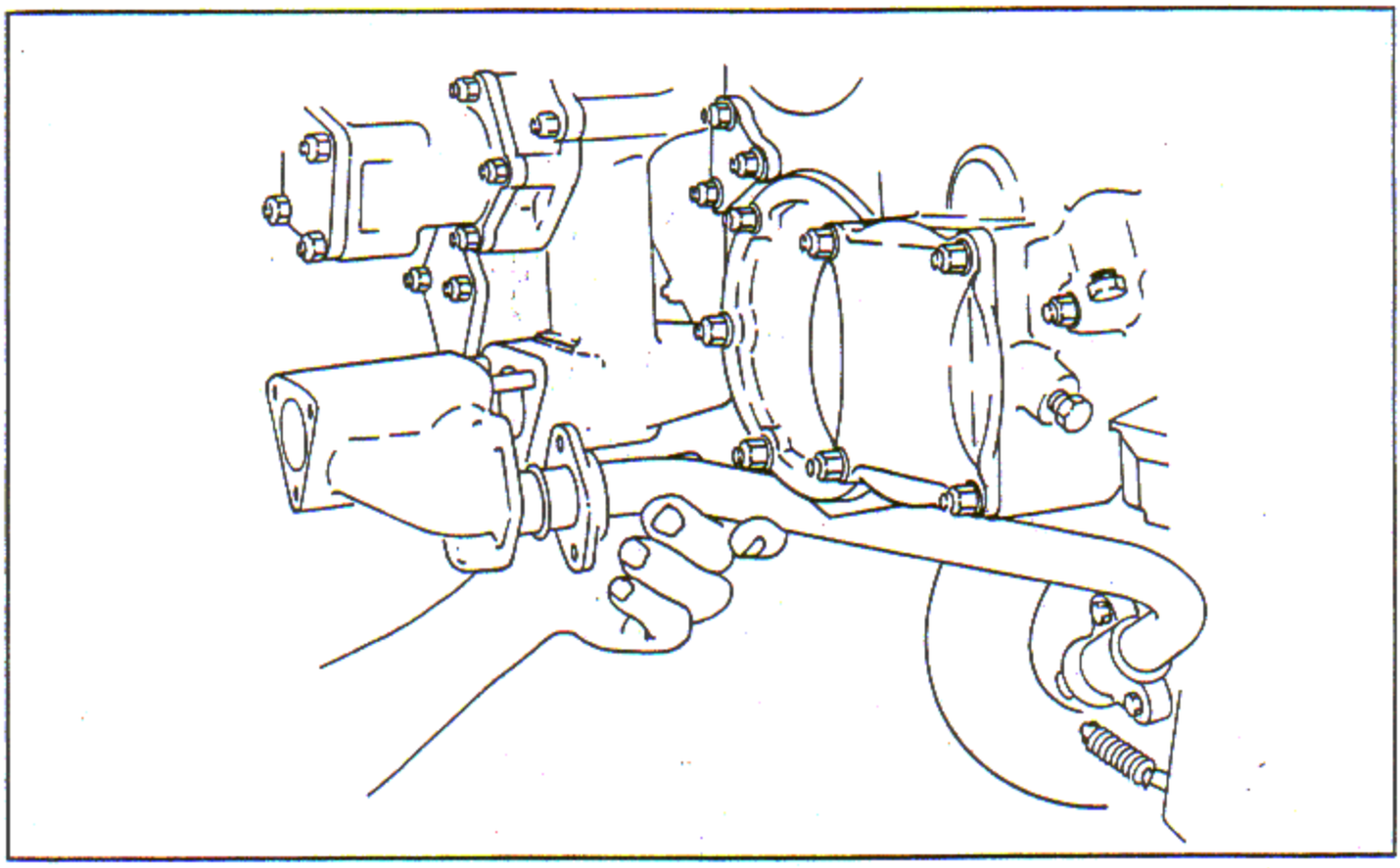

Figure 8-23. Installing Oil Sump External Oil Tube

8-28. EXTERNAL HYDRO-OIL SUPPLY REAR TUBE INSTALLATION.

a. The hydro-oil supply rear tube clamp bracket is installed under the supercharger rear cover attaching nut located to the rear of the oil strainer cover.

b. Install a gasket on the supercharger rear cover hydro-oil rear tube attaching studs located under left hand magneto mounting pad.

c. Install the rear hydro-oil tube flange over the studs, tighten the union that connects the front and rear tubes, secure the rear flange with fiber lock nuts and washers. Torque nuts to 125-140 inch-pounds.

d. Install clamps on front and rear tubes and attach to their brackets. The rear tube clamp and bracket assembly is shown in figure 8-24.

8-29. MAGNETO INSTALLATION. (See tool groups 42, 79 and 99.)

a. Loosen the lock screw on the clamp securing the breaker box cover to the magneto. Remove the clamp and cover.

b. Rotate the magneto drive shaft in the direction of normal rotation indicated by the arrow on the breaker cam until lobe No. 1, identified by a red dot, is about to open the breaker points. With the magneto shaft held in this position, the step on the cam must align with the mark on the timing post within 1/32 inch. This check is made with the aid of a straight edge. If the alignment is incorrect, select another magneto. No adjustment is permitted on the faulty magneto. Request disposition from the applicable ASO.

c. Check both magnetos in the aforementioned manner.

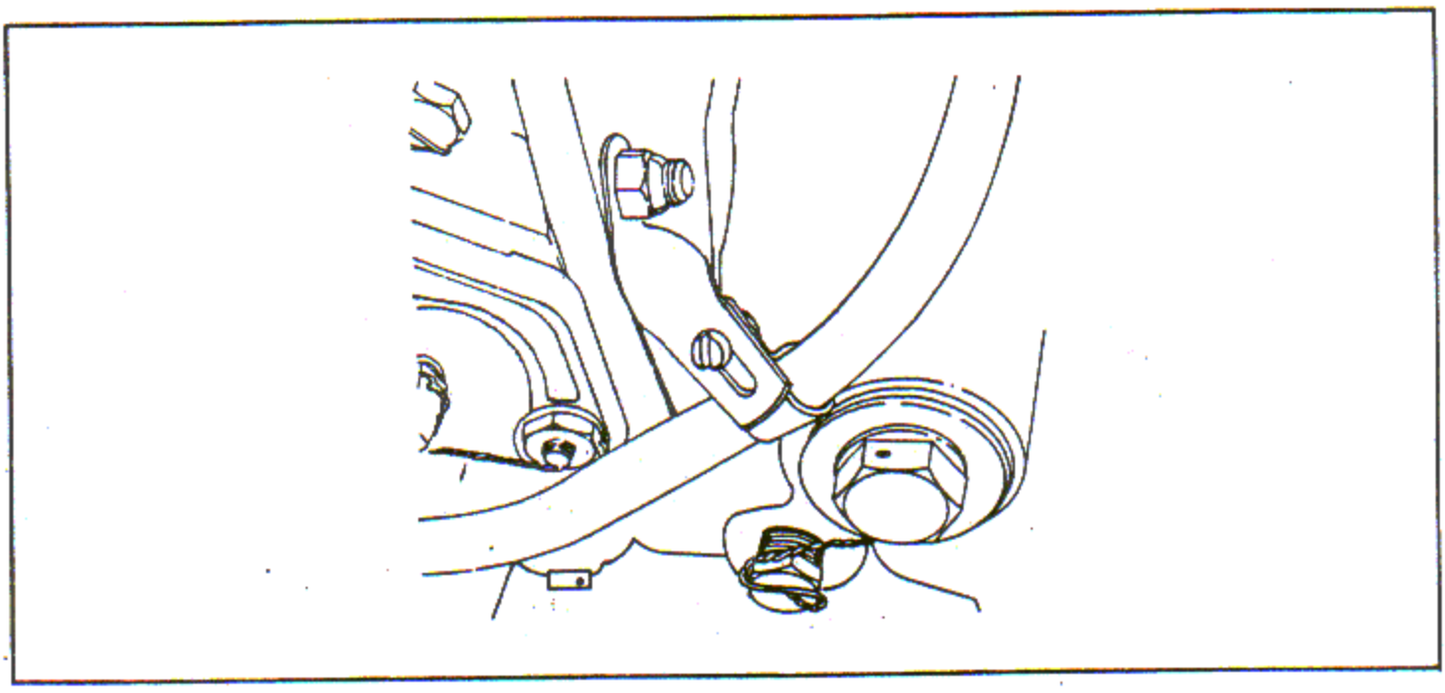

Figure 8-24. External Hydro-Oil Supply Rear Tube and Clamp

d. Turn engine to flight position. Remove the front dummy spark plug from No. 1 cylinder and turn the propeller shaft using turning tool until the piston in No. 1 cylinder is approximately 90 degrees before top center on the compression stroke.

NOTE

Prior to accomplishing any timing checks, check the contour of the pivot arm using the template as shown in figure 8-25. Check pivot arm applicability for the affected engine. Recheck the contour after the timing operation is completed.

e. Ensure that the spark plug gasket has been removed. Install the piston position indicator assembly (with the correct pivot arm and scale) in the (front) spark plug insert. The slot of the threaded end must be parallel with the vertical axis of the cylinder.

f. Place pivot arm and scale in position on the indicator cap assembly. Install the cap assembly in the body so that the slot in the cap is parallel with the body. The scale on the cap must be located to the right side of the slot.

NOTE

Whenever using an indicator scale whose sides are identified as 2A and 2B, the 2B scale only is to be used on all R1820 engines. The 2A scale should be obliterated unless required for use with other engines.

g. Rotate the propeller shaft in the direction of normal rotation so that the piston in No. 1 cylinder goes through top center position to approximately 90 degrees after top center.

NOTE

This will leave the slide pointer near the bottom of the slot which corresponds to the position of the piston when it passed through top center.

h. Without disturbing the position of the slide pointer, set the "O" mark on the scale opposite the mark on the slide pointer.

i. Push the slide pointer toward the top of the slot until it rests against the pivot arm, and then rotate the crankshaft approximately 180 degrees opposite the direction of normal rotation.

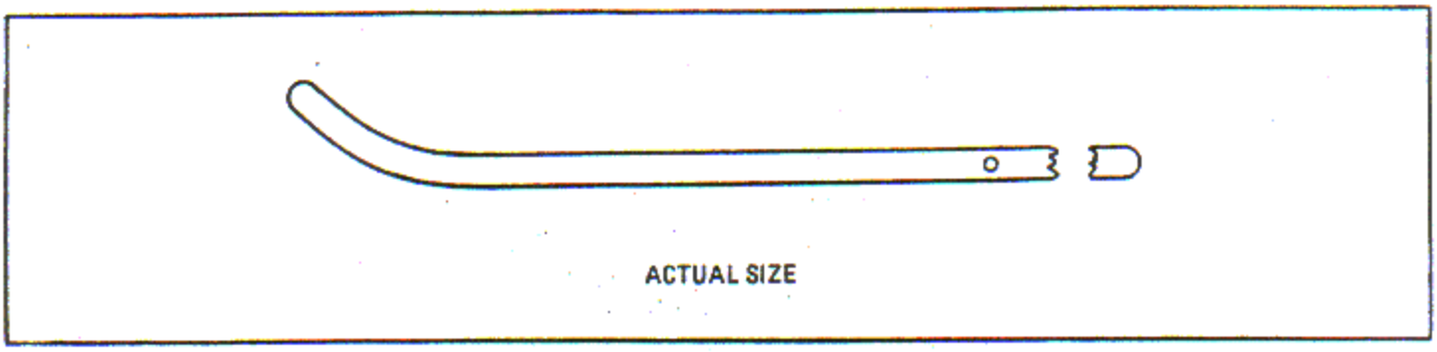

Figure 8-25. Pivot Arm Template

j. The slide pointer should now be opposite the "O" mark on the scale. If it is not, repeat the previous steps.

k. Position the slide pointer so that it is aligned with the 20 mark on the scale.

l. Slowly rotate the crankshaft in the direction of normal rotation until the pivot arm contacts the slide pointer. See figure 8-26. The light in the piston indicator will go on when this occurs, indicating the No. 1 piston is at 20 degrees before top center on the compression stroke.

NOTE

The slide pointer may be moved away from the pivot arm, to conserve battery power, once the piston is located at the basic timing position.

m. Lubricate the magneto drive shaft coupling splines and the magneto drive gear splines as instructed in paragraph 7-2, step k. Align the step on the cam with the mark on the timing post using a straight edge. See figure 8-27. Place the magneto on the mounting studs and rotate it to its extreme clockwise position. The points should be closed. Move it to the extreme limit of travel in the counterclockwise direction. The points should be open. If these requirements are satisfied, secure the magneto lightly to the engine, positioned in the extreme clockwise limit of travel.

n. If the breaker points do not function properly, remove the magneto from the engine and make the following adjustments. Turn the magneto shaft in the direction of normal rotation one complete revolution so that the step on the cam again aligns with the mark on the timing post. This slightly alters the relative position of the magneto drive shaft coupling and the breaker cam. Place the magneto on the engine and check for breaker point action as before. If the points still do not function properly, turn the shaft another revolution and realign the cam with the timing post. This may be done a total of four times.

o. If breaker point action is still not satisfactory, remove the magneto from the engine and remove the cotter pin from the drive shaft coupling. Using wrench on the splines, remove the coupling nut. See figure 8-28. Remove the coupling and reinstall it one spline in advance of its original position. Reinstall the nut finger tight. Repeat the check for breaker point action. If necessary, continue shifting the coupling one spline at a time until proper breaker point action is obtained. When proper breaker point action is obtained, tighten and torque the coupling nut to 120-240 inch-pounds and install a cotter pin.

p. When correct operation of the breaker points is obtained insulate the ground spring of the magneto by inserting a piece of clean cardboard beneath the spring.

q. Disconnect the primary coil lead from the magneto breaker points and reinstall the screw which secured the lead. Connect a lead to one of the test jack receptacles on the left side of the piston position indicator. Connect the alligator clip end of the lead to the primary coil lead attaching screw. See figure 8-29. Since the magneto is positioned to close the breaker points,

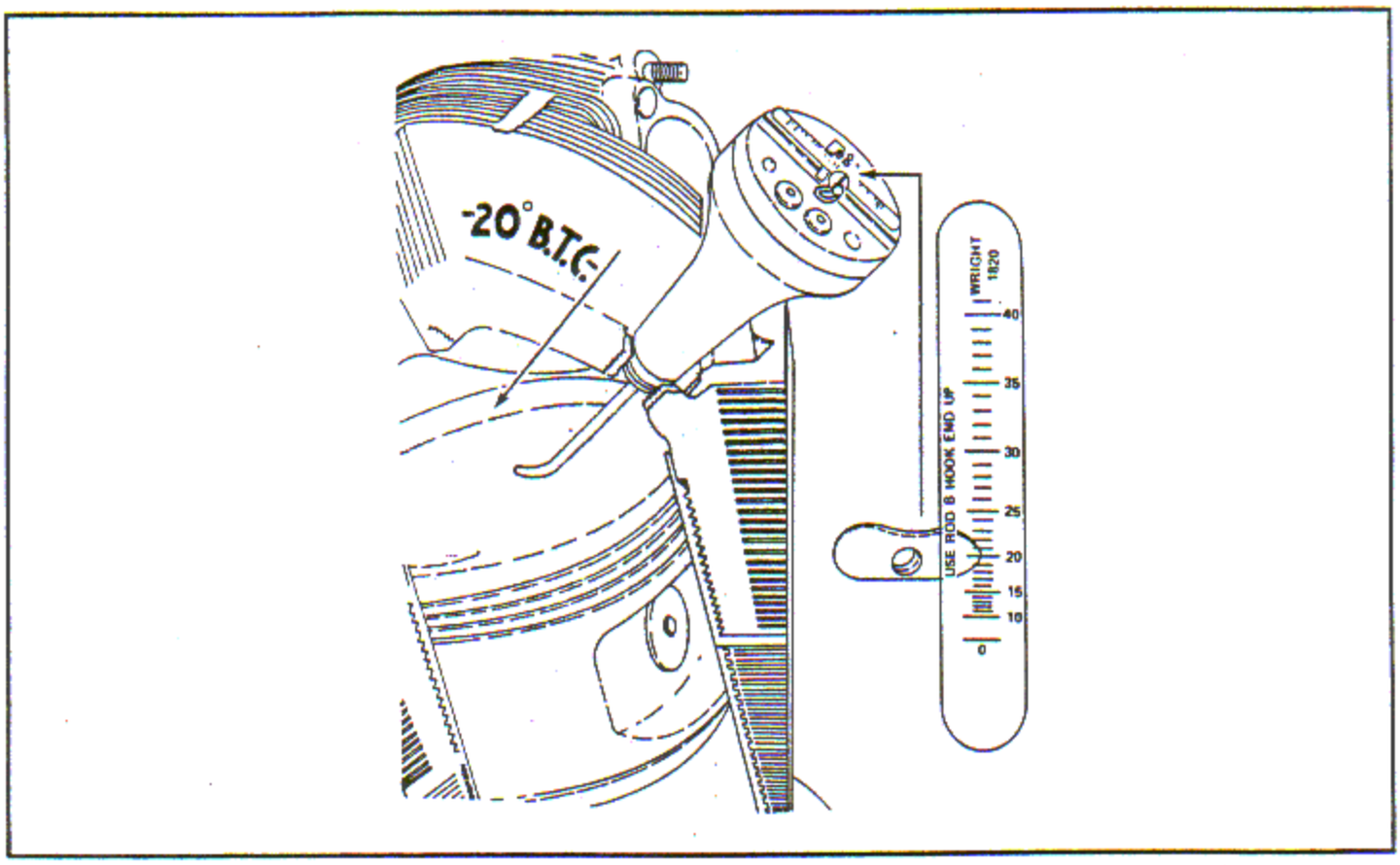

Figure 8-26. Piston Position Indicator at 20 Degrees Before Top Center

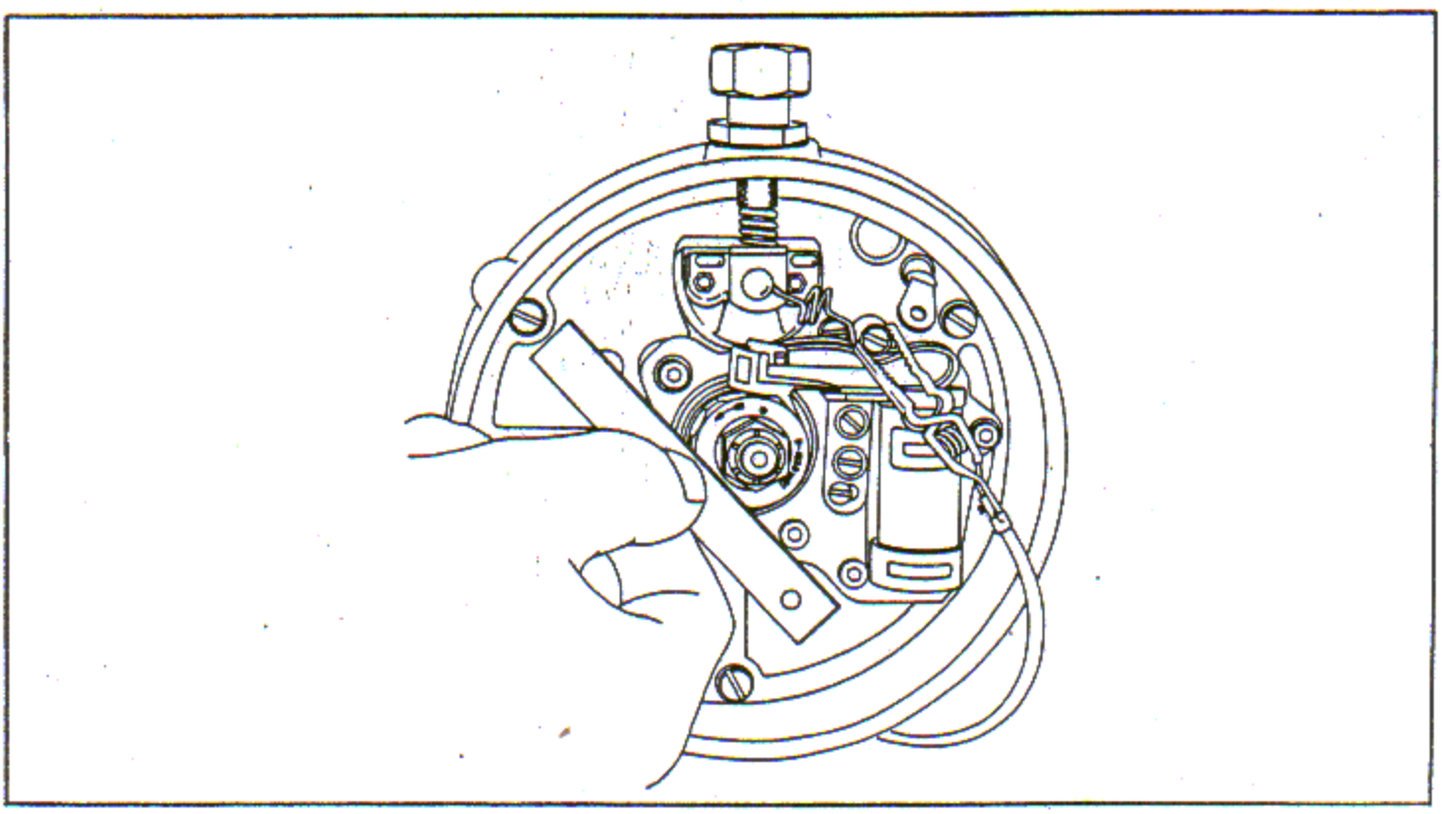

Figure 8-27. Aligning Step on Cam to Timing Post with Straight Edge

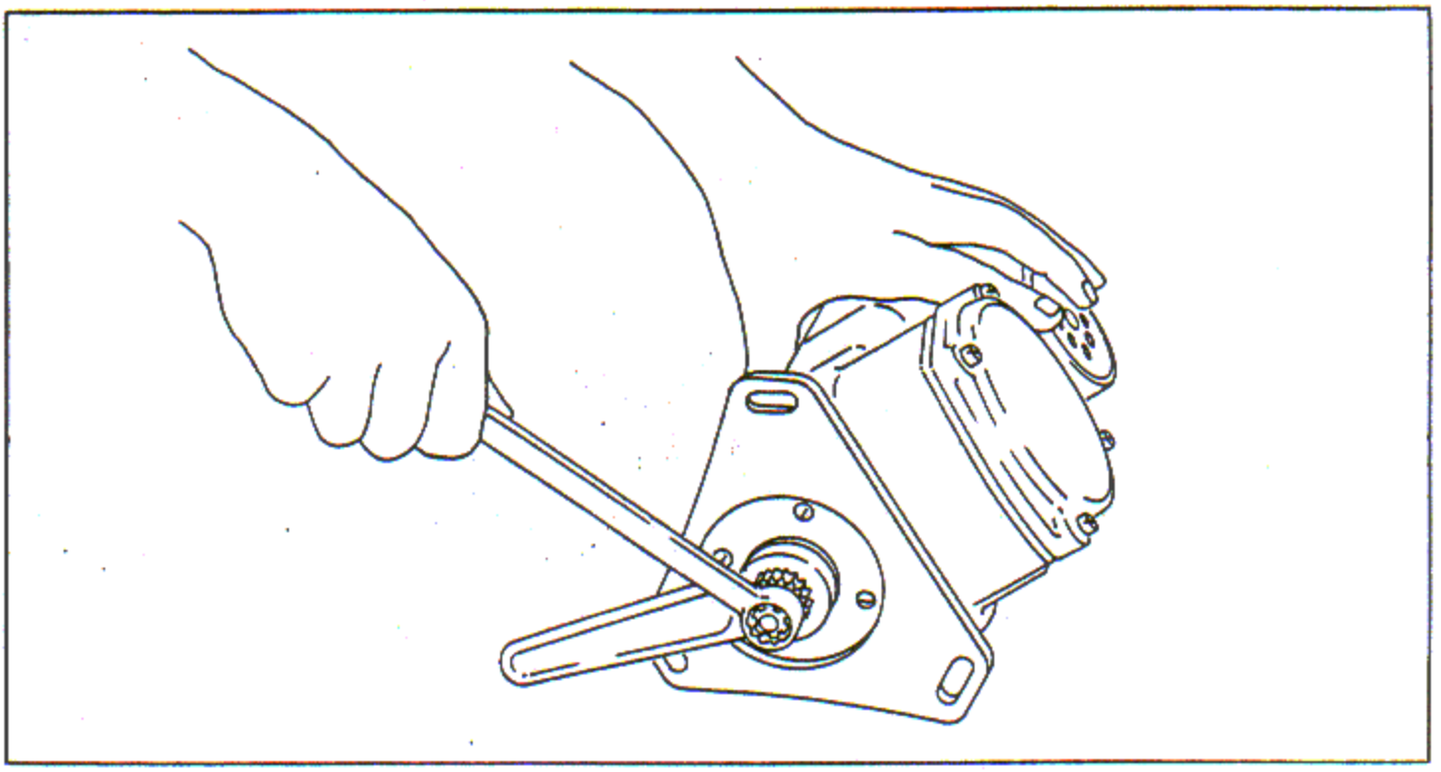

Figure 8-28. Removing Magneto Drive Shaft Coupling Nut

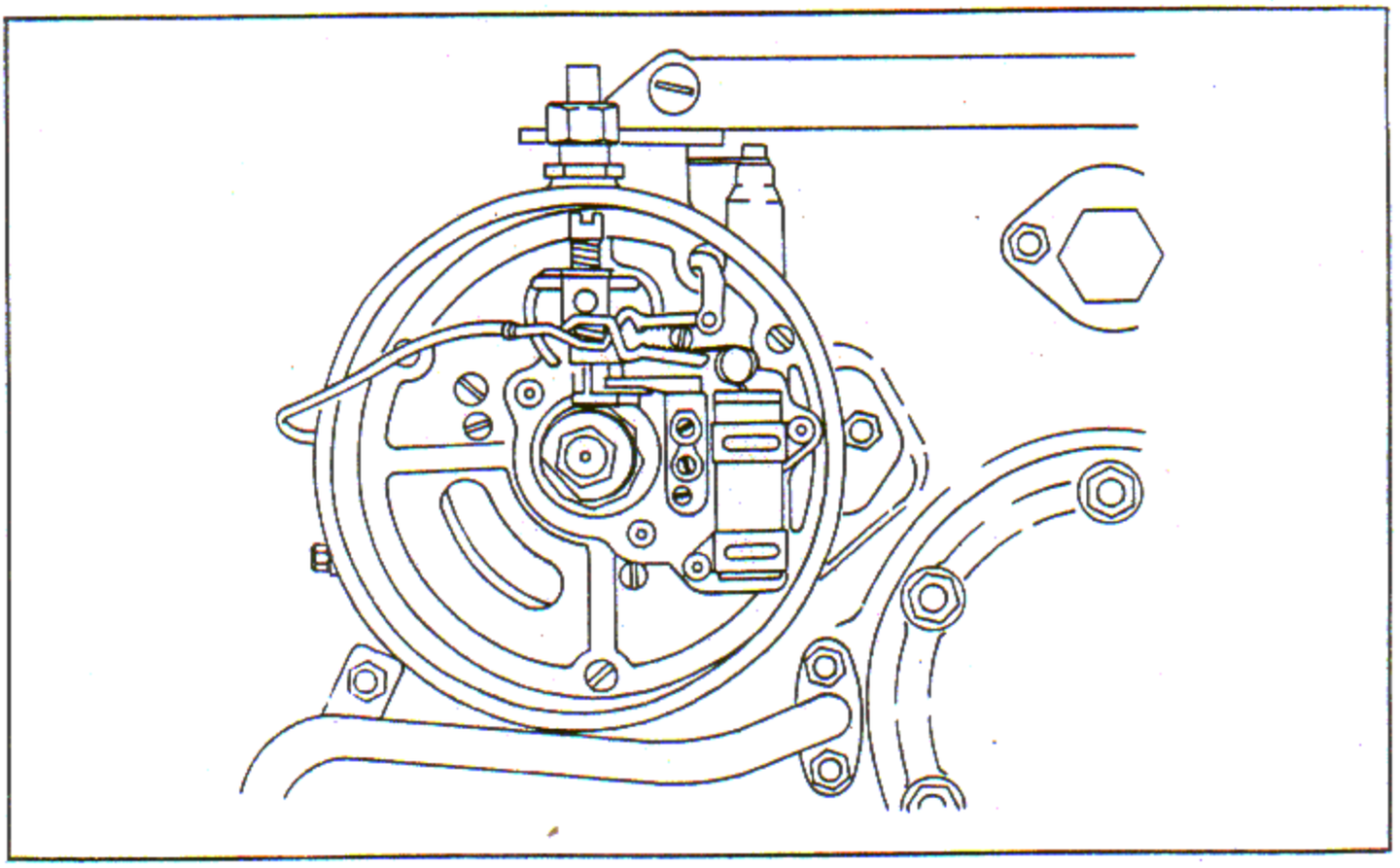

Figure 8-29. Lead Attached to Primary Coil Attaching Screw

the light in the cap of the piston position indicator connected to the points will be on.

NOTE

In order to conserve the small battery in the piston position indicator, connect the positive terminal of a supplemental battery of similar voltage to the screw on the indicator scale friction spring. Connect another wire from the negative side of the battery to ground.

r. Move the magneto gently with the palm of the hand causing it to rotate counterclockwise until the instant the light on the indicator goes out. This indicates the points have just started to open. Tighten the magneto.

NOTE

The indicator light operation is in accordance with the instructions as supplied by the manufacturer of the Time-Rite equipment (Gabb Special Products Inc., Canal Bank, Windsor Locks, Conn.). Other timing equipment than Time-Rite may indicate opening of the breaker points by the timing light going on. Refer to the manufacturers instructions.

s. Install other magneto in same manner.

t. Check the synchronization of both magnetos. Ensure that both magnetos are connected to the piston position indicator.

u. Check for synchronization of the points of both magnetos by turning the propeller shaft a few degrees opposite the direction of normal rotation. Then slowly turn the shaft in the direction of normal rotation. Both lights should go out simultaneously when the slide pointer is opposite the 20 degree mark on the scale. Adjust the magnetos if necessary.

NOTE

The position of the breaker points was determined during magneto overhaul to ensure proper cam dwell and point gap. It is not permissible to alter the position of the points to obtain magneto synchronization.

v. Disconnect the timing light wires from the magnetos and reconnect the primary coil leads. Remove the cardboard insulation under the ground springs. Replace the breaker box covers and clamps. Tighten and torque the nuts to 40 inch-pounds. Apply DC-200 compound to the magneto connector blocks.

CAUTION

Do not use DC-4 compound on connector blocks as it tends to deteriorate the silicon ignition wires of the harness.

w. Insert the main conduit elbows into the magneto connector receptacles. Install the elbow clamps and tighten the screws to 25 - 30 inch-pounds. Lockwire the elbow screws. Tighten the nuts connecting the elbows to the harness conduits using a suitable spanner wrench and lockwire to the elbow screws.

x. Before removing the Time-Rite Indicator from the cylinder at the conclusion of the timing operation, continue to rotate the propeller shaft so that the piston again passes through the top center position. Check the scale; the indicator should point to zero.

y. If the indicator does not return to zero, remove the indicator and check the contour of the pivot arm using the template shown in figure 8-25. Recontour or replace the pivot as necessary, and repeat the timing operation.

z. Remove the piston position indicator from cylinder No. 1 and replace the dummy spark plug. Remove the propeller shaft turning tool.

8-30. FRONT SPARK PLUG AND IGNITION LEAD INSTALLATION. Prepare and install the front spark plugs and ignition leads in the manner described for the rear spark plugs in paragraph 8-24.

8-31. PRIMING SYSTEM INSTALLATION.

a. If the priming tube fitting was removed from the priming valve solenoid housing, reinstall the fitting using a new gasket under the

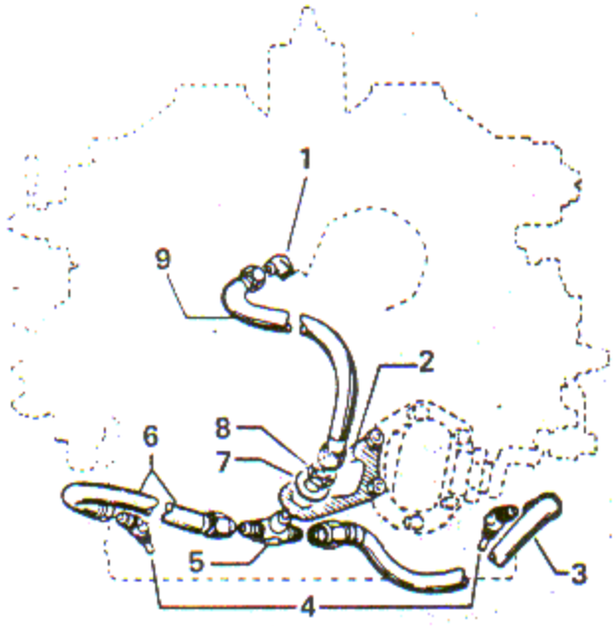

1. PRIMING VALVE TO TUBE ELBOW
2. CARBURETOR PRIMING TUBE BRACKET
3. PRIMING CONNECTION TEE TO PRIMING ADAPTER RIGHT HOSE AND FITTING
4. PRIMING TUBE TO CARBURETOR ADAPTER ELBOW
5. PRIMING VALVE TEE
6. PRIMING CONNECTION TEE TO PRIMING ADAPTER LEFT HOSE FITTING
7. CARBURETOR PRIMING TUBE CONNECTION TEE WASHER
8. TEE TO PRIMING TUBE BRACKET NUT
9. CARBURETOR TO PRIMING TUBE CONNECTION TEE HOSE AND FITTING

Figure 8-30. Priming Tube Installation

housing cover and secure it with six attaching nuts.

b. Examine the priming tube nipples to ensure they incorporate a 0.084 - 0.091 inch restriction. Apply compound, Military Specification MIL-T-5544, to the threads of the nozzles ensuring the compound does not contact the nozzle ends.

c. Install the bracket (2, figure 8-30) with the bulkhead tee (5) on the two lower left hand acceleration pump cover bolts as shown. Torque the nuts to 30 - 40 inch-pounds. Connect the priming hose fitting (3) to the elbow fitting (4) in the solenoid housing.

d. Attach the fitting at the other end of the tube to the bracket and tee connection. Install the right and left hose lines to their respective elbow fittings in the carburetor adapter. Connect the right and left hose lines to the tee fitting at the bracket. Tighten all nuts. See figure 8-30 for priming tube installation.

NOTE

Ensure that the tee fitting is adjusted to prevent the hose lines to the priming nozzles in the carburetor adapter from chafing against adjacent parts.

8-32. CARBURETOR INSTALLATION. (See tool group 13.)

a. Remove the cover from the carburetor mounting pad on the engine and install a new gasket on the pad.

b. Position the carburetor on its mounting studs. Tilt the carburetor toward the rear and install two spherical washers 2093D43 or 2093D7 and two self locking steel nuts 6087D7 on the studs located at the two forward corners on the mounting flange. Run these down far enough to allow the carburetor to seat squarely on the engine mounting pad.

c. Install spherical washers 2093D43 or 2093D7 and locking nuts 6087D7 on the remaining studs. Torque the nuts to 275 - 300 inch-pounds using box wrench or open end wrench, and a suitable torque wrench.

NOTE

Retorque the carburetor hold-down nuts after 10 hours of engine operation following initial carburetor installation. Retorque at each calendar inspection.

8-33. PROPELLER SHAFT HYDRO-OIL CONNECTION NUT TORQUING. (See tool group 103.)

a. Turn the engine to flight position.

b. Remove the propeller shaft hydro-oil connection nut lock. Torque the nut using wrench and a suitable torque wrench. Torque to value given in reference 900, Table of Limits, Section IX.

c. Reinstall the nut lock so that the lugs on the lock are located in the grooves on the inside of propeller shaft and the holes in the lock plate align with the holes in the nut. The lock can be rotated or reversed until the holes align. Secure the lock with the three screws. Torque to 18-20 inch-pounds and lockwire the three screws together.

8-34. PROPELLER SHAFT THRUST BEARING NUT, EXAMINATION AND REWORK OF.

a. Examine thrust bearing nut front face for wear or damage. Front face and rear face must be parallel to each other within 0.002 inch. Several light pits and/or scratches shall not be cause for rejection unless warranted by other factors as excessive wear, excessive galling, etc.

b. Thrust bearing nuts may be ground on the front face as necessary to correct for these unsatisfactory conditions providing this rework can be accomplished without reducing the overall width of the nut below 0.910 inch.

c. If rework in excess of the 0.910 inch minimum width requirement is indicated, reclaim the thrust bearing nut by chromium plating in accordance with instructions in paragraph 6-874.

d. Axial dimension between the front face of the thrust bearing nut and the reference point on the propeller shaft, as specified in reference one in the Table of Limits, must be obtained when the engine is assembled, regardless of thrust bearing nut rework.

8-35. PROPELLER SHAFT THRUST BEARING NUT TORQUING. (See tool groups 99 and 104.)

a. Install protector. Use wrench to torque the thrust nut. Assemble suitable housing to adapter A.

b. Slide the assembly over the propeller shaft splines and engage the adapter in the thrust nut provisions.

c. Engage the adapter B to the splines of the propeller shaft. Ensure that the ball arm of the adapter is at the left, as viewed facing the front of the engine, and that the pointer at the top of the adapter is at the right limit of travel as indicated on the scale on the housing.

d. Screw a suitable jack and gage assembly into the hole provided at the left side of the housing.

e. Close the relief valve on the jack and gage assembly. Build up pressure on the jack ram by operating the jack handle. See figure 8-31. Hydraulic force acting against the ram in contact with the ball arm of the adapter causes the jack housing and thrust nut adapter to turn clockwise, tightening the thrust bearing nut.

f. Torque the nut to the value indicated in reference 908, Table of Limits, Section IX. Axial dimension between the front face of the thrust bearing nut and the reference point on the propeller shaft as specified in reference 1, Table of Limits, Section IX, must be obtained when the engine is assembled.

NOTE

The gage reading must be taken when the pointer position on the top of the housing is within the graduated limits.

g. If sufficient torque has not been obtained when the pointer is at the limit of travel, release the ram pressure, remove the splined adapter, and reinstall it as outlined in step c.

h. When the thrust bearing nut has been torqued within proper limits, release the relief valve screw, unscrew the jack and gage assembly and withdraw the complete wrench assembly.

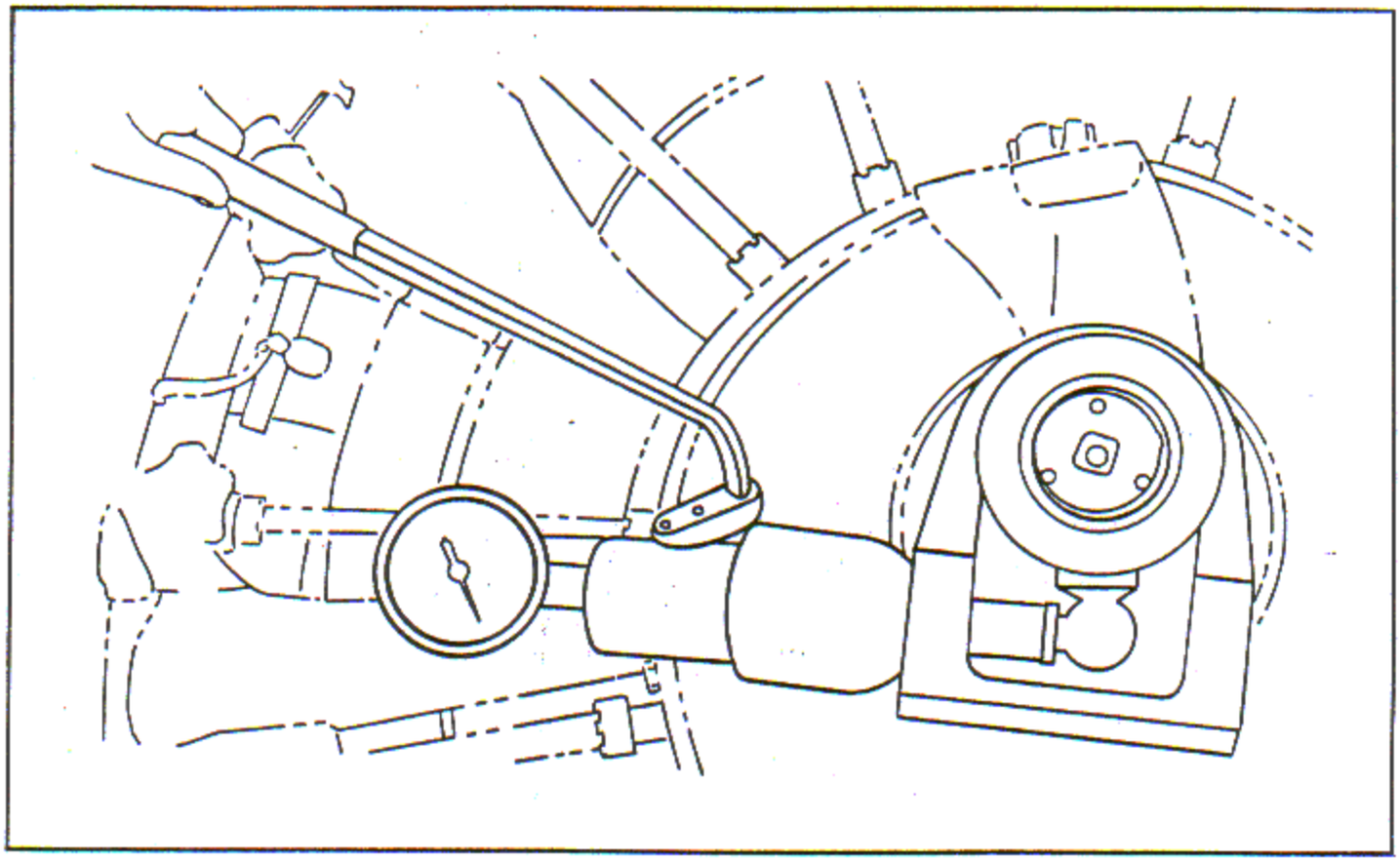

Figure 8-31. Tightening Thrust Bearing Nut

SECTION IX

DIMENSIONAL LIMITS AND TORQUE VALUES

9-1. TORQUE WRENCH INSTRUCTIONS. Torque wrenches must be calibrated at frequent intervals, using weights and a measured lever arm to preclude inaccuracies due to mishandling or to considerable usage. Do not check one wrench against another.

9-2. PRE-LUBRICATION.

a. Torque values are usually established on the basis of application with engine oil. The presence of other lubricants such as slushing oil or other forms of anti-corrosion compounds will have an adverse effect on the desired clamping loads. Parts should be cleaned in a petroleum solvent prior to application of engine oil.

b. Torque values specified for hose and fitting assembly installation (threaded coupling without gasket or seal) are based upon pre-lubricated mating parts. Dry hose connections will result in a false torque indication with possible consequences of ineffective coupling seal and increased susceptibility to seat damage, wear and scoring. Prior to hose installation, lubricate the threads of mating parts with a light film of oil. In all fuel system applications use oil, Military Specification MIL-L-6081, Grade 1010 or equivalent. Lubricate fittings associated with oil or air systems with engine oil applicable to the particular engine model involved. Spark plug lubricant shall conform to Military Specification MIL-C-6529, Type III oil, unless otherwise specified.

9-3. TORQUING INSTRUCTIONS. Torque values are in inch-pounds. Apply all force slowly and evenly until the specified torque is reached. Hold the torque wrench at this value until the nut, bolt, screw or other device has stopped turning. Selection of parts may be necessary to permit alignment of some locking device within the specified torquing range. Torque values not specifically given in the test can be found in the Tables of Tightening Torque Values.

9-4. TORQUE WRENCH EXTENSIONS. Torque wrench extensions may be used with any type or length of torque wrench. Since such extensions change the length of the torque arm for which the scale is calibrated, the torque actually being applied at the end of the extension is not reflected in the scale reading and must be calculated.

NOTE

When using torque wrench extensions the greatest accuracy will be obtained by applying the manual force at the calculated arm length, which is the center of the handle.

a. To determine the applied torque on a nut, bolt or screw from the observed scale reading, see figure 9-1, use the following formula.

b. Since $\frac{L + L_1}{L}$ is always greater than one, the applied torque is always greater than the observed scale reading when an extension is used.

c. To determine the correct scale reading for a desired torque at A, use the following formula:

$$\text{Scale Reading} = \frac{L}{L + L_1} \times \text{Desired Torque A}$$

$$\text{Applied Torque (A)} = \text{Scale Reading} \times \frac{L + L_1}{L}$$

d. Since $\frac{L}{L + L_1}$ is always less than one, the scale reading will always be less than the applied torque at A.

NOTE

When substituting values in the above formula use inch units throughout to obtain an answer to inch-pounds and use foot-pounds.

e. To assist the operators in the use of these torque wrench extensions, the L_1 length should be stamped on the tool itself. It will then be necessary only to determine the length of the torque wrench (L) to solve the above equations as applicable.

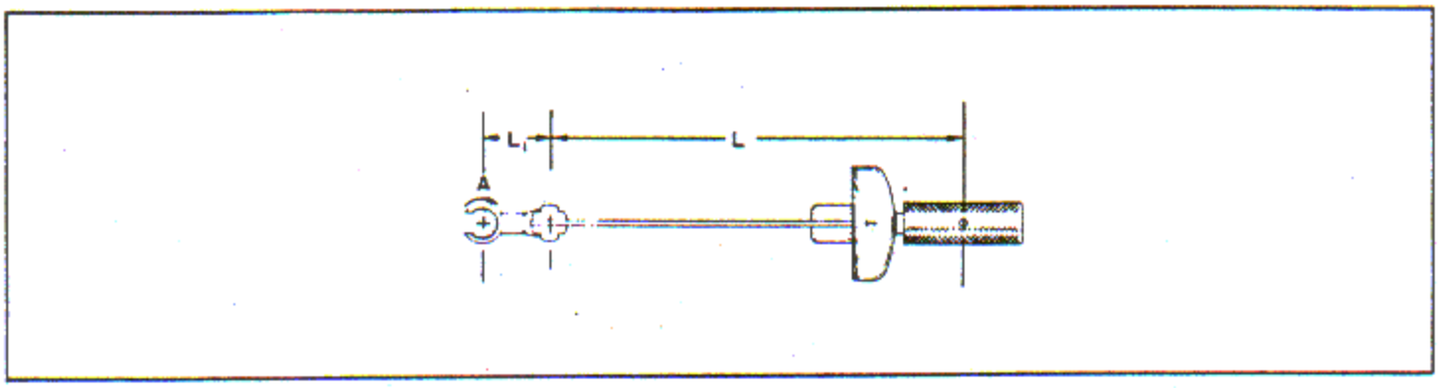

Figure 9-1. Torque Wrench with Extension

9-5. ALIGNMENT OF LOCKING PIN HOLES. Align lock pin holes as follows.

a. Tighten the nut to the minimum torque value specified. If the holes do not align, continue to tighten until proper alignment or maximum torque value is reached. In no instance exceed the maximum torque value.

b. If alignment cannot be obtained within the specified torque values, back off the nut and repeat the instructions in step a. If the holes do not align after retightening, repeat the tightening procedure using another nut.

c. In the case of locking devices other than pins, selection of parts may be necessary to obtain the locking position within the specified torque value.

9-6. TABLES OF TIGHTENING TORQUE VALUES. Tightening torque values are specified in the following Tables 9-1 through 9-14. The values specified in Tables 9-11 and 9-14 are considered to be standard practice for special applications. Torque values specified in all other tables are standard practice. Torque values covering special cases which are exceptions to the above will be found under reference numbers beginning with 900 in the Table of Limits.

NOTE

There may be some instances or situations arising which are not covered by, or are exceptions to those given in the following tables. In all such cases exercise common sense and good sound judgment.

9-7. STUD INSTALLATIONS. Studs may be installed as follows.

a. Unless otherwise specified apply anti-seize compound composed of by weight 75 per cent petrolatum melting point 49 - 60°C (120 - 140°F) and 25 per cent graphite powdered flake to the stud threads. Use only sufficient lubricant to cover the sides of the threads with a thin layer.

b. Select a tap which will produce a hole that permits the driving of the stud within the torque limits specified in Tables 9-1 and 9-2. When tapping stud holes in cast aluminum, forged aluminum, cast magnesium and nodular cast iron it is permissible to tap the hole 0.0025 inch over drawing dimensions in order to meet torque requirements for installing the studs.

NOTE

It is extremely important that the accuracy and smoothness of the threads and the accuracy of the lead threads be maintained in order to keep the driving torque within specified requirements.

9-8. The amount of press fit required for driving a stud within the specified torque limits varies. In soft cast aluminum, a maximum press fit is required, and the press fit requirement decreases as the hardness of the metal is increased. However the press fit in magnesium is less than in aluminum for a given hardness of the material.

9-9. Tables 9-1 and 9-2 are a guide for driving studs. The figures in the Pitch Diameter of Tapped

Hole column may vary to suit the condition of the assembly. The holes may be tapped larger or smaller than indicated in the table in order to obtain the torque required; however, the hole should be maintained within drawing specifications except as noted in paragraph 9-7.

9-10. SCREW BUSHING INSTALLATION.

a. Assemble screw bushings with a driving torque equal to or greater than the minimum torque value specified in Table 9-3. Unless otherwise specified, apply anti-seize compound composed, by weight, of 75 per cent petrolatum, melting point 49 - 60°C (120 - 140°F) and 25 per cent graphite powdered flake to the bushing threads. Use only sufficient lubricant to cover the sides of the threads with a thin layer.

b. Select a tap which will produce a hole to permit driving the screw bushing at a driving torque equal to or greater than the minimum torque value specified in Table 9-3.

NOTE

In order to facilitate installation it is permissible to tap a hole a maximum of 0.002 inch over drawing dimensions. However do not tap the hole so large that the driving torque is reduced to a value less than that specified.

9-11. TAPER PIPE THREAD PLUG INSTALLATION. Unless otherwise specified, sparingly apply anti-seize compound, Specification MIL-T-5544, to the male threads of the plug. Wipe away any excess material and install the plug. Torque to the value specified in Table 9-4.

9-12. LIMITS.

9-13. TABLES OF LIMITS. The Table of Limits in conjunction with the Limits Charts are compiled to give important information about fits between mating parts, clearances between adjacent parts, ring gaps, backlash on gears and torque values used during inspection and assembly of the engine. Reference numbers in the Tables apply to the same numbers on the Limits Charts and descriptions in the Tables identify the fit locations. Blueprint minimum and maximum fits are design measurements within which new engine parts must fall. Service limit replacement fits, along with the applicable blueprint minimum and maximum design measurements, are the measurements within which used engine parts must fall. All measurements are in inches unless otherwise specified.

9-14. LIMITS CHARTS. The Limits Charts at the end of this section shown the particular location of the fits listed in the Table of Limits. They are line drawings of the engine basic assembly. Each location, where applicable, will have a reference number. Scale measurements should never be taken from these views for any mechanical purpose. The charts are shown in figure 9-2 sheets 1 through 7.

TABLES OF TIGHTENING TORQUE VALUES

TABLE 9-1

STEPPED STUDS					STRAIGHT STUDS			
Types X and Y are Driven From Nut End Type Z is Driven from Flat on Stud End		Type X	Type Y	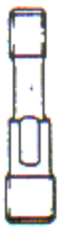 Type Z	Type X is Driven from Nut End Type Z is Driven from Flat on Stud End		Type X	Type Z
Stud Size		Torque Value Inch-Pounds			Stud Size		Torque Value Inch-Pounds	
Stud End	Nut End				Stud End	Nut End		
Hand Driven								
-	-	-	-	-	.112-40	.112-48	3-7.5	-
-	-	-	-	-	.138-32	.138-40	8-14	-
-	-	-	-	-	.164-32	.164-36	18-25	-
.250-20	.190-32	25-50	-	-	.190-24	.190-32	25-35	-
.3125-18	.250-28	50-110	-	50-165	.250-20	.250-28	50-95	50-105
.375-16	.3125-24	100-240	100-160*	100-350	.3125-18	.3125-24	100-225	100-250
.4375-14	.375-24	175-475	175-325*	175-600	.375-16	.375-24	175-375	175-400
.500-13	.4375-20	250-725	250-525	250-1000	.4375-14	.4375-20	250-650	250-700
.5625-12	.500-20	400-1150	400-850	400-1500	.500-13	.500-20	400-1000	400-1100
.625-11	.5625-18	600-1650	600-1150	600-2100	.5625-12	.5625-18	600-1450	600-1600
.6875-11	.625-18	900-2400	900-1700	900-3100	.625-11	.625-18	900-2000	900-2200
Machine Driven								
-	-	-	-	-	.112-40	.112-48	3-8	-
-	-	-	-	-	.138-32	.138-40	8-16	-
-	-	-	-	-	.164-32	.164-36	18-28	-
.250-20	.190-32	25-55	-	-	.190-24	.190-32	25-40	-
.3125.18	.250-28	50-125	-	50-165	.250-20	.250-28	50-105	50-105
.375-16	.3125-24	100-260	100-180*	100-350	.3125-18	.3125-24	100-250	100-250
.4375-14	.375-24	175-350	175-350	175-600	.375-16	.375-24	175-400	175-400
.500-13	.4375-20	250-800	250-575	250-1000	.4375-14	.4375-20	250-700	250-700
.5625-12	.500-20	400-1300	400-925	400-1500	.500-13	.500-20	400-1100	400-1100
.625-11	.5625-18	600-1850	600-1300	600-2100	.5625-12	.5625-18	600-1600	600-1600
.6875-11	.625-18	900-2700	900-1900	900-3100	.625-11	.625-18	900-2200	900-2200

* Values stated are for existing applications. This type and this size not used for new design.

TABLES OF TIGHTENING TORQUE VALUES (Cont)

TABLE 9-2 (Cont)

STUDS

Size of Stud End	Material	Spec. No. (AMS)	Brinell Hardness 1000 KG Load	Approximate PD of Tapped Hole	PD of Stud	Approximate Press Fit
3125-18 (Cont)	Forg. Alum.	4125, 4130	90-120	.2778 - .2788	.2810 - .2825	.0022 - .0047
	Forg. Alum.	4135	120-160	.2789 - .2799	.2810 - .2825	.0011 - .0036
	Cast Mag.	4424	60-95	.2778 - .2788	.2810 - .2825	.0022 - .0047
	Cast Mag.	4434, 4484	80-110	.2789 - .2799	.2810 - .2825	.0011 - .0036
	Cast Alum.	4210	50-80	.3344 - .3354	.3392 - .3407	.0038 - .0063
	Cast Alum.	4214, 4220, 4280	70-110	.3350 - .3360	.3392 - .3407	.0032 - .0057
	Forg. Alum.	4142	60-90	.3347 - .3357	.3392 - .3407	.0035 - .0060
3375-16	Forg. Alum.	4125, 4130	90-120	.3357 - .3367	.3392 - .3407	.0025 - .0050
	Forg. Alum.	4135	120-160	.3370 - .3380	.3392 - .3407	.0012 - .0037
	Cast Mag.	4424	60-95	.3360 - .3370	.3392 - .3407	.0022 - .0047
	Cast Mag.	4434, 4484	80-110	.3370 - .3380	.3392 - .3407	.0012 - .0037
	Cast Alum.	4210	50-80	.3911 - .3921	.3962 - .3977	.0041 - .0066
	Cast Alum.	4214, 4220, 4280	70-110	.3917 - .3927	.3962 - .3977	.0035 - .0060
	Forg. Alum.	4142	60-90	.3914 - .3924	.3962 - .3977	.0038 - .0063
3375 - 14	Forg. Alum.	4125, 4130	90-120	.3925 - .3935	.3962 - .3977	.0027 - .0052
	Forg. Alum.	4135	120-160	.3939 - .3949	.3962 - .3977	.0013 - .0038
	Cast Mag.	4424	60-95	.3929 - .3939	.3962 - .3977	.0023 - .0048
	Cast Mag.	4434, 4484	80-110	.3939 - .3949	.3962 - .3977	.0013 - .0038
	Cast Alum.	4210	50-80	.4500 - .4510	.4553 - .4568	.0043 - .0068
	Cast Alum.	4214, 4220, 4280	70-110	.4507 - .4517	.4553 - .4568	.0036 - .0061
	Forg. Alum.	4142	60-90	.4503 - .4513	.4553 - .4568	.0040 - .0065
3500-13	Forg. Alum.	4125, 4130	90-120	.4515 - .4525	.4553 - .4568	.0028 - .0053
	Forg. Alum.	4135	120-160	.4529 - .4539	.4553 - .4568	.0014 - .0039
	Cast Mag.	4424	60-95	.4519 - .4529	.4553 - .4568	.0024 - .0049
	Cast Mag.	4434, 4484	80-110	.4529 - .4568	.4553 - .4568	.0014 - .0039

TABLES OF TIGHTENING TORQUE VALUES (Cont)

TABLE 9-2 (Cont)

STUDS

Size of Stud End	Material	Spec. No. (AMS)	Brinell Hardness 1000 KG Load	Approximate PD of Tapped Hole	PD of Stud	Approximate Press Fit
.5625-12	Cast Alum.	4210	50-80	.5084 - .5094	.5139 - .5154	.0045 - .0070
	Cast Alum.	4214, 4220, 4280	70-110	.5094 - .5104	.5139 - .5154	.0035 - .0060
	Forg. Alum.	4142	60-90	.5089 - .5099	.5139 - .5154	.0040 - .0065
	Forg. Alum.	4125, 4130	90-120	.5099 - .5109	.5139 - .5154	.0030 - .0055
	Forg. Alum.	4135	120-160	.5114 - .5124	.5139 - .5154	.0015 - .0040
	Cast Mag.	4424	60-95	.5104 - .5114	.5139 - .5154	.0025 - .0050
	Cast Mag.	4434, 4484	80-110	.5114 - .5124	.5139 - .5154	.0015 - .0040
.625-11	Cast Alum.	4210	50-80	.5660 - .5670	.5717 - .5732	.0047 - .0072
	Cast Alum.	4214, 4220, 4280	70-110	.5670 - .5680	.5717 - .5732	.0037 - .0062
	Forg. Alum.	4142	60-90	.5665 - .5675	.5717 - .5732	.0042 - .0067
	Forg. Alum.	4125, 4130	90-120	.5675 - .5685	.5717 - .5732	.0032 - .0057
	Forg Alum.	4135	120-160	.5690 - .5700	.5717 - .5732	.0017 - .0042
	Cast Mag.	4424	60-95	.5680 - .5690	.5717 - .5732	.0027 - .0052
	Cast Mag.	4434, 4484	80-110	.5690 - .5700	.5717 - .5732	.0017 - .0042

TABLE 9-3

SCREW BUSHINGS

Screw Bushing Thread Size		Min Driving Torque Inch-Pounds
Inside Thread	Outside Thread	
No. 10(.190)-32	.3125-24	40
.250-28	.4375-20	50
.3125-24	.500-20	100
.375-24	.5625-18	150
.4375-20	.625-18	250
.500-20	.6875-16	350
.5625-18	.750-16	500
.625-18	.8125-16	650

TABLE 9-4

TAPER PIPE THREAD PLUGS

Nominal Size	Steel Plugs Slotted Head and/or Lockwired and all Non-Ferrous Plugs Torque Inch-Pounds
.0625-27	20-25
.125-27	35-50
.250-18	60-90
.375-18	100-140
.500-14	150-200
.750-14	200-250
1.000-11.5	250-300

TABLES OF TIGHTENING TORQUE VALUES (Cont)

TABLE 9-5

SLOTTED HEAD SCREWS

Thread Size	Min Rockwell Hardness Of Screw	Torque Applied At Slot Inch-Pounds
.086-56	B75	2-3
.099-48	B75	3-4
.112-40	B75	5-6
.125-40	B75	6-7
.138-32	B75	7-9
.164-32	B75	10-12
.190-32	B75	18-20
.216-24	B75	22-25
.250-28	C19	30-35
.3125-24	C19	40-45
.375-24	C19	55-60
.4375-20	C19	80-90
.500-20	C19	100-110

TABLE 9-6

HEXAGON HEAD SCREWS NUTS (PLAIN, SLOTTED, SELF LOCKING)

Thread Size	Rockwell Hardness Of Screw	Torque Plain, Self-Locking Nut and Screw Inch-Pounds	Torque Slotted Nut Inch-Pounds
.138-40	C26-32	14-15	-
.164-36	C26-32	23-25	-
.190-32	C26-32	45-50	-
.216-24	C26-32	60-65	
.250-28	C26-32	80-85	70-95
.3125-24	C26-32	125-140	120-165
.375-24	C26-32	275-300	250-325
.4375-20	C26-32	425-450	400-475
.500-20	C26-32	500-600	500-700
.5625-18	C26-32	825-875	750-1000
.625-18	C26-32	1125-1200	1000-1400
.750-16	C26-32	1900-2050	-

TABLE 9-7

STRAIGHT THREAD PLUGS (SOLID METAL GASKET)

Thread Size	Torque Slotted Head Inch-Pounds	Torque Hex Head Inch-Pounds	Thread Size	Torque Hex Head* Inch-Pounds
.250-28	75-80	75-80	1.000-14	300-325
.3125-24	90-100	90-100	1.000-18	300-325
.375-24	110-125	110-125	1.125-12	325-350
.4375-20	125-140	125-140	1.250-12	350-400
.500-20	145-160	145-160	1.375-12	400-450
.5625-18	160-175	160-175	1.500-12	425-475
.625-18	-	175-200	1.625-12	475-525
.750-16	-	215-240	1.750-12	500-550
.875-14	-	250-275	1.875-12	550-600
			2.000-12	600-650

TABLE 9-8

FLUID FITTINGS, JAM NUTS AND BOLTS USED WITH GASKETS IN BOSS TYPE APPLICATIONS

Tube Size	Nut Size	Torque Inch-Pounds Min	Max
.125	.3125-32	40	45
.250	.4375-20	80	85
.375	.625-18	150	175
.500	.750-16	275	300
.625	.875-14	375	400
.750	1.0625-12	550	600
1.000	1.3125-12	800	900
1.250	1.625-12	900	1000
1.500	1.875-12	900	1000

TABLES OF TIGHTENING TORQUE VALUES (Cont)

TABLE 9-9

RETAINING NUTS		
	Torque Inch-Pounds	
Size	Min	Max
.250 to .500 Excl.	15	*
.500 to 1.000 Excl.	25	*
1.000 to 2.000 Excl.	35	*
2.000 and up	50	*

*To first pinhole.
This is a group of nuts that are assembled against the shoulder of a shaft and primarily act as retainers with lightly loaded thrust faces.

TABLE 9-10

COUPLING NUTS					
	FLARED TUBE STRAIGHT THREAD COUPLING			HOSE AND FITTING ASSEMBLIES	
		Torque Value, Inch-Pounds		Torque Value, Inch-Pounds	
Nut Size	Tubing OD Inches	Al Alloy Tubing	Steel Tubing	Al Nut With Al Fitting Steel Nut with Al Fitting or Al Nut with Steel Fitting	Steel Nut With Steel Fitting
.375-24	.188	30-50	90-100	30-50	90-100
.4375-20	.250	40-65	135-150	40-65	135-150
.500-20	.313	60-80	180-200	60-80	180-200
.5625-18	.375	75-125	270-300	75-125	270-300
.750-16	.500	150-250	450-500	150-250	450-500
.875-14	.625	200-350	650-700	200-350	650-700
1.0625-12	.750	300-500	900-1000	300-500	900-1000
1.3125-12	1.000	500-700	1200-1400	500-700	1200-1400
1.625-12	1.250	600-900	-	-	-
1.875-12	1.500	600-900	-	-	-

See AND10064 for installation of fittings.

TABLES OF TIGHTENING TORQUE VALUES (Cont)

TABLE 9-11

STANDARD PRACTICES FOR SPECIAL APPLICATIONS

Name	Thread Size	Min Dia of Thd Root or Neck	Minimum Rockwell Hardness	Torque In.-lb. Tightening Nut, etc. Min.	Max
Spark Plug	18mm - 1.5mm	-	-	420	480
Spark Plug Insert	1.000 - 14	-	-	1400	2500 *
Rocker Hub Bolt	.5625 - 18	.488	C26	300	375
Magnetic Drain Plug (O-Ring)	1.000 - 18			125	150
Sump Plug (O-Ring)	1.625 - 12			175	200
Exhaust Pipe Connector to Cylinder Head	.3125 - 18			110	140
Strainer Plug (O-Ring)	1.375 - 12			150	175
Exhaust Flange Locknut	.3125 - 24			90	100

* Select inserts to obtain a minimum driving torque of 100 inch-pounds at the fourth thread. Drive inserts at room temperature. Apply "No-Lock," (Goger Inc., 144 Cuyahoga St., P.O. Box 991, Akron, Ohio 44309) or "Sauereisen 66," (Sauereisen Cement Co., 3389 Sharpsburg Station, Pittsburgh, Pennsylvania) or equivalent, to the entire seating surface of the insert. Apply anti-seize compound composed of 75 percent petrolatum and 25 percent graphite to the threads in the cylinder head. Seat by applying a minimum of 1400 inch-pounds plus actual maximum driving torque, but not greater than 2500 inch-pounds maximum total torque.

TABLE 9-12

STRAIGHT THREAD PLUGS (METAL-FIBRE GASKET)

Thread Size	Torque Inch-Pounds
1.000-14	125-150
1.000-18	150-175
1.375-12	175-200
1.625-12	200-225
2.000-12	250-275

TABLES OF TIGHTENING TORQUE VALUES (Cont)

TABLE 9-13

IGNITION CONNECTIONS NUTS		
Name	Torque In-lb. Min	Max
High Tension Spark Plug Lead	165	175

TABLE 9-14

CYLINDER HOLD-DOWN SCREWS				
Thread Size	Minimum Dia of Neck	Minimum Rockwell Hardness	Torque In.-lb. Min	Max
0.4375-20	0.338	C26	500	525
0.4375-20*	0.338	C32	575	600

The heads of cylinder hold-down capscrews and the spherical washers shall be free from oil or other lubricants. Apply Permatex No. 3 sealant (Permatex Co., Brooklyn 35, N. Y. and Kansas City 15, Kansas) to the capscrew threads.

***These capscrews are identified by two shallow slots at right angles to each other across the top of the hexagon head.**

TABLE 9-15 - TABLES OF LIMITS

The limits listed in the following table are identified by reference numbers which appear on the accompanying limit charts and indicate the particular location where the fit applies. Fits are given in inches unless otherwise specified.

Ref. No.	Sheet No. Models 76/86	80	Description		Blueprint Minimum	Blueprint Maximum	Service Limit
1	1	3	Propeller Shaft Measured from thrust nut to center of hole.	Length	8.5680	8.5950	8.5950
1	1	3	Propeller Shaft Measured from thrust nut to center of hole.	Length	8.5470	8.5770	8.5770
2	1	3	Propeller Shaft This fit is to be measured with the thrust bearing outer race restrained from axial movement in the crankcase front section.	End Play SKF MRC	 0.0030 0.0030	 0.0101 0.0149	 0.0200 0.0240
3	1	3	Propeller Shaft Sleeve and Propeller Shaft	Dia	0.0015T	0.0045T	0.0015T
4	1	3	Spline Side Clearance Movement of Propeller Hub On propeller shaft measured at 15 inch radius from center of the propeller shaft.		------	------	0.0400
5	1	3	Propeller Shaft To be measured one inch from thrust bearing nut with engine hot to secure accurate measurement. An indicator must be used.	Total Radial Looseness	------	0.0100	0.0150
6	1	3	Propeller Shaft and Sleeve	Dia	0.0015T	0.0045T	0.0015T
7	1	3	Propeller Shaft and Thrust Bearing	Dia	0.0002T	0.0016T	0.0002T
8	1	3	Propeller Shaft Thrust Bearing Total End Movement	SKF MRC	0.0050 0.0090	0.0120 0.0140	0.0180 0.0180
9	1	3	Propeller Shaft Thrust Bearing Retainer and Crankcase Front Section	Dia	0.0060T	0.0100T	0.0060T
10	1	3	Propeller Shaft Thrust Bearing Retainer and Bearing (close Clearance bearing) Select to obtain	Dia	0.0006T	0.0004L	0.0010L
11	1	3	Propeller Shaft Thrust Bearing and Retainer	Side	0.0001T	0.0059L	0.0059L

TABLE 9-15 - Continued

Ref. No.	Sheet No. Models 76/86	80	Description		Blueprint Minimum	Blueprint Maximum	Service Limit
12		3	Stationary Reduction Gear Support and Propeller Shaft Thrust Bearing	Dia	0.0006T	0.0014L	0.0020L
13	1	3	Crankcase Front Section Flange and Crankcase Front Section	Dia	0.0000	0.0040L	0.0040L
14		3	Propeller Shaft Thrust Bearing Spacer and Propeller Shaft	Dia	0.0010T	0.0005L	0.0005L
15	1	3	Propeller Shaft Sleeve and Bushing	Dia	0.0015T	0.0035T	0.0015T
16	1	3	Crankshaft Front End and Propeller Shaft Front Bushing	Dia	0.0025L	0.0045L	0.0060L
17	1	3	Allowable Runout of Crankshaft at Front and Rear Propeller Shaft Bushing Locations When supported at main front and rear bearings.	Full Indicator Reading	-----	-----	0.0060
18	1	3	Allowable Runout of Propeller Shaft Between Threads and Splines of Forward End When in position in engine.	Full Indicator Reading	-----	-----	0.0120
19	1	3	Propeller Shaft Thrust Bearing Nut Oil Seal Ring Gaps to be set 180 degrees apart.	Gap	0.0030	0.0050	0.0050
20	1	3	Propeller Shaft Thrust Bearing Nut Oil Seal Ring	Side	0.0030L	0.0075L	0.0150L
21	1	3	Propeller Shaft and Rear Bushing	Dia	0.0025T	0.0045T	0.0025T
22	1	3	Crankshaft Front End and Propeller Shaft Rear Bushing	Dia	0.0030L	0.0050L	0.0070L
23	1	3	Propeller Shaft Thrust Bearing Spacer Oil Sear Ring Hand fit. Gaps to be set 180° apart.	Gap	0.0120	0.0130	0.0130
24	1	3	Propeller Shaft Thrust Bearing Spacer and Ring	Side	0.0010L	0.0060L	0.0100L
25	1		Propeller Shaft and Thrust Bearing Spacer Select to obtain.	Dia	0.0010T	0.0010L	0.0010L

TABLE 9-15 - Continued

Ref. No.	Sheet No. Models 76/86	80	Description		Blueprint Minimum	Blueprint Maximum	Service Limit
26	1		Stationary Reduction Gear and Bearing	Dia	0.0004L	0.0034L	0.0040L
27	1		Reduction Gear Pinion Bushing and Propeller Shaft Arm (shrink fit)	Dia	0.0020T	0.0040T	0.0020T
28	1		Reduction Gear Pinion and Bushing	Dia	0.0020L	0.0040L	0.0060L
29	1		Reduction Driving Gear and Pinion	Backlash	0.0080	------	------
30	1		Reduction Gear Pinion and Stationary Reduction Gear	Backlash	0.0060	------	------
31	1		Reduction Gear Pinion and Propeller Shaft Arm	Side	0.0060L	0.0140L	0.0250L
32		3	Stationary Reduction Gear and Support	Dia	0.0010L	0.0030L	0.0080L
33		3	Reduction Gear Pinion Carrier and Propeller Shaft	Dia	0.0015T	0.0010L	0.0010L
34		3	Reduction Gear Pinion	Side	0.0020L	0.0070L	0.0100L
35		3	Reduction Gear Pinion Carrier and Bushing Propeller End	Dia	0.0005L	0.0021L	0.0060L
			Anti-Propeller End	Dia	0.0015L	0.0031L	0.0060L
36		3	Reduction Gear Pinion and Bushing	Dia	0.0013L	0.0025L	0.0035L
37		3	Reduction Driving Gear and Pinion	Backlash	0.0110	------	------
38		2	Stationary Reduction Gear and Pinion	Backlash	0.0110	------	------
39		3	Stationary Reduction Gear Support and Sleeve	Dia	0.0050T	0.0070T	0.0050T
40		3	Reduction Driving Gear and Cam Drive Intermediate Gear	Backlash	0.0160	------	------
41	1	3	Governor Drive Gear Shaft and Plug	Dia	0.0020T	0.0100T	0.0020T
42	1	3	Governor Drive Shaft Bushing and Crankcase	Dia	0.0010T	0.0030T	0.0010T
43	1	3	Governor Drive Gear Shaft and Bushing	Dia	0.0020L	0.0035L	0.0060L
44	1	3	Governor Drive Gear and Intermediate Drive Gear	Backlash	0.0020	------	------

TABLE 9-15 - Continued

Ref. No.	Sheet No. Models 76/86	80	Description		Blueprint Minimum	Blueprint Maximum	Service Limit
45	1	3	Valve Tappet and Ball Socket	Dia	0.00120L	0.00245L	0.0030L
46	1	3	Valve Tappet and Guide	Dia	0.00175L	0.00350L	0.00425L
47	1	3	Valve Tappet Guide and Crankcase Front Section	Dia	0.0000	0.0015L	0.0020L
48	1	3	Valve Tappet Spring Wire Dia. 0.063	Load at 2.14 Height	10 lb	12 lb	9.5 lb
49	1	3	Valve Tappet and Valve Tappet Roller	Side	0.0075L	0.0125L	0.0150L
50	1	3	Valve Tappet Roller and Bushing	Dia	0.0010L	0.0020L	0.0050L
51	1	3	Valve Tappet and Bushing	Side	0.0070L	0.0120L	0.0150L
52	1	3	Valve Tappet Roller Pin and Guide	Side	0.0050L	0.0110L	0.0160L
53	1	3	Valve Tappet Roller Pin and Bushing	Dia	0.0020L	0.0030L	0.0060L
54	1	3	Valve Tappet Roller Pin and Valve Tappet	Dia	0.0025L	0.0040L	0.0060L
55	1		Cam and Cam Guide	Side	0.0080L	0.0120L	0.0140L
56	1		Reduction Driving Gear and Cam Drive Intermediate Gear	Backlash	0.0160	------	------
57	1		Cam Drive Intermediate Gear and Bushing and Cam Drive Pinion	End	0.0060L	0.0160L	0.0210L
57A	1		Intermediate Cam Drive Gear Bushing, and Cam, and Oil Sump Scavenge Pump Drive Support				1.903*
58	1	3	Cam, Balanceweights and Oil Sump Pump Drive Support and Bushing	Dia	0.0020T	0.0040T	0.0020T
59	1	3	Cam Drive Intermediate Gear and Bushing	Dia	0.0020L	0.0040L	0.0060L
60	1	3	Cam Drive Intermediate Gear and Pinion	Spline Fit	0.0010T	0.0030L	0.0100L
61	1	3	Cam and Cam Drive Pinion	Backlash	0.0080	------	------
62	1	3	Crankcase main Section and Cam Support	Dia	0.0015T	0.0005L	0.0010L

*Minimum Bushing End-to-End Axial Dimension

TABLE 9-15 - Continued

Ref. No.	Sheet No. Models 76/86	80	Description		Blueprint Minimum	Blueprint Maximum	Service Limit
63	1	3	Oil Sump Scavenge Pump Driven Coupling Gear and Drive Shaft Gear-Bend both legs of cotterpin around OD of nut-oil sump scavenge	Backlash	0.0020	------	------
64	1	3	Oil Sump Scavenge Pump Driven Coupling Gear and Bushing	End	0.0020L	0.0080L	0.0100L
65	1	3	Oil Sump Scavenge Pump Driven Coupling Gear and Bushing	Dia	0.0010L	0.0030L	0.0050L
66	1		Cam and Oil Sump Pump Drive Support and Bushing	Dia	0.0015T	0.0035T	0.0015T
67	1		Cam and Oil Sump Pump Drive Support and Cam Bearing	Dia	0.0010T	0.0040T	0.0010T
68	1	3	Cam and Cam Bearing	Dia	0.0060L	0.0140L	0.0180L
69	1		Cam and Cam Bearing	Side	0.0080L	0.0140L	0.0160L
70		3	Cam and Cam Retainer	Side	0.0080L	0.0140L	0.0160L
71		3	Cam Drive Intermediate Gear and Bushing	End	0.0060L	0.0160L	0.0210L
72		3	Cam and Balanceweights and Oil Sump Pump Drive Support and Cam Drive Intermediate Gear Bushing	Dia	0.0020T	0.0040T	0.0020T
73	1	3	Oil Sump Scavenge Pump Drive Shaft Gear Pinion and Cam	Backlash	0.0080	------	------
74	1	3	Oil Sump Scavenge Pump Driven Coupling Gear Support and Bushing	Dia	0.0015T	0.0035T	0.0015T
75	1	3	Oil Sump Scavenge Pump Drive Shaft Gear and Support Bushing	Dia	0.0010L	0.0030L	0.0050L
76	1	3	Oil Pump Body and Oil Sump Scavenge Pump Drive Shaft Gear Bushing	Dia	0.0005T	0.0025T	0.0005T
77	1	3	Oil Sump Scavenge Pump Drive Shaft Gear and Bushing	Dia	0.0020L	0.0035L	0.0050L
78		3	Cam and Balanceweights and Oil Sump Pump Drive Support and Bushing	Dia	0.0015T	0.0035T	0.0015T

TABLE 9-15 · Continued

Ref. No.	Sheet No. Models 76/86	80	Description		Blueprint Minimum	Blueprint Maximum	Service Limit
79		3	Cam and Balanceweights and Oil Sump Drive Support and Cam Bearing	Dia	0.0010T	0.0040T	0.0010T
80	1	3	Oil Sump Scavenge Pump Drive Shaft Gear and Oil Pump Body Cover	Dia	0.0020L	0.0035L	0.0050L
81	1	3	Oil Sump Scavenge Pump Gears	End	0.0040L	0.0100L	0.0120L
82	1	3	Oil Sump Scavenge Pump Driven Gear and Drive Shaft Gear	Backlash	0.0020	------	------
83	1	3	Oil Sump Scavenge Pump Driven Gear and Oil Pump Body Cover	Dia	0.0020L	0.0035L	0.0050L
84	1	3	Oil Pump Body and Oil Sump Scavenge Pump Gears	Dia	0.0040L	0.0100L	0.0100L
85	1	3	Oil Pump Body and Oil Sump Scavenge Pump Driven Gear	Dia	0.0020L	0.0035L	0.0050L
86	1	3	Oil Sump Pump Body and Oil Pump Body Cover	Dia	0.0000	0.0020L	0.0030L
87	1		Oil Sump Pump Body and Oil Sump	Dia	0.0010L	0.0030L	0.0050L
88	7	7	Balanceweight Support and Balanceweight Bushing and Balanceweight Drive Gear Bushing	Dia	0.0020L	0.0040L	0.0060L
89	7	7	Balanceweight Drive Gear and Bushing	Dia	0.0005L	0.0025L	0.0050L
90	7	7	Balanceweight Drive Gear	End Play	0.0030	0.0090	0.0150
91	7	7	Balanceweight Drive Gear and Balanceweight	Backlash	0.0100	------	------
92	7	7	Balanceweight and Bushing	Dia	0.0005L	0.0025L	0.0050L
93	7	7	Balanceweight	End Play	0.0030	0.0090	0.0150
94	7	7	Balanceweight Drive Gear and Reduction Driving Gear	Backlash	0.0160	------	------
200	2	3	Crankshaft Oil Seal Ring (Hand Fit)	Gap	0.0180	0.0200	0.0200
201	1	3	Crankshaft Oil Seal Ring and Spacer	Side	0.0010L	0.0080L	0.0120L
202	1	3	Crankshaft Front End and Oil Seal Ring Spacer	Dia	0.0005L	0.0025L	0.0050L

TABLE 9-15 · Continued

Ref No.	Sheet No. Models 76/86	80	Description		Blueprint Minimum	Blueprint Maximum	Service Limit
203	1	3	Front Main Bearing and Crankshaft Front End	Dia	0.0010T	0.0024T	0.0010T
204	1	3	Crankcase Front Main Bearing Ring and Bearing	Dia	0.0020L	0.0042L	0.0060L
205	1	3	Crankcase Front Main Bearing Ring and Crankcase	Dia	0.0010T	0.0010L	0.0010L
206	2	4	Crankcase Main Rear Bearing Ring and Crankcase	Dia	0.0100T	0.0120T	0.0100T
207	2	4	Crankcase Rear Main Bearing Ring and Bearing	Dia	0.0040L	0.0060L	0.0080L
208	2	4	Crankshaft Rear Bearing and Crankshaft Check to ensure that flange face of crankshaft rear main bearing inner race is seated on the crankshaft rear hub collar face. Torque retaining nut to an initial torque value of 4000-7000 inch-pounds. If the locking screw lines up with the locking hole in the crankshaft rear end after the initial torque, assemble lockwasher and locking screw until one flat of screw hex head is approximately parallel to crankshaft rear end face. Maintain 45-55 inch-pounds torque. If flat cannot be assembled parallel, remove screw and select another. In the event locking screw does not freely line up and assemble into holes of crankshaft rear end OD after torquing to 4000-7000 inch-pounds, loosen and retorque with 4000-7000 inch-pounds to obtain proper alignment. If alignment of lockscrew holes cannot be obtained within the 4000-7000 inch-pounds range, select another nut.	Dia	0.0010T	0.0024T	0.0010T
209	2	3	Crankshaft	End Play	0.0130L	0.0450L	0.0510L
210	1	3	Crankshaft Plug and Crankshaft	Dia	0.0010T	0.0010L	0.0010L
211	1	3	Crankpin Plug and Crankpin	Dia	0.0005L	0.0020L	0.0020L

TABLE 9-15 - Continued

Ref. No.	Sheet No. Models 76/86	80	Description		Blueprint Minimum	Blueprint Maximum	Service Limit
212	2	4	Master Rod and Bearing	Dia	0.0010L	0.0025L	0.0035L
213	2	4	Crankpin Bearing and Crankpin	Dia	0.0040L	0.0055L	0.0075L
214	2	4	Master Rod and Master Rod Spacer	Dia	0.0030L	0.0060L	0.0080L
215	2	4	Master Rod and Crankpin Clearance to be measured with master rod in extreme forward position	End	0.0120L	0.0340L	0.0340L
216	2	4	Master Rod Oil Seal Disc Lugs and Knuckle Pin Locking Plate Lugs *Allowable gap when one side of disc slot is tight against side of prong on knuckle pin lock plate.	Side	0.0030L	0.0130L*	0.0030L*
217	2	4	Knuckle Pin Locking Plate and Master Rod Oil Seal Disc	Dia	0.0010L	0.0045L	0.0060L
218	2	4	Master Rod and Knuckle Pin Locking Plate	Dia	0.0000	0.0020L	0.0030L
219	2	4	Master Rod and Knuckle Pin Bushing	Side	0.0070L	0.0210L	0.0230L
220	2	4	Master Rod and Knuckle Pin	Dia	0.0000	0.0011L	0.0015L
221	2	4	Articulated Rod and Knuckle Pin Bushing	Dia	0.0045T	0.0065T	0.0045T
222	2	4	Knuckle Pin and Bushing	Dia	0.0027L	0.0041L	0.0060L
223	1	3	Front Counterweight Crankshaft Bushing and Crankshaft	Dia	0.0010T	0.0025T	0.0010T
224	1	3	Front Counterweight and Bushing	Dia	0.0015T	0.0030T	0.0015T
225	1	3	Front Counterweight and Crankcheek	Side	0.0320L	0.0430L	0.0470L
226	2	4	Crankshaft Rear End and Counterweight Bearing	Dia	0.0010T	0.0025T	0.0010T
227	2	4	Counterweight Rear Crankshaft Bearing and Bushing	Dia	0.0017L	0.0035L	0.0035L
228	2	4	Rear Counterweight and Crankcheek	Side	0.0235L	0.0330L	0.0400L
229	2	4	Rear Counterweight and Bushing	Dia	0.0015T	0.0030T	0.0015T

TABLE 9-15 · Continued

Ref. No.	Sheet No. Models 76/86	80	Description		Blueprint Minimum	Blueprint Maximum	Service Limit
230	2	4	Crankcheek Cap Screw	Stretch	0.0080	0.0100	0.0100
231	2	4	Accessory Drive and Starter Shaft and Oil Seal Ring	Side	0.0020L	0.0060L	0.0080L
232	2	4	Starter Shaft and Coupling Ring	Gap	0.0006	0.0037	0.0040
233	2	4	Accessory Drive and Starter Shaft Coupling and Crankshaft Select to obtain.	Dia	0.0010T	0.0020T	0.0010T
234	1	3	Crankcase Main Section and Crankcase Front Section	Dia	0.0020T	0.0040L	0.0060L
235	5	5	Cylinder Barrel Bore	Wear Out of Round	------ ------	------ ------	0.0100 0.0050
236	5	5	Piston Pin Plug and Cylinder Wall	End	0.0400L	0.0640L	0.0850L
237	5	5	Piston Pin Plug and Piston Pin	Dia	0.0010T	0.0030T	0.0010T
238	5	5	Piston Pin Bushing and Piston Pin	Dia	0.0020L	0.0035L	0.008L
239	5	5	Piston Pin Bushing and Connecting Rod	Dia	0.0045T	0.0065T	0.0045T
240	5	5	Piston Pin and Piston (at ends of pins)	Dia	0.0002L	0.0015L	0.0040L
241	5	5	Piston and Cylinder Barrel (Center of Skirt) Piston Wear (Center of Skirt)	Dia Dia	0.02300L ------	0.0270L ------	0.0410L 0.0040
242	5	5	Piston and No. 1 (top) Piston Ring (Wedge)	Side	0.000*	0.0070*	=
243	5	5	Piston and No. 2 Piston Ring (Wedge)	Side	0.0020*	0.0120*	=
244	5	5	Piston and No. 3 Piston Ring	Side	0.0110L	0.0130L	=
245	5	5	Piston and No. 4 Piston Ring	Side	0.0110L	0.0130L	=
246	5	5	Piston and No. 5 Piston Ring	Side	0.0000L	0.0080L	=

*This dimension is measured radially inward from the second and third ring lands to the ring face with the ring bottomed in the groove. Check in line with valve

TABLE 9-15 - Continued

Ref. No.	Sheet No. Models 76/86	80	Description		Blueprint Minimum	Blueprint Maximum	Service Limit
246 (Cont)			recesses. (Select to obtain) # Replace rings at each overhaul using minimum and maximum fits specified				
247	5	5	Exhaust Port Sleeve and Cylinder Head	Dia			
				4 Bolt Flange	0.0062T	0.0092T	0.0062T
				3 Bolt Flange	0.0072T	0.0102T	0.0072T
248	5	5	Exhaust Valve Seat and Cylinder Head	Dia	0.0090T	0.0130T	0.0090T
249	5	5	Exhaust Valve and Valve Guide	Dia	0.0045L	0.0060L	------
				Center Dia	------	------	0.0080L
				End Dia	------	------	0.0100L
250	5	5	Exhaust Valve Guide and Cylinder Head	Dia	0.0040T	0.0055T	0.0040T
251	5	5	Exhaust Valve Guide Retainer Sleeve and Guide		0.0010T	0.0025T	0.0010T
252	5	5	Valve Spring - Inner	Wire Dia 0.188 Load @ 1.561 Height	117.80 lb	130.20 lb	100 lb
			Valve Spring - Outer	Wire Dia 0.244 Load @ 1.406 Height	203.30 lb	224.70 lb	198 lb
253	5	5	Valve Spring - Inner	Wire Dia 0.188 Load @ 1.475 Height	146 lb	162 lb	131 lb
			Valve Spring - Outer	Wire Dia 0.273 Load @ 1.410 Height	280 lb	320 lb	252 lb
254	5	5	Valve Clearance Set valve clearance at 0.003 inch. Service limit to be 0.003 - 0.020 inch.				
255	5	5	Rocker Roller Hub and Rocker Arm Select at assembly	Side	0.0000	0.0010T	Rivet Tight
256	5	5	Rocker Roller and Rocker Arm	Side	0.0095L	0.0155L	0.0500L
257	5	5	Rocker Hub and Roller	Dia	0.0015L	0.0035L	0.0060L
258	5	5	Rocker Roller Hub and Pin (Select at Assembly; Peen Pin Tight)	Dia	0.0010T	0.0020L	Rivet Tight

TABLE 9-15 - Continued

Ref. No.	Sheet No. Models 76/86	80	Description		Blueprint Minimum	Blueprint Maximum	Service Limit
259	5	5	Rocker Hub Bolt Bushing and Bearings (Anti-Friction Brg.) Side clearance prior to torquing rocker arm bolt nut.	Side	0.0000	0.0060L	0.0100L
260	5	5	Rocker Hub Bolt Bushing and Rocker Bolt	Dia	0.0007L	0.0032L	0.0050L
261	5	5	Rocker Hub Bolt Bushing and Cylinder Head	Dia	0.0020T	0.0035T	0.0020T
262	5	5	Rocker Arm Bearing and Rocker Arm	Dia	0.0008T	0.0018T	0.0008T
263	5	5	Rocker Arm Bearing and Rocker Bolt	Dia	0.0002L	0.0012L	0.0050L
264	5	5	Intake Valve Seat and Cylinder Head	Dia	0.0065T	0.0105T	0.0065T
265	5	5	Intake Valve and Valve Guide	Dia	0.0020L	0.0035L	------
				Center Dia	------	------	0.0080L
				End Dia	------	------	0.0100L
266	5	5	Intake Valve Guide and Cylinder Head	Dia	0.0010T	0.0030T	0.0010T
267	5	5	Rocker Arm and Upper Valve Spring Washer	Clearance	0.0100	------	------
268	5	5	Intake Valve Guide and Valve Spring Washer Select if necessary to obtain this fit.	Dia	0.0020T	0.0120T	0.0020T
269	5	5	Valve Face Angle 37° 00′ - 37° 15′ Valve Seat Face Angle 37° 45′ - 38° 00′				
270	5	5	Valve Spring Outer Lower Washer and Cylinder Head	Dia	0.0070T	0.0150T	0.0070T
271	2		Accessory Drive and Starter Shaft Coupling and Crankshaft (Pinned Coupling)	Dia	0.0010T	0.0025T	0.0010T
272	5	5	Rocker Hub Bolt Bushing and Bearing (Plain Bearing) Side clearance prior to torquing rocker arm bolt nut.	Side	0.0005L	0.0075L	0.0100L
273	5	5	Rocker Arm Bushing and Rocker Arm	Dia	0.004T	0.006T	0.004T
274	5	5	Rocker Arm Bearing and Bushing	Dia	0.0020L	0.0035L	0.0050L

TABLE 9-15 - Continued

Ref. No.	Sheet No. Models 76/86	80	Description		Blueprint Minimum	Blueprint Maximum	Service Limit
274A	5	5	Rocker Arm Bushing and Bearing (Plain Bearing)	Side Clearance	0.0040L	0.0160L	0.0250L
275	1	3	Piston Oil Check Valve Valve must open and close at an oil supply pressure of 10 to 20 psi using WAD No. 115 oil 90° F ± 5° F.				
400	2	4	Impeller Shaft Oil Seal Sleeve and Ring (Front)	Side	0.0050L	0.0090L	0.0090L
401	2	4	Impeller Shaft Oil Seal Front Sleeve Ring Hand Fit (Total of 3 gaps)	Gap	0.0060	0.0120	0.0120
402	2	4	Impeller Shaft and Oil Seal Front Sleeve	Dia	0.0000	0.0025L	0.0040L
403	2	4	Impeller Shaft and Front Bushing	Dia	0.0020T	0.0040T	0.0020T
404	2	4	Impeller Shaft Front Bushing and Accessory Drive and Starter Shaft	Dia	0.0025L	0.0040L	0.0060L
405	2	4	Impeller and Shaft Impeller must be a tight fit on splines. Note: Assemble Impeller, two spacers and Impeller shaft with engine oil. Make certain all omitted splines are in alignment.		------	------	------
406	2	4	Impeller Shaft and Rear Oil Seal Sleeve	Dia	0.0000	0.0030L	0.0040L
407	2	4	Impeller Shaft Oil Seal Ring (Rear) Hand fit. (Total of 3 gaps)	Gap	0.0060	0.0120	0.0120
408	2	4	Impeller Shaft Oil Seal Sleeve and Ring (Rear)	Side	0.0050L	0.0090L	0.0090L
409	2	4	Impeller and Supercharger Front Housing	Side	0.0300L	------	------
410	2	4	Impeller and Diffuser Plate *This clearance to be measured at a point 30° counterclockwise from top of diffuser plate (viewed from propeller end) with impeller in maximum rearward position.	*Side	0.0350L	0.0450L	0.0450L

TABLE 9-15 · Continued

Ref. No.	Sheet No. Models 76/86	80	Description		Blueprint Minimum	Blueprint Maximum	Service Limit
411	2	4	Impeller Shaft and Rear Bushing	Dia	0.0020T	0.0040T	0.0020T
412	2	4	Impeller Shaft Rear Bushing and Accessory Drive and Starter Shaft	Dia	0.0020L	0.0040L	0.0060L
413	2		Impeller Drive Multi-Plate Clutch Sleeve and Housing	Dia	0.0030L	0.0080L	0.0100L
414	2		Impeller Drive Multi-Plate Clutch Sleeve and Supercharger Rear Cover	Dia	0.0000	0.0030T	0.0000
415	2		Impeller Drive Multi-Plate Clutch Piston and Ring	Side	0.0065L	0.0110L	0.0140L
416	2		Impeller Drive Multi-Plate Clutch Piston Oil Seal Ring Hand Fit.	Gap	0.0015	0.0035	0.0035
417	2		Impeller Clutch Release Spring Wire Dia. 0.095 in. Load @ 0.62 Height		16.2 lb	19.8 lb	15 lb
418	2		Impeller Drive Multi-Plate Clutch Piston and Two-Speed Clutch Thrust Washer Lock	Dia	0.0020T	0.0045T	0.0020T
419	2		Impeller Drive Multi-Plate Clutch Piston and Intermediate Impeller Drive Shaft Bushing	Dia	0.0020L	0.0030L	0.0030L
420	2		Impeller Shaft Retainer Oil Seal Ring Hand Fit.	Gap	0.0060	0.0080	0.0080
421	2	4	Impeller Shaft Retainer and Oil Seal Ring	Side	0.0020L	0.0070L	0.0110L
422	2	4	Impeller Shaft Adjust at Assembly	End	0.0120L	0.0170L	0.0170L
423	2		Impeller Low Speed Drive Cam and Clutch Cam Bushing	Dia	0.0015T	0.0035T	0.0015T
424	2		Impeller Drive Multi-Plate Clutch Housing and Clutch Roller Cage Adjust Intermediate Impeller drive shaft end play item No. 434 to obtain this clearance.	End	0.0300L	------	------

TABLE 9-15 - Continued

Ref. No.	Sheet No. Models 76/86 80	Description		Blueprint Minimum	Blueprint Maximum	Service Limit
425	2	Intermediate Impeller Roller Clutch Drive Gear and Accessory Drive Gear	Backlash	0.0040	------	------
426	2	Intermediate Impeller Roller Clutch Drive Gear and Bushing	Dia	0.0025T	0.0040T	0.0025T
427	2	Intermediate Impeller Drive Shaft and Drive Gear Bushing	Dia	0.0015L	0.0035L	0.0080L
428	2	Intermediate Impeller Drive Shaft and Rear Bushing	Dia	0.0015L	0.0035L	0.0070L
429	2	Intermediate Impeller Drive Shaft Gear and Bushing	Dia	0.0020L	0.0040L	0.0060L
430	2	Intermediate Impeller Shaft Drive Gear and Front Bushing	Dia	0.0010T	0.0025T	0.0010T
431	2	Intermediate Impeller Drive Shaft and Bushing	Dia	0.0015L	0.0035L	0.0060L
432	2	Intermediate Impeller Shaft Drive Gear and Pinion Cage Bushing	Dia	0.0005L	0.0025L	0.0060L
433	2	Intermediate Impeller Drive Shaft Pinion Cage and Bushing	Dia	0.0005L	0.0025L	0.0060L
434	2	Intermediate Impeller Drive Shaft (Machine at assembly.) Item No. 424 impeller drive multi-plate clutch housing and clutch roller cage clearance is affected by this adjustment.	End Play	0.0200L	------	------
435	2	Intermediate Impeller Drive Shaft and Pinion	Backlash	0.0060	------	------
436	2	Intermediate Impeller Drive Shaft Pinion Rear Cage and Pinion Bushing	Dia	0.0005L	0.0025L	0.0060L
437	2	Intermediate Impeller Drive Pinion and Bushing	Dia	0.0005L	0.0025L	0.0040L
438	2	Intermediate Impeller Drive Pinion and Bushing	Side	0.0040L	0.0140L	0.0200L

TABLE 9-15 - Continued

Ref No.	Sheet No. Models 76/86	80	Description		Blueprint Minimum	Blueprint Maximum	Service Limit
439	2		Intermediate Impeller Shaft Drive Gear and Pinion	Backlash	0.0060	------	------
440	2		Intermediate Impeller Shaft Drive Gear and Impeller Drive Shaft Gear	Backlash	0.0030	------	------
441	2		Intermediate Impeller Drive Shaft Rear Bushing and Supercharger Rear Cover	Dia	0.0010T	0.0030T	0.001T
442	2	4	Accessory Drive and Starter Shaft Machine at assembly.	End	0.0150L	0.0250L	0.0250L
443	2	4	Accessory Drive and Starter Shaft Oil Retaining Plug Spring Wire Dia 0.125	Load @ 0.89 Height	52.2 lb	63.8 lb	47 lb
444	2	4	Accessory Drive and Starter Shaft and Oil Retaining Plug	Dia	0.0000	0.0015T	0.0000
445	2	4	Accessory Drive and Starter Shaft and Rear Bushing	Dia	0.0040L	0.0060L	0.0070L
446	2	4	Accessory Drive and Starter Shaft Bushing and Supercharger Rear Cover	Dia	0.0050T	0.0070T	0.0050T
447	6	6	Accessory Drive Gear and Fuel Pump Gear	Backlash	0.0040	------	------
448	6	6	Accessory Drive Gear Spring Wire Dia 0.225 inch	Load @ 1.544 Height	550 lb	625 lb	530 lb
449	2	4	Starter Coupling Spacer and Accessory Drive and Starter Shaft Oil Retaining Plug	Dia	0.0020L	0.0070L	0.0070L
450	2	4	Starter Coupling Locating Dimension After obtaining clearance per item No. 442 machine spacer "R" to obtain this dimension with the starter coupling located in extreme "IN" position (forward against accessory shaft with accessory shaft resting against forward thrust ring).		1.6990	1.7040	------
451	2	4	Generator Gear Shaft Bushing and Supercharger Rear Cover	Dia	0.0015T	0.0035T	0.0015T

TABLE 9-15 - Continued

Ref. No.	Sheet No. Models 76/86	80	Description		Blueprint Minimum	Maximum	Service Limit
452	2	4	Generator Drive Gear and Bushing	Dia	0.0025L	0.0045L	0.0080L
453	2	4	Generator Drive Gear	End	0.0160L	0.0430L	0.0600L
454	2		Generator Drive Gear and Clutch Roller Retaining Gear	Backlash	0.0040	------	------
455	2		Clutch Roller Cage and Roller	Dia	0.0014L	0.0036L	0.0050L
456	2		Clutch Roller Cage and Roller 7.2:1 and 10.14:1 Ratio.	End	0.0013L	0.0037L	0.0050L
457	6	6	Supercharger Clutch Control Valve Sleeve and Supercharger Rear Cover	Dia	0.0000T	0.0012T	0.0012T
458	6	6	Supercharger Clutch Oil Control Valve Spring Wire Dia 0.055	Load @ 0.960 Height	5 lb	------	4.5 lb.
459	6	6	Supercharger Clutch Control Valve and Sleeve	Dia	0.0005L	0.0015L	0.0015L
460	2	4	Supercharger Rear Housing and Sleeve	Dia	0.0030T	0.0050T	0.0030T
461	2	4	Supercharger Impeller Inducer and Impeller Pinch at OD of inducer.		0.0030T	0.0070T	0.0030T
462	2	4	Supercharger Front Housing and Diffuser Plate Vanes	Pinch	0.0050	0.0120	------
			Shim to obtain this pinch only when engine is reassembled with new supercharger front housing, new supercharger rear housing or new diffuser. Otherwise reassemble with same thickness shim used before overhaul				
463	2	4	Supercharger Rear Housing and Intermediate Impeller Drive Shaft Bushing	Dia	0.0025T	0.0045T	0.0025T
464	2	4	Supercharger Front and Rear Housing	Dia	0.0020T	0.0040L	0.0060L
465	2	4	Supercharger Rear Housing and Diffuser Plate	Dia	0.0040T	0.0060T	0.0040T

TABLE 9-15 - Continued

Ref. No.	Sheet No. Models 76/86	80	Description		Blueprint Minimum	Blueprint Maximum	Service Limit
466	6	6	Supercharger Rear Cover and Oil Strainer Pilot Extension	Dia	0.0000	0.0040L	0.0050L
467	6	6	Supercharger Rear Cover and Gun Synchronizer Drive Shaft Thrust Button	Dia	0.0010T	0.0030T	0.0010T
468		4	Impeller Drive Gear and Pinion and Front Bushing	Dia	0.0030L	0.0050L	0.0065L
469		4	Impeller Drive Gear and Pinion and Impeller Shaft	Backlash	0.0030	------	------
470		4	Impeller Drive Gear and Pinion and Accessory Drive Gear	Backlash	0.0040	------	------
471		4	Generator Drive Gear and Intermediate Drive Gear	Backlash	0.0040	------	------
472		4	Impeller Drive Gear and Pinion and Rear Bushing	Dia	0.0030L	0.0050L	0.0065L
473		4	Impeller Drive Gear and Pinion Support and Bushing	Dia	0.0010T	0.0030T	0.0010T
474		4	Impeller Drive Gear and Pinion Support and Supercharger Rear Cover	Dia	0.0000	0.0030T	0.0000
475		4	Impeller Drive Gear and Pinion Shaft	End Play	0.0230L	0.0470L	0.0550L
476	6	6	Oil Pump Drive Gear and Accessory Drive Gear	Backlash	0.0040	------	------
477	6	6	Fuel Pump Drive Shaft Thrust Button and Supercharger Rear Cover	Dia	0.0010T	0.0030T	0.0010T
478	6	6	Fuel Pump Drive Shaft and Plug	Dia	0.0005T	0.0020T	0.0005T
479	6	6	Fuel Pump Drive Shaft	End	0.0120L	0.0330L	0.0400L
480	6	6	Fuel Pump Drive Shaft Support and Supercharger Rear Cover	Dia	0.0000	0.0030L	0.0040L
481	6	6	Fuel Pump Drive Shaft Support and Bushings	Dia	0.0010T	0.0030T	0.0010T

TABLE 9-15 - Continued

Ref. No.	Sheet No. Models 76/86	80	Description		Blueprint Minimum	Blueprint Maximum	Service Limit
482	6	6	Fuel Pump Drive Shaft Support and Oil Seal	Dia	0.0010T	0.0060T	0.0010T
500	6	6	Fuel Pump Drive Shaft and Bushings	Dia	0.0010L	0.0030L	0.0080L
501	9	9	Fuel Pump and Dual Accessory Drive Gear Shaft and Plug	Dia	0.0005T	0.0035T	0.0005T
502	9	9	Fuel Pump and Dual Accessory Drive Gear Shaft and Bushing	Dia	0.0010L	0.0030L	0.0080L
503	9	9	Fuel Pump and Dual Accessory Drive Gear Shaft Bushing and Supercharger Rear Cover	Dia	0.0010T	0.0030T	0.0010T
504	9	9	Fuel Pump and Dual Accessory Drive Shaft	End	0.0210L	0.0480L	0.0600L
505	9	9	Magneto Drive Gear and Accessory Drive Gear	Backlash	0.0040	------	------
506	9	9	Magneto Drive Shaft Bushing and Supercharger Rear Cover	Dia	0.0010T	0.0030T	0.0010T
507	9	9	Magneto Drive Shaft and Bushing	Dia	0.0010L	0.0030L	0.0080L
508	9	9	Magneto and Gun Synchronizer Drive Shaft and Plug	Dia	0.0005T	0.0035T	0.0005T
509	9	9	Magneto Drive Shaft	End	0.0140L	0.0550L	0.0600L
510	6	6	Oil Strainer Relief Valve Spring Wire Dia 0.055	Load @ 1.20 Height	7.13 lb	8.92 lb	6.40 lb
511	9	9	Oil Pump Drive Gear Spring Wire Dia 0.071	Load @ 1.78 Height	8 lb	10 lb	7.2 lb
512	9	9	Oil Pump Drive Gear and Retainer	Dia	0.0005T	0.0035T	0.0005T
513	9	9	Oil Pump Drive Gear	End	0.0370L	0.0580L	0.0650L
514	9	9	Oil Pump Drive Gear and Bushing	Dia	0.0010L	0.0030L	0.0060L
515	9	9	Oil Pump Drive Gear Bushing and Supercharger Rear Cover	Dia	0.0010T	0.0035T	0.0010T
516	9	9	Oil Pump End Plate and Supercharger Rear Cover	Dia	0.0000	0.0020L	0.0030L

TABLE 9-15 - Continued

Ref. No.	Sheet No. Models 76/86	80	Description		Blueprint Minimum	Blueprint Maximum	Service Limit
517	9	9	Oil Pump Drive Shaft Gear and Oil Suction Pump Driven Gear	Backlash	0.0040	------	------
518	9	9	Oil Pump End Plate and Oil Suction Pump Driven Gear	Dia	0.0000	0.0015L	0.0015L
519	9	9	Oil Pump Gear Shaft and Oil Suction Pump Driven Gear	Dia	0.0015L	0.0030L	0.0040L
520	9	9	Oil Pump Drive Shaft Gear and Oil Pump End Plate	Dia	0.0020L	0.0035L	0.0050L
521	9	9	Oil Pump Check Valve Body and Pump Body	Dia	0.0010T	0.0025T	0.0010T
522	9	9	Oil Pump Check Valve Spring				
			Wire Dia 0.054 Total No. of Coils 19	Load @ 2.00 Height	7.5 lb	8.0 lb	6.5 lb
			Wire Dia 0.047 Total No. of Coils 19	Load @ 2.00 Height	3.5 lb	4.0 lb	3.2 lb
			Wire Dia 0.47 Total No. of Coils 17	Load @ 2.00 Height	1.04 lb	1.24 lb	1.04 lb
524	9	9	Oil Pump Drive Shaft and Body	Dia	0.0020L	0.0035L	0.0050L
525	9	9	Oil Pump Drive Shaft Gear and Body	End	0.0040L	0.0070L	0.0080L
526	9	9	Oil Pump Drive Shaft Gear and Oil Pressure Pump Drive Shaft Gear	Dia	0.0005L	0.0020L	0.0020L
527	9	9	Oil Suction Pump Drive Gear Shaft and Body	Dia	0.0010T	0.0025T	0.0010T
529	9	9	Oil Suction Pump Driven Gear and Body	End	0.0040L	0.0070L	0.0080L
530	9	9	Oil Pressure Pump Driven Shaft Gear and Body	Dia	0.0020L	0.0035L	0.0050L
531	9	9	Oil Pressure Pump Driven Gear and Body	Dia	0.0050L	0.0090L	0.0090L
532	9	9	Oil Pressure Pump Drive Shaft Gear and Driven Shaft Gear	Backlash	0.0040	------	------

TABLE 9-15 - Continued

Ref No.	Sheet No. Models 76/86	80	Description		Blueprint Minimum	Blueprint Maximum	Service Limit
533	9	9	Oil Pressure Pump Driven Shaft Gear and Body	End	0.0050L	0.0090L	0.0120L
534	9	9	Oil Pressure Relief Valve Spring Wire Dia 0.063 Load @ 1.38 Height 0.063 1.066 Height		6.0 lb 20.0 lb	8.0 lb 24.0 lb	5.5 lb 19.0 lb
535	9	9	Oil Pressure Pump Drive Shaft Gear and Cover	Dia	0.0020L	0.0035L	0.0050L
536	9	9	Oil Pressure Pump Drive Shaft Gear and Tachometer Drive Shaft Gear	Dia	0.0005L	0.0020L	0.0050L
537	9	9	Oil Pressure Pump Driven Shaft Gear and Cover	Dia	0.0020L	0.0035L	0.0050L
538	6	6	Oil Pump Drive Gear and Magneto Drive Gear	Backlash	0.0040	------	------
539	9	9	Oil Pump Check Valve Oil Seal Ring	Gap	0.0054	0.0126	0.0126
540	9	9	Oil Pump Check Valve and Oil Seal Ring	Side	0.0020L	0.0060L	0.0060L
541	9	9	Oil Pressure Relief Valve and Body	Dia	0.0020L	0.0035L	0.0045L
542	9	9	Tachometer Drive Shaft Gear and Drive Shaft Gear (Electrical)	Backlash	0.0040	------	------
543	9	9	Tachometer Drive Shaft Gear and Sleeve	Dia	0.0005T	0.0015T	0.0005T
544	9	9	Tachometer Drive Shaft Oil Seal Thrust Spring Wire Dia 0.048, Compressed 0.100 inch		4.5 lb	5.5 lb	4.0 lb
545	9	9	Tachometer Drive Shaft Gear and Oil Seal Thrust Spring Retainer	Dia	0.0030L	0.0050L	0.0080L
546	9	9	Tachometer Drive Shaft Gear (Electrical) and Bushings (Propeller End)	Dia	0.0020L	0.0035L	0.0050L
547	9	9	Tachometer Drive Shaft Gear Housings and Bushings	Dia	0.0015T	0.0035T	0.0015T
548	9	9	Tachometer Drive Shaft Gear Intermediate and Bushing (Propeller End)	Dia	0.0020L	0.0035L	0.0050L

TABLE 9-15 - Continued

Ref. No.	Sheet No. Models 76/86	80	Description		Blueprint Minimum	Maximum	Service Limit
549	9	9	Tachometer Drive Shaft Gear Housing Cover and Bushings	Dia	0.0015T	0.0035T	0.0015T
550	9	9	Tachometer Drive Shaft Gears (Electrical) and Bushings (Anti-Propeller End)	Dia	0.0020L	0.0035L	0.0050L
551	9	9	Tachomater Drive Shaft Gear Housing Cover and Oil Seal	Dia	0.0010T	0.0070T	0.0010T
552	9	9	Tachometer Drive Shaft Gears (Electrical) and Intermediate	Backlash	0.0040	------	------
553	9	9	Tachometer Drive Shaft Gear Intermediate End		0.0070L	0.0230L	0.0250L
554	9	9	Tachometer Drive Shaft Gear Electrical	End	0.0070L	0.0230L	0.0250L
555	9	9	Tachometer Drive Shaft Gear Electrical	End	0.0070L	0.0230L	0.0250L
556	9	9	Tachometer Drive Shaft Gear Electrical and Intermediate	Backlash	0.0040	------	------
557	9	9	Tachometer Drive Shaft Intermediate Gear and Bushings (Anti-Propeller End)	Dia	0.0020L	0.0035L	0.0050L
601	10	10	Accessory Drive Idler Gear and Bushing	Dia	0.0015L	0.0035L	0.0080L
602	10	10	Accessory Drive Idler Gear	End Clear	0.0080	0.0180	0.0380
603	10	10	Accessory Drive Idler Gear Bushing and Cover and Housing	Dia	0.0030T	0.0050T	0.0030T
604	10	10	Accessory Drive Idler Gear and Intermediate Shaft Gear	Backlash	0.0040	------	------
605	10	10	Accessory Drive Intermediate Shaft and Bushing	Dia	0.0020L	0.0040L	0.0080L
606	10	10	Accessory Drive Intermediate Shaft	End Clear	0.0060	0.0240	0.0400
607	10	10	Accessory Drive Intermediate Shaft Bushing and Cover and Housing	Dia	0.0035T	0.0055T	0.0035T
608	10	10	Upper and Lower Accessory Drive Gears and Bushings (Housing End)	Dia	0.0020L	0.0040L	0.0080L
609	10	10	Upper and Lower Accessory Drive Gears and Bushings (Cover End)	Dia	0.0015L	0.0035L	0.0080L

TABLE 9-15 - Continued

Ref. No.	Sheet No. Models 76/86	80	Description		Blueprint Minimum	Blueprint Maximum	Service Limit
610	10	10	Upper and Lower Accessory Drive Gears	End Clear	0.0130L	0.0230L	0.0500L
611	10	10	Upper and Lower Accessory Drive Gear Bushing and Cover and Housing	Dia	0.0035T	0.0055T	0.0035T
612	10	10	Accessory Drive Upper and Lower Drive Gears and Idler Gear	Backlash	0.0060	------	------
613			Master Rod Bearing and Knuckle Pin Lock Plate Longitudinal Spline	End Clear	0.0000	0.0200L	0.0200L
614			Oil Pump Check Valve and Check Valve Body	Dia	.002L	.005L	
615			Spring - Oil Pump Check Valve Wire Diameter .054, Total No. of Coils 18	Load @ 1.62 Height	2.35#	2.45#	
616			Oil Pressure Relief Valve and Relief Valve Body	Dia	.0015L	.0030L	
617			Spring - Oil Pressure Relief Wire Diameter .074, Total No. of Coils 20	Load @ 2.12 Height Load @ 1.81 Height	23# 31#	27# 35#	
618			Oil Pump Drive Shaft Gear Shaft and Body	Dia	.0020L	.0035L	
619			Oil Pump Drive Shaft Gear Shaft and End Plate	Dia	.0020L	.0035L	
620			Oil Pump Drive Shaft Gear/Suction Pump Driven Gear and Body	End Play	.004	.007	
621			Oil Pressure Pump Driven Shaft Gear Shaft and Body	Dia	.0020L	.0035L	
622			Oil Pressure Pump Driven Shaft Gear and Cover	Dia	.0020L	.0035L	
623			Oil Pressure Pump Driven Shaft Gear Shaft and Oil Suction Pump Driven Gear	Dia	.0010L	.0025L	
624			Oil Pump Drive Shaft Gear and Oil Suction Pump Driven Gear	Backlash	.004		

TABLE 9-15 - Continued

Ref. No.	Sheet No. Models 76/86	80	Description	Blueprint Minimum	Blueprint Maximum	Service Limit
625			Oil Pressure Pump Drive Shaft Gear/Driven Shaft Gear and Body End Play	.004	.007	
626			Oil Pressure Pump Drive Shaft Gear Shaft and Cover Dia	.0020L	.0035L	
627			Oil Pump Drive Shaft Gear/Suction Pump Driven Gear and Body Dia	.005L	.009L	
628			Oil Pressure Pump Drive Shaft Gear/ Driven Shaft Gear & Body Dia	.005L -	.009L	
629			Spring - Scavenge Oil Strainer Check Valve, Wire Diameter .059, Total No. of Coils 20-25 Load @ 2.20 Height	3.02#	3.42#	
			The following torque values are in inch-pounds and are based on parts lubricated with engine oil unless otherwise specified.			
900	1	3	Propeller Shaft Hydro-Oil Connection Cover Nut Use Federal Specification TT-A-580a. anti-seize compound on threads.	2000	2200	------
901	1	3	Crankcase Front Cover Attaching Nut and Screw	350	400	------
902		3	Carrier Ring to Propeller Shaft Attaching Bolt Nut	750	850	------
903	1		Reduction Gear Drive Pinion Lock Nut (.666:1 Ratio)	350	400	------
904	1		Cam Guide to Cam and Oil Sump Pump Drive Supporting Attaching Screw	60	65	------
905	7	7	Crankcase Front Section to Crankcase Main Section Front Half Attaching Screws	425	450	------
906	1	3	Counterweight Attaching Bolt Nut	600	700	------
907	2	4	Crankcase Attaching Bolt Nut	500	550	------

TABLE 9-15 - Continued

Ref. No.	Sheet No. Models 76/86	80	Description	Blueprint Minimum	Blueprint Maximum	Service Limit
908	1	3	Propeller Shaft Thrust Bearing Nut Use Pure White Lead or Federal Specification TT-A-580a, anti-seize compound on threads.	18400	19600	------
909	1	3	Push Rod Housing Connection Nut Tappet End Use Federal Specification TT-A-580a, anti-seize compound on threads and a thin coat of MIL-G-6032A grease on packing and washers.	225	250	------
910	5	5	Valve Clearance Adjusting Screw Lockscrew Adjust valve clearance per item No. 254. Tighten lockscrews having a 3/8 inch hexagon to 175 - 225 inch-pounds. Tighten lockscrews having a 7/16 inch hexagon to 250 - 300 inch-pounds. Check adjusting screw tighteness. Adjusting screw must not move when 350 inch-pounds torque is applied in a loosening direction. A maximum of 250 inch-pounds may be applied to lockscrews having a 3/8 inch hexagon in order to maintain a minimum of 350 inch-pounds locking torque on the adjusting screw.			
911	9	9	Oil Pump Attaching Nut	85	100	------
912	5	5	Push Rod Housing Connection Nut Cylinder Head End Use Federal Specification TT-A-580a, anti-seize on threads.	400	450	------
913			Exhaust Valve Guide Retaining Nut Tighten nut finger tight. Loosen a minimum of 15 degrees to obtain alignment of holes for installation of lock pin. Do not loosen in excess of 40 degrees.			
914	1	3	Piston Oil Check Valve Assembly to Crankshaft Angular location of the flat of head may vary freely at maximum torque.	100	150	------
915	2,8	8	Intake Pipe Packing Nut Use a 50 - 50 mixture (by volume) of Federal Specification TT-A-580a, anti-seize compound and MIL-M-7866A molybdenum disulfide powder on packing and threads.	250	300	------

TABLE 9-15 - Continued

Ref. No.	Sheet No. Models 76/86	80	Description	Blueprint Minimum	Blueprint Maximum	Service Limit
916	5	5	Exhaust Pipe Clamp Bolt Nut Lubricate with FEL-PRO C5 on shank and threads			
			0.3125-24 thread	140	160	------
			0.375-24 thread	90	110	------
917	7	7	Balanceweight and Gear Retaining Bolt Nut (Upper)	175	250	------
918	7	7	Balanceweight and Gear Retaining Bolt Nut (Lower)	175	250	------
919	1	3	Reduction Driving Gear Nut	9600	14400	------
920	2	4	Knuckle Pin Retaining Bolt (Stretch)	0.006	0.009	
			0.3125-24 thread			
			0.375-24 thread			
921	2	4	Crankshaft Rear Main Bearing Nut Lockscrew Stake lip of tab washer into slot of screw.	45	55	------
922	2	4	Impeller Shaft Front Nut	3200	3700	- - -
923	2	4	Impeller Shaft Bearing Support to Supercharger Front Housing Attaching Screws	50	70	- - -
924	9	9	Oil Pump Check Valve Retainer	100	150	- - -
925	9	9	Oil Pressure Relief Valve Body	350	400	- - -
926	9	9	Oil Pressure Relief Valve Nut	125	150	- - -
927	9	9	Oil Pressure Relief Valve Cap	75	100	- - -
928	1	3	Oil Sump Scavenge Pump Drive Gear and Pinion Bolt Nut	70	100	- - -
929	10	10	Dual Accessory Drive Housing to Supercharger Rear Cover Attaching Nut	135	150	- - -
930	10	10	Dual Accessory Drive Housing Flange to Dual Accessory Housing Cover Attaching Nut	135	150	- - -

TABLE 9-15 - Continued

Ref. No.	Sheet No. Models 76/86	80	Description		Blueprint Minimum	Blueprint Maximum	Service Limit
931	5	5	Intercylinder Air Deflector Upper Clamp Bolt Nut		35	50	- - -
932			Rocker Arm Spacer and Rocker Hub Bolt	Dia.	0.0007L	0.0032L	0.0040L
933			Rocker Arm Spacer and Bushing	Dia.	0.0015L	0.0030L	0.0060L
934			Rocker Arm Spacer and Rocker Arm Thrust Washer	Dia.	0.0015L	0.0030L	0.0040L
935			Rocker Arm Thrust Washer and Rocker Arm - End Clearance Before Torquing Rocker Hub Bolt		0.0075L	0.0215L	0.0300L
			End Clearance After Torquing Rocker Arm Bolt		0.004L		
936			Rocker Arm Spacer and Rocker Hub Bolt Bushing	End	0.0005L	0.0095L	0.0120L
937			Impeller Shaft Oil Seal Front Sleeve and Ring		0.002L	0.006L	0.006L
939			Impeller Shaft Oil Seal Rear Sleeve and Ring		0.002L	0.006L	0.006L
941			Rocker Arm Bushing and Bearing (Plain Bearing)	Side	0.0040L	0.0160L	0.0250L
942			Oil Pump Check Valve Body		300	375	
943			Oil Pressure Relief Valve Adj. Screw Lock Nut		125	150	
944			Oil Pressure Relief Valve Cap		72	100	
945			Oil Pressure Relief Valve Body		350	400	
946			Pre-Oil Check Valve		300	375	
947			Pre-Oil Check Valve Cap		75	100	
948			Scavenge Oil Strainer Assembly		200	225	
949			Scavenge Oil Strainer Housing Plug		175	200	
950	1	3	Crankcase Front Section to Stationary Reduction Gear Bolt		125	140	

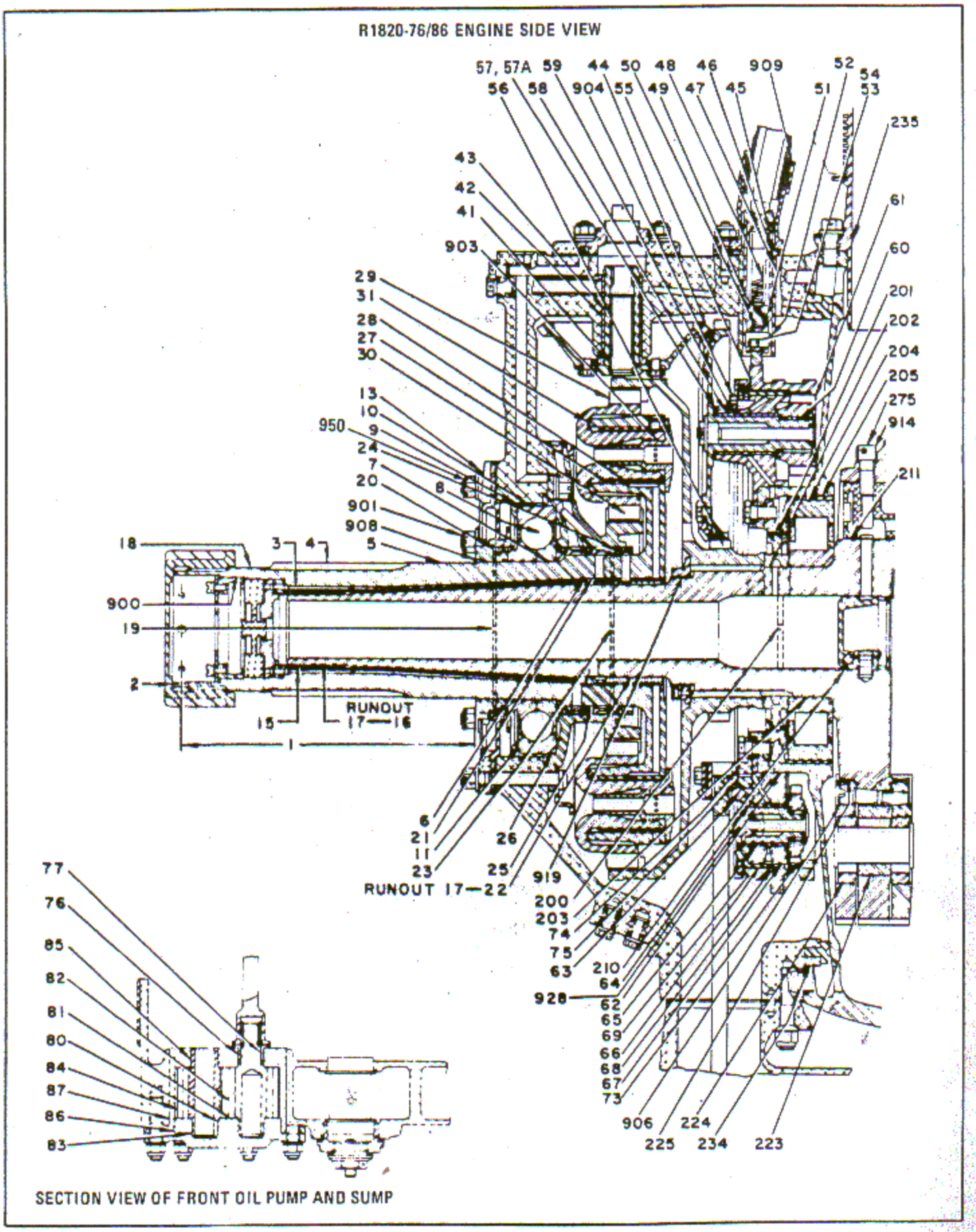

Figure 9-2. Limits Chart (Sheet 1 of 10)

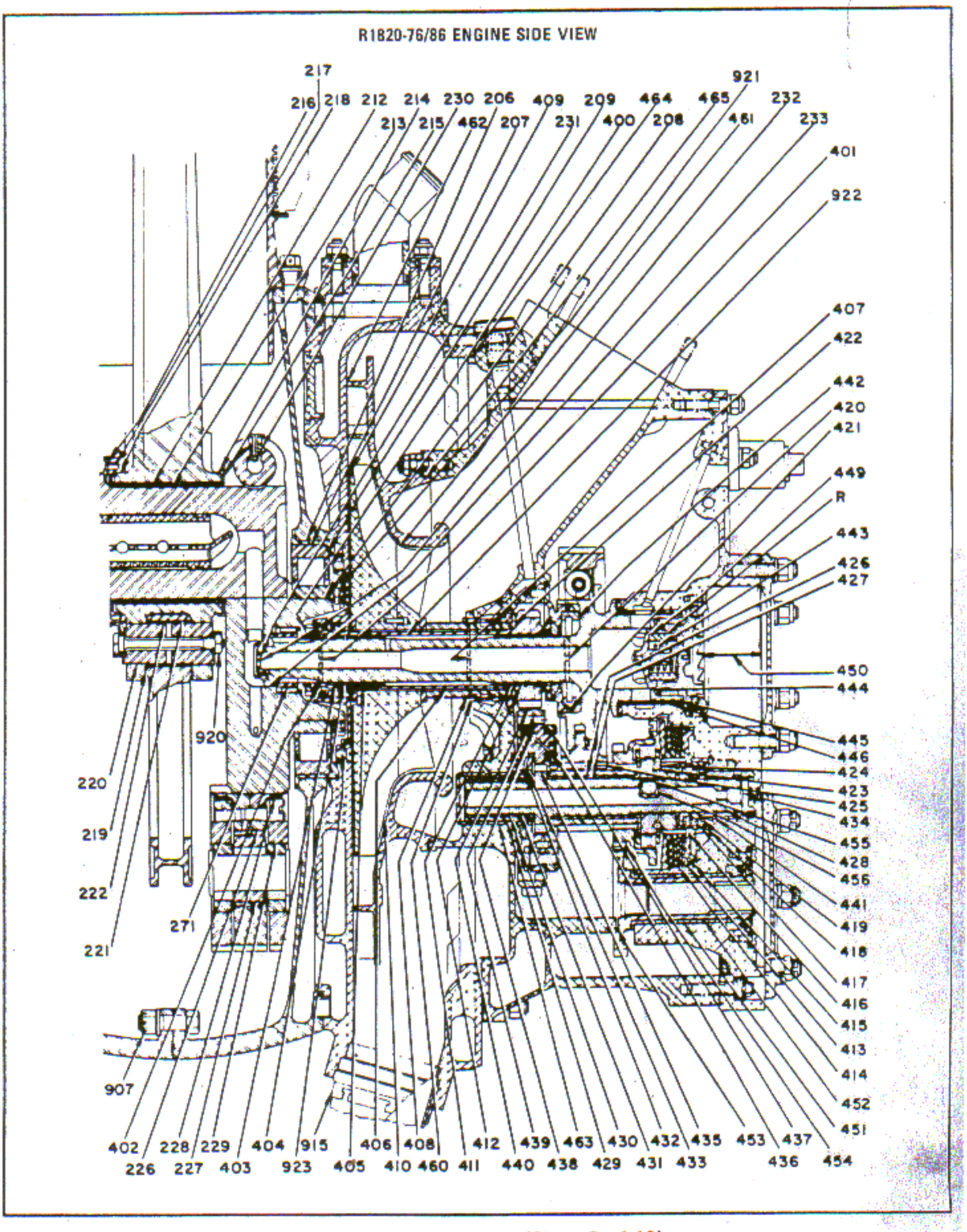

Figure 9-2. Limits Chart (Sheet 2 of 10)

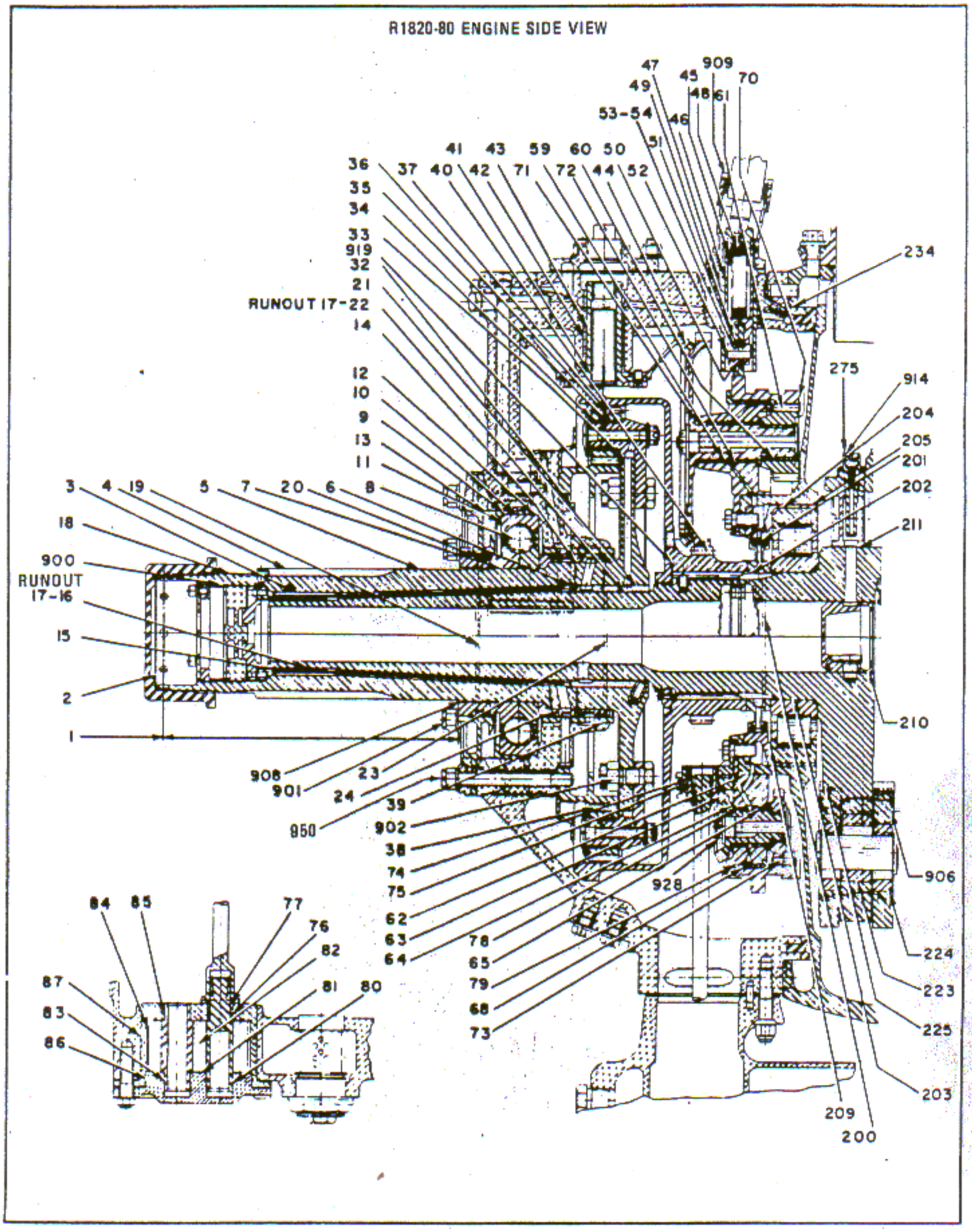

Figure 9-2. Limits Chart (Sheet 3 of 10)

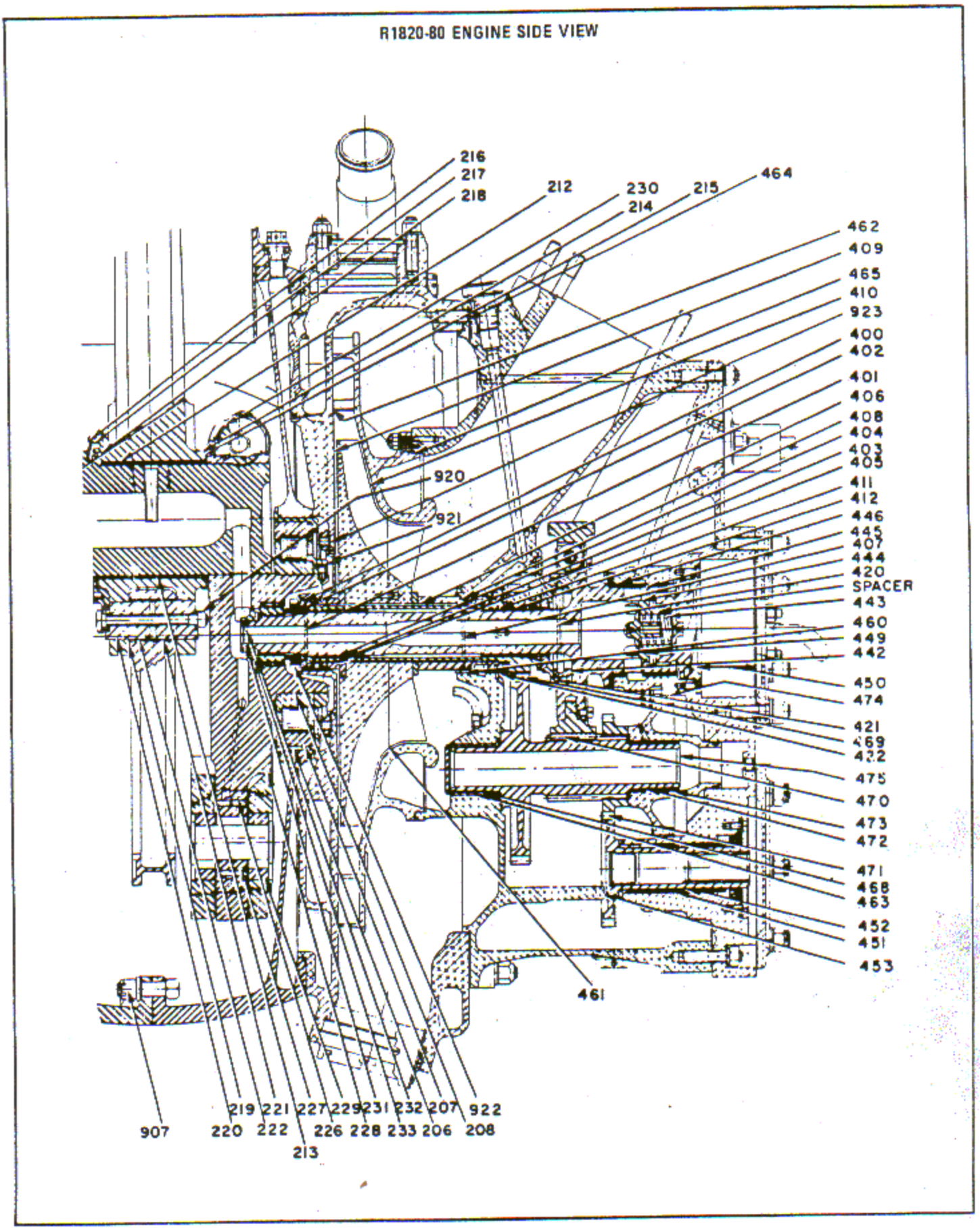

Figure 9-2. Limits Chart (Sheet 4 of 10)

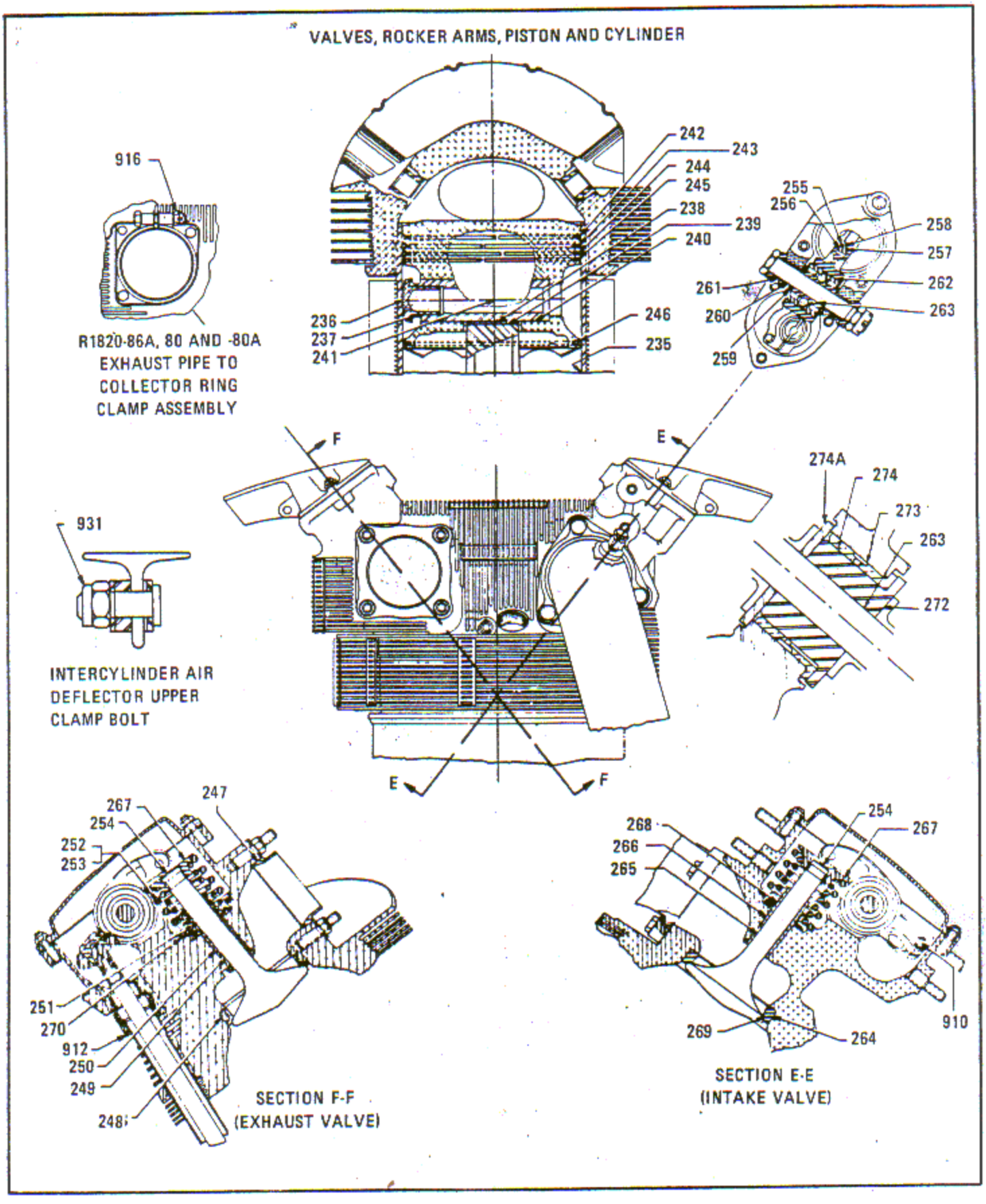

Figure 9-2. Limits Chart (Sheet 5 of 10)

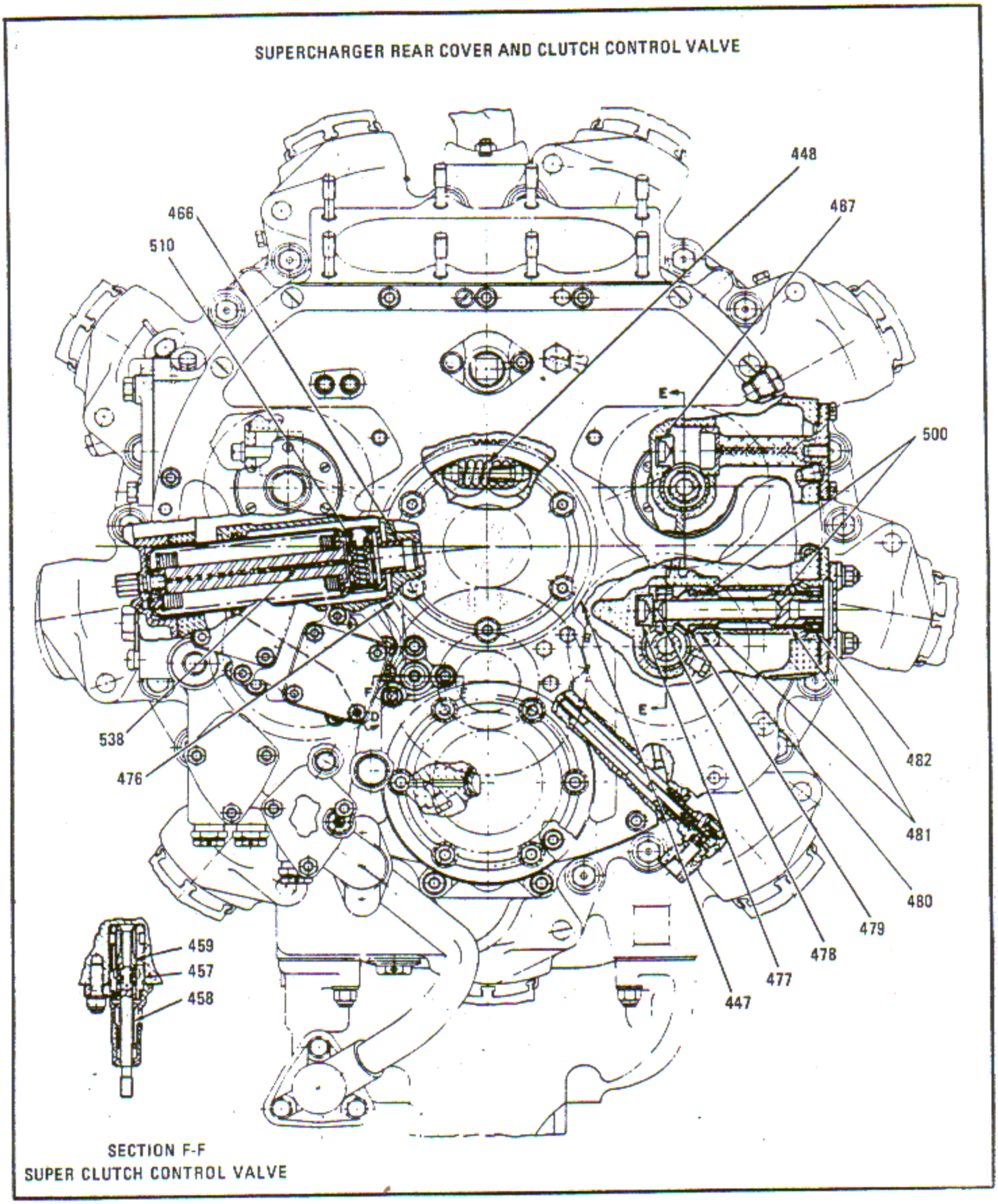

Figure 9-2. Limits Chart (Sheet 6 of 10)

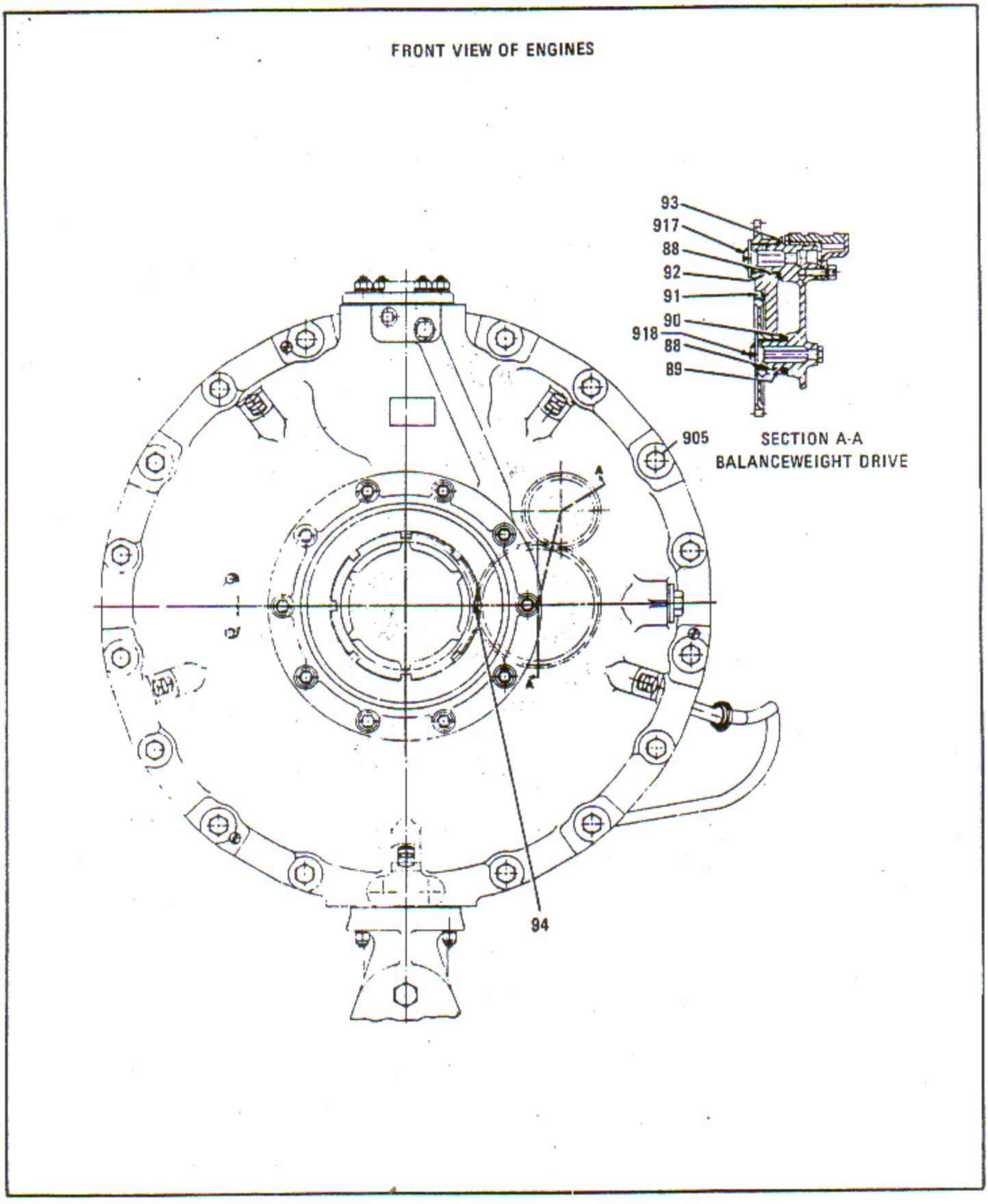

Figure 9-2. Limits Chart (Sheet 7 of 10)

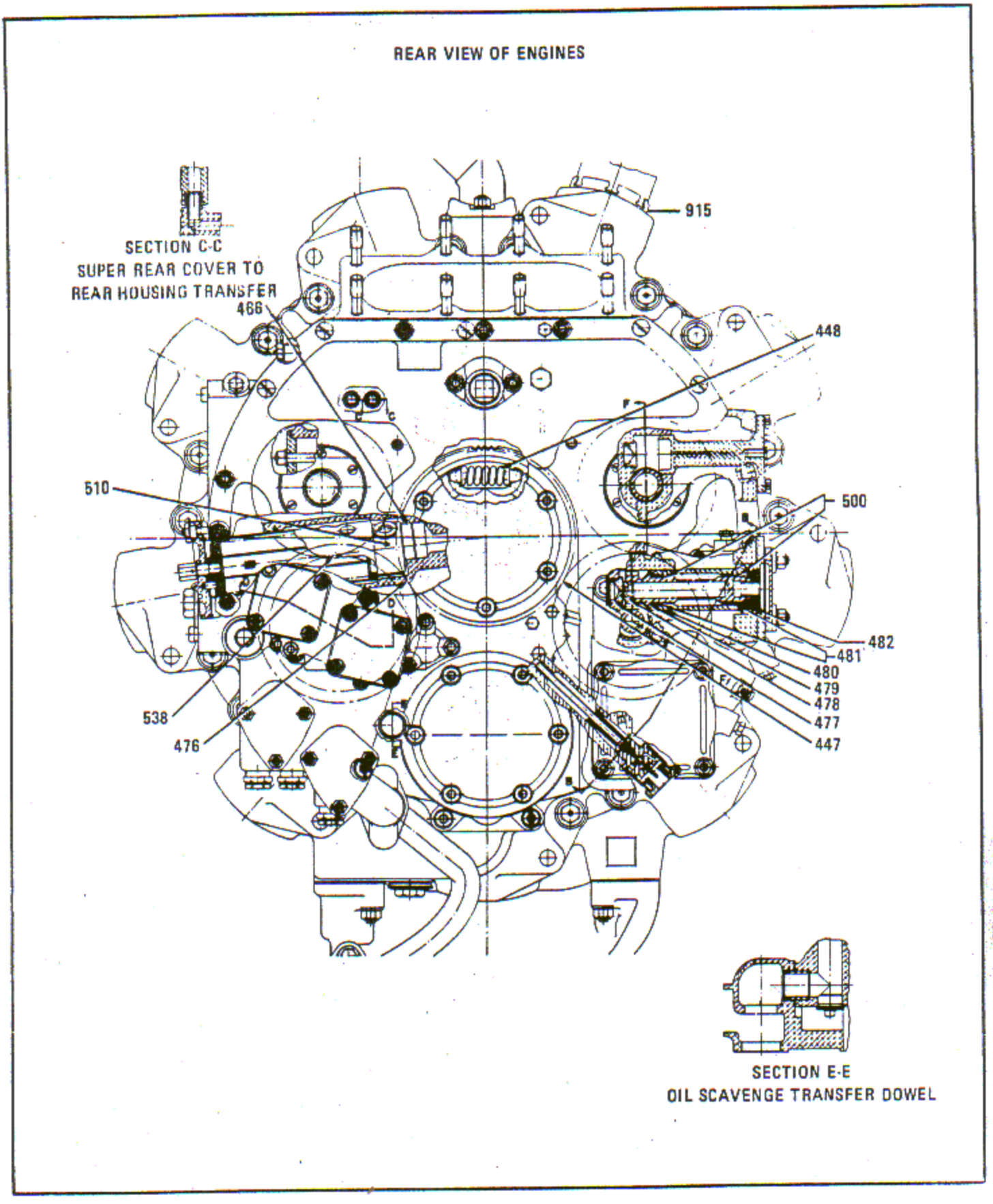

Figure 9-2. Limits Chart (Sheet 8 of 10)

REAR OIL, PUMP AND ACCESSORY DRIVE

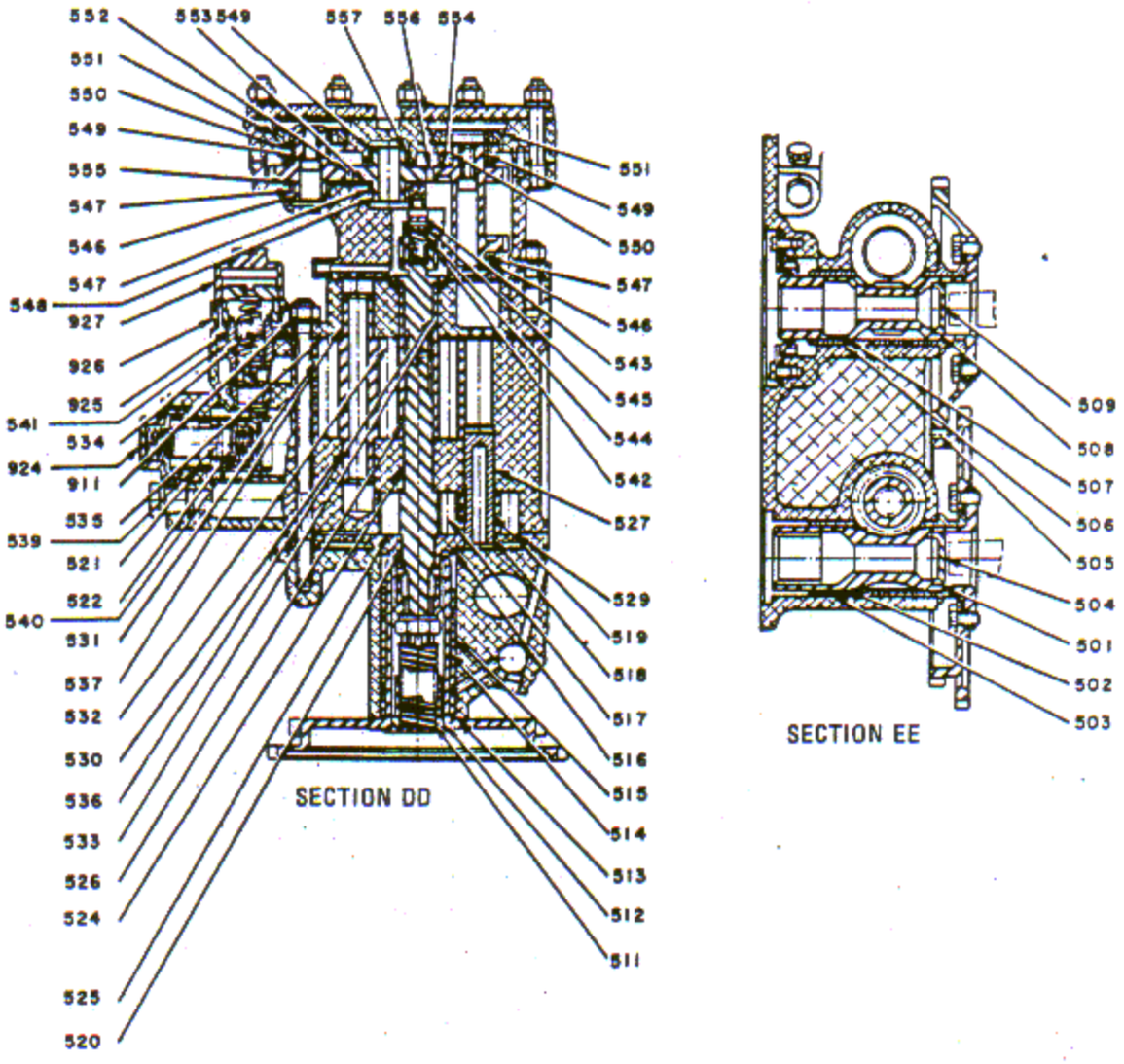

Figure 9-2. Limits Chart (Sheet 9 of 10)

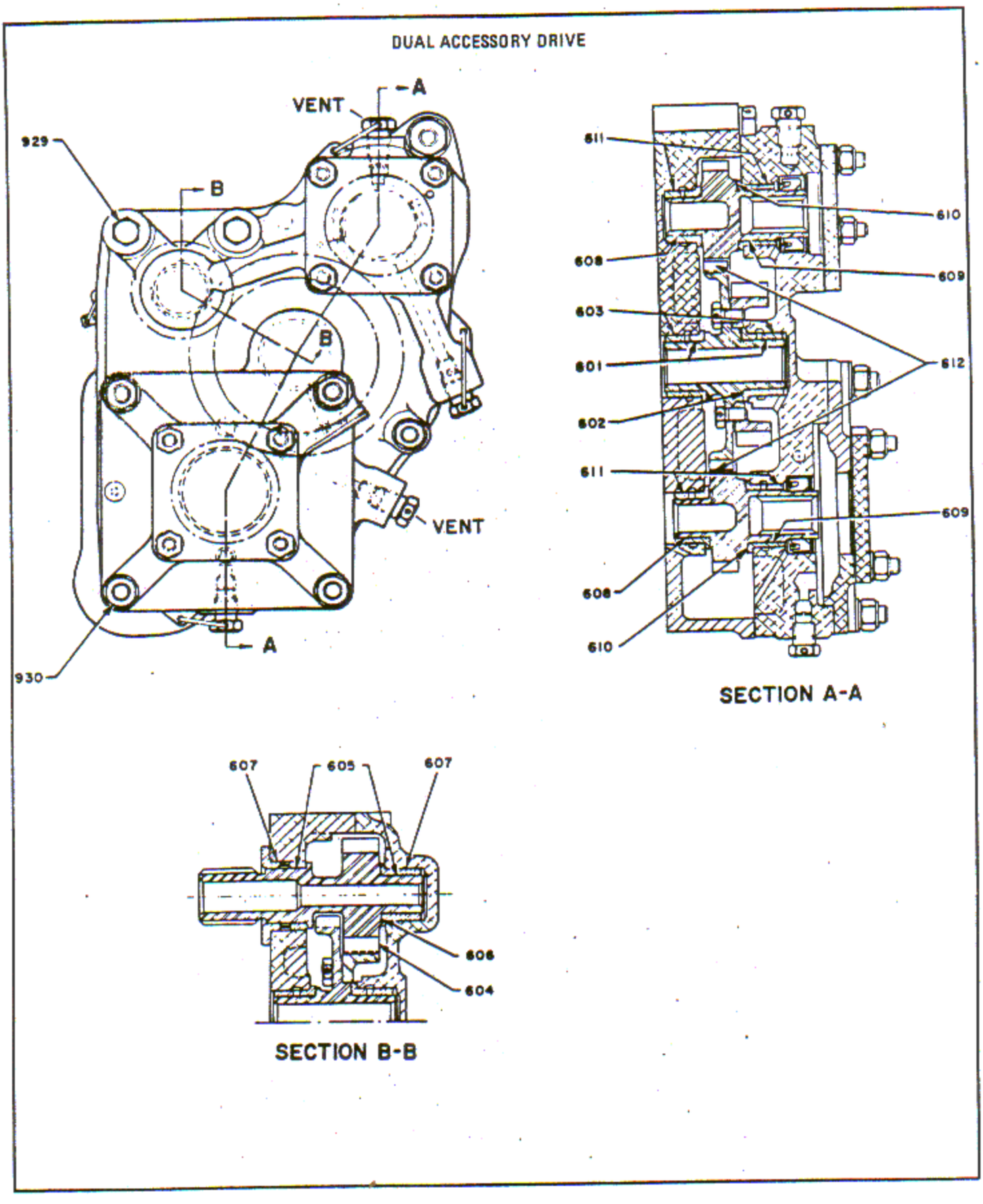

Figure 9-2. Limits Chart (Sheet 10 of 10)

SECTION X

FINAL TEST

10-1. GENERAL. This section provides recommended testing after overhaul, standard run-in procedures, performance limits and information on test equipment.

10-2 RUN-IN FOLLOWING MINOR PARTS REPLACEMENT. No run-in is necessary for an installed engine which has undergone minor replacement and/or replacement of cylinder and piston assemblies.

NOTE

Ground running to check the installation of an engine in an aircraft should be held to a minimum, as prolonged ground running may result in excessive cylinder barrel and head temperatures.

10-3. TEST EQUIPMENT. Specifications and detailed designs of required test equipment may be procured from Janke and Co., 38-44 Railroad Avenue, Hackensack, New Jersey. Use sling, group 42, when installing and removing the engine from the test stand.

10-4. TEST STAND LUBRICATION SYSTEM.

NOTE

Test cell lubrication filtration systems shall be capable of removing 40 micron or smaller particles.

10-5. The following are the minimum requirements for an adequate test stand lubrication system: At least one full flow filter, capable of removing particles down to 10 microns, must be installed in the test stand lubrication filter. The filter may be installed in either the oil-in or oil-out lines. Preferably, the filters should be installed in both the oil-out and oil-in lines. Oil-in and oil-out lines must be seized to prevent exceeding recommended maximums of 6 inches Hg gage suction on the oil-in and 40 psi gage pressure on the oil-out lines during TAKE-OFF operation at minimum oil-in temperature.

10-6. The weigh oil tank and scale must provide for a minimum capacity of 1-1/2 times maximum oil flow per minute. Weigh tank baffles should be provided to permit a smooth oil return and the elimination of entrained air from the system. The oil trap tank must provide for a minimum capacity equal to the maximum oil flow per minute.

NOTE

No supplementary cooling equipment is required for block testing of engines when conventional test clubs are used for power absorption and when a standard straight type test cowl is used.

10-7. THERMOCOUPLES. The initial engine test should be run with thermocouples installed on all cylinders to establish a hot head pattern; thereafter, temperatures of four hot heads should be recorded during routine testing.

10-8. TEST CLUBS. When conventional wooden test clubs are used, a sufficient number of clubs must be maintained by overhaul activities to compensate for variations in climatic conditions. When a modified flight propeller has been set at a pitch angle calibrated for specific atmospheric density conditions, it must be operated as a fixed pitch propeller for power checks without resorting to pitch change mechanisms. Change in blade setting during test operation to obtain or maintain scheduled speed at desired MAP may conceal faulty operation of engine or engine accessories.

10-9. Automatic governing should not be used, as attainment of specified RPM and MAP is an indication of satisfactory engine performance only when a propeller of known blade setting and power absorption is used. For specific instructions for calibrating modified Curtiss Electric flight propellers and wooden test clubs refer to paragraphs 10-35 through 10-43.

10-10. TEST PROCEDURE.

NOTE

The high capacity oil pump scavenge strainer may be removed prior to engine pre-oiling and reinstalled after the test cell runs are completed. During these operations, a locally manufactured blank-off plate will be installed if the strainer is removed.

10-11. ENGINE PRE-OILING. (See tool group 42.)

10-11A. Filling the engine oil passages with oil under pressure from an external source is termed pre-oiling. This procedure ensures satisfactory lubrication at an initial start when the engine oil system cannot supply adequate pressure.

a. Pre-oil the engine with lubricating oil, Specification MIL-L-6082, Grade 1100, or MIL-L-22851, Grade 1120. Heat the oil to 71 - 105°C (160 - 220° F).

b. Incorporate a suitable check valve in the pre-oil supply line to prevent the possibility of feedback during engine operation.

c. Filter the oil used for pre-oiling through a 10 micron filter.

CAUTION

Do not use filters containing abrasive materials.

10-12. OIL INLET LINE. In the event it is necessary to disconnect the oil inlet line; or any part of the engine oil supply system that would permit air to enter the system, proceed as follows:

a. Remove the oil inlet check valve retainer, spring and valve.

b. With the ignition OFF, crank the engine until air free oil is obtained from the inlet check valve chamber.

NOTE

Permit a minimum of one pint of air free oil to drain from the chamber.

c. Reinstall the check valve, spring and retainer.

10-13. PRESSURE OIL STRAINER. If the pressure oil strainer is removed during the post overhaul test run, observe the following precautions.

NOTE

These precautions are required to ensure a minimum delay in providing oil pressure to the master rod bearing during the next engine start.

a. Remove the strainer assembly and replace it with a clean unit if available. Inspect the strainer and take necessary measures if contamination is noted, prior to cranking the engine.

b. If contamination is not evident after strainer inspection, place the ignition in the OFF position. Crank the engine with the starter until an oil pressure indication is noted.

NOTE

If oil pressure is not noted within the maximum starter cranking period, permit the starter to cool and repeat the cranking procedure.

10-14. PROCEDURE. Engine pre-oiling shall be accomplished utilizing the engine test stand lubricating oil supply system. Pre-oil prior to starting an engine for the first time after overhaul.

a. Ensure that the oil supply tank is filled to its specified capacity with engine lubricating oil, Specification MIL-L-6082, Grade 1100, or MIL-L-22851, Grade 1120.

b. Remove one spark plug from each cylinder.

NOTE

Spark plug removal from the upper cylinders is optional.

c. Using wrench, remove the magnetic chip detector drain plugs from the front oil sump and supercharger rear housing.

d. Bleed and fill the line between the pressure gage or transmitter with oil.

e. Remove the pre-oil plug from the oil pump housing. Install a suitable fitting for attaching the pre-oiling supply hose.

NOTE

If a pre-oil check valve is installed, remove the cap and attach the supply hose.

f. Pump pre-heated oil into the engine until 2 - 3 gallons of oil is drained from the engine and oil pressure is indicated on the main oil pressure gage.

g. Shut off the pre-oiling supply temporarily. Remove the oil inlet check valve retainer, spring and valve.

h. With the ignition OFF, crank the engine until an air free oil flow is obtained from the oil inlet check valve chamber.

NOTE

Permit a minimum of one pint of air free oil to drain from the chamber.

i. Reinstall the check valve, spring and retainer.

j. Permit residual oil to drain from the sump and supercharger housing. Reinstall the magnetic chip detector plugs and the spark plugs.

k. Open the pre-oiling supply and watch for an oil pressure indication on the main oil pressure gage. When oil pressure is observed, crank the engine with the starter until approximately 20 pounds of oil is removed from the test cell engine oil tank quantity scale.

CAUTION

Ensure that the ignition is OFF when cranking the engine.

l. Start the engine as soon as possible following the pre-oiling procedure.

10-15. OIL AND FUEL GRADES. Use lubricating oil, Specification MIL-L-6082, Grade 1100, or MIL-L-22851, Grade 1120. Use fuel conforming to Specification MIL-G-5572, Grade 115/145.

10-16. ENGINE STARTING. For engine starting procedure, operation, troubleshooting, refer to the applicable manual of Service Instructions.

10-17. Prior to and during the initial start of the test, obtain by auxiliary means sufficient oil pressure to register on the main oil pressure gage while the engine crankshaft is being turned over. Maintain this oil pressure until the engine is running under its own power and oil pressure is produced by the engine oil pumps. This will be only several seconds after engine has started to fire.

10-18. TEST WARM-UP.

a. Following the initial warm-up, stop the engine and check for major oil leaks, metallic chips and foreign material.

b. If electrical chip detectors are not installed remove the magnetic plugs and screen strainers from the oil sump and supercharger rear housing and inspect for metallic chips and foreign material.

CAUTION

If any foreign material is found, the source must be determined and the condition corrected before any testing or operation of the engine can be resumed.

10-19. TEST STAND CURVES. When a conventional test club of known power absorption is used, the operator may conduct the test by referring to the test stand curves. For R1820-76 and -86A and -86B Series engines refer to the test curve in figure 10-1, which is used in conjunction with Stromberg Carburetor PD12K18. For models R1820-80 Series use the test curve in figure 10-2 with Stromberg Carburetor PD12K18. The limits of RPM and MAP as shown on the test stand curve indicate the range of satisfactory engine operation for each setting. These limits have been adjusted to specific field test conditions and are given in the form of direct instrument readings in order to eliminate the necessity for computation of BHP by the test operator.

10-20. FUEL CONSUMPTION. The fuel consumption limits given on the test curves are furnished only as an indication of normal engine functioning to guide the test operator, and are not intended to serve as a basis for acceptance or rejection of the fuel metering equipment. Metering characteristics should be determined before engine test, by box or flow bench test in accordance with

the manufacturer's instructions. For observed carburetor air temperature (CAT) other than 15°C (60°F) correct the observed fuel flow in accordance with note 3 on the test curve.

10-21. CARBURETOR SETTING. Carburetors with AUTO RICH and AUTO LEAN settings of 21 - 25 psi inlet pressure use the AUTO RICH mixture setting for all running. Carburetors with RICH and NORMAL settings of 21 - 25 psi inlet pressure use the RICH mixture for warm-up through 1675 RPM, take-off, idle and magneto checks. Use NORMAL mixture for all other running.

10-22. RUN-IN AFTER MAJOR OVERHAUL. After major overhaul, run-in according to the schedule listed below. The length of the horizontal line through the check points on the latest revision of the applicable test curves, in figure 10-1 or figure 10-2, indicates dry air MAP limits acceptable for each RPM. The data for the curve is based on engine operation with hot head temperature above 204°C (400°F). When operating at altitudes above sea level, subtract one inch Hg of MAP for every 3,000 feet above sea level. Clubs must be calibrated under the specific high altitude conditions.

TABLE 10-1. TEST SCHEDULE

Item No.	Duration in Minutes	Operation	Engine RPM	Percent RPM
1	5	Start and Warm-up	1125	45
2	5	Endurance	1450	58
3	10	Endurance	1675	67
4	25	Endurance	1800	72
5	10	Endurance	1850	74
6	45	Endurance	2100	84
7	60	Endurance	2375	95
8	45	Endurance	2500	100
9	Idle for 2 minutes; accelerate to Take-off MAP and RPM for 3 Minutes.			
		(R1820-76C/D, -86A/B)	2700	TO
		(R1820-80A/B)	2800	TO

TABLE 10-2. ACCEPTANCE SCHEDULE

Item No.	Duration in Minutes	Operation	Engine RPM	Percent RPM
10	2		2500	100
11	2	Full throttle		
		(R1820-76C/D, -86B)	2700	
		(R1820-80B)	2800	
12	1*	Magneto Drop	2100	84
13	2		1800	72
14	10	Idle	800-900	

* For R1820-76C/D and -86A/B models, allow sufficient time to perform 2 complete clutch shifting cycles.

10-23. MAGNETO CHECK. During operation of item 6, conduct a magneto check. Loss of engine speed must not exceed 100 RPM while operating on each magneto.

CAUTION

Operation on one magneto at powers above 2100 RPM setting is not recommended.

10-24. ENGINE OPERATING LIMITS. Listed in Table 10-3 are figures representing operating limits for block testing of overhauled engines.

10-25. OIL FLOW AND CONSUMPTION. The first 5 minutes of rated power operation under item 8 of paragraph 10-22 is to be used for stabilization of temperature. The next 20 minutes for oil consumption determination, and the last 5 minutes for oil flow determination.

10-26. When measuring oil flow, best accuracy will be obtained by timing the maximum predetermined quantity of oil which the capacity of the lubrication system will permit. The measurement of flow required for a 30 second period or the measurement of time required for a 100 pound flow is commonly used with satisfactory results.

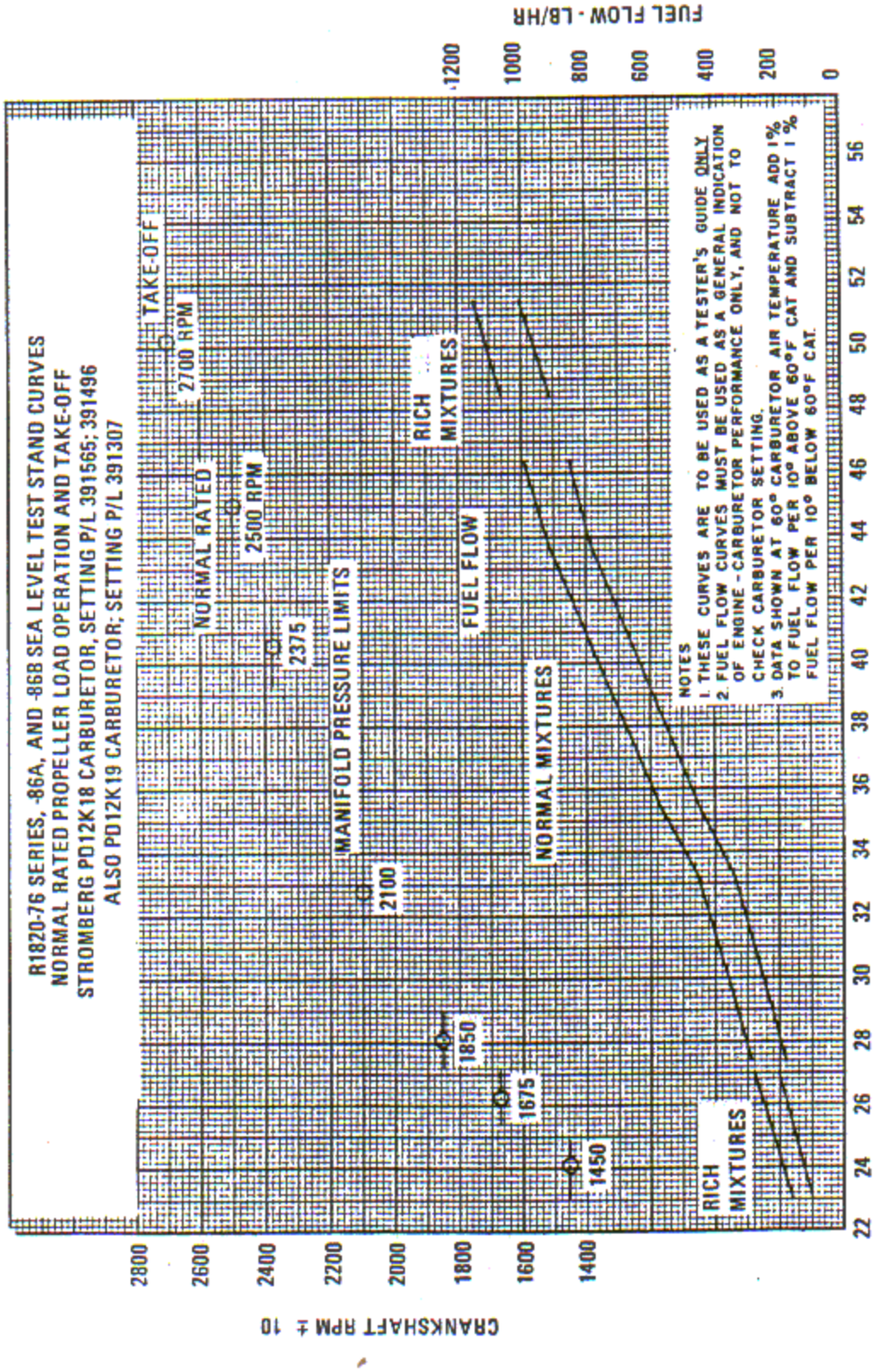

Figure 10-1. Test Stand Curve (R1820-76 Series, -86A, and -86B)

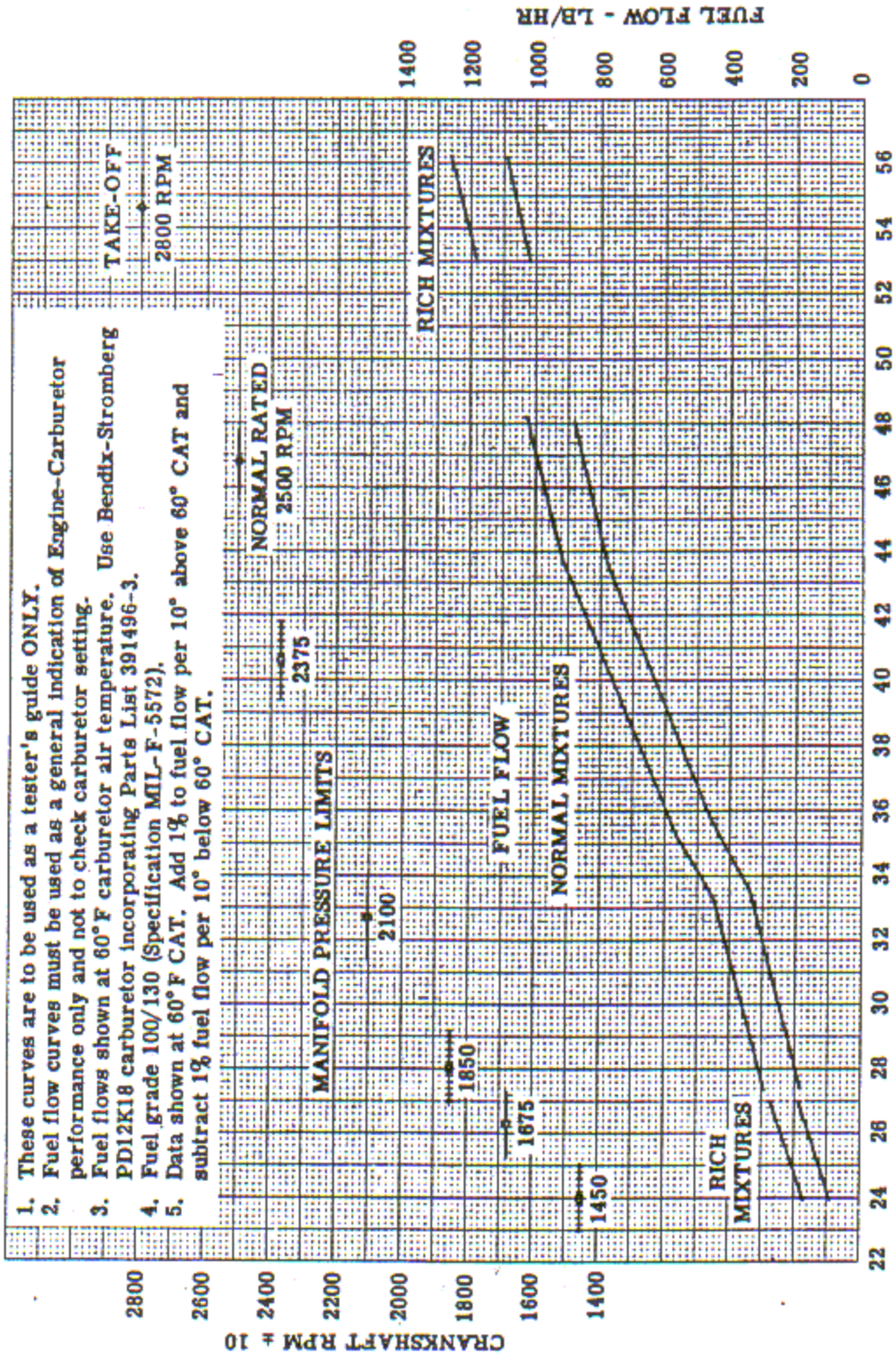

Figure 10-2. Test Stand Curve (R1820-80 Series)

TABLE 10-3

Engine Operating Limits for Block Test of Overhauled Engines

Oil Pressure Oil Pump (measured at rear cover)	Oil Pressure Propeller Supply (R1820-86A/B only)	Oil-In Temperature	Maximum Oil Consumption at Rated Power (lb per hr)	Maximum Cylinder Head Temperature at 2100-2500 RPM	Maximum Cylinder Head Temperature at 2500-2800 RPM	Corrected Oil Flow at Normal Rated RPM (lb per min)
**50 psi	*40 psi min at 1800 RPM	82-88°C (180-190° F)	14	246°C (475° F)	260°C (500° F)	125 lb/min
***65-75 psi 15 psi min at idle						

*This pressure measured at the governor pad pressure take-off.
**This pressure obtained at 1450 RPM.
***This pressure obtained at 1800 RPM.

NOTE

If test stand D-53747A is being utilized, the lower edge of the green stripe on the cup indicates 1.5 pounds of oil while the upper edge of the line indicates 3.5 pounds of oil.

10-27. CORRECTION OF OIL FLOW. Take oil flow readings at any given oil pressure within the operating limits and correct it to standard pressure and temperature conditions by use of the chart in figure 10-3.

10-28. In the following example the oil flow is shown corrected to a standard pressure of 70 psi.

Example	Observed Data
Oil Flow	100 lb. per minute
Oil Pressure	65 psi
Oil-In Temperature	82° C (180° F)

a. Enter the chart (figure 10-3) at point A (observed oil flow and observed oil pressure). Follow the diagonal line to point B (standard oil pressure 70 psi), then to point C (observed oil-in temperature).

b. Follow the slope from C to D standard oil-in temperature of 85° C (185° F). Read the corrected oil flow (106 lbs/min) on center scale.

10-29. CLUTCH SHIFT (R1820-76 SERIES, -86A, -86B). During the last 30 minutes of the 60 minute period of 2100 RPM, (item 5 of run-in schedule), paragraph 10-14, perform five complete supercharger clutch shifting cycles with the mixture control in the "Rich-Position". Reduce engine speed with the throttle to approximately 1600 RPM or 20.0 inches MAP and shift the clutch control valve to the high ratio position. Advance the throttle to 30 inches MAP and maintain the obtained RPM for not less than two minutes. Return the clutch control valve to the low ratio position and observe a decrease in manifold pressure. Continue to operate in low ratio for at least two minutes before starting the next clutch shifting cycles.

CAUTION

All clutch shifting must be done rapidly and firmly with no hesitation between the high and low ratio positions of the clutch control valve. The clutch control valve shall not be shifting from low to high unless engine speed is 1600 RPM or less at approximately 20 inches Hg MAP.

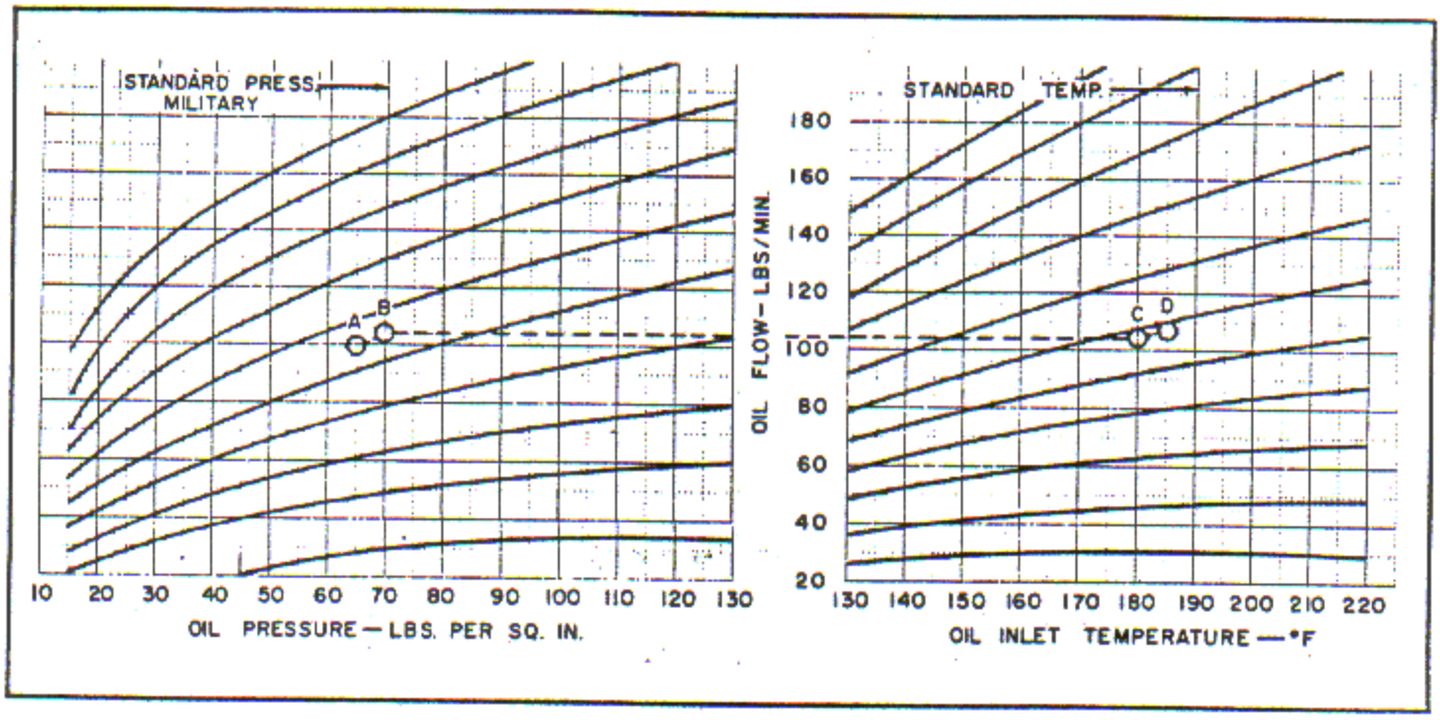

Figure 10-3. Oil Flow Correction Curve

NOTE

During operation in high blower, high clutch pressure should be within 20 psi of main oil pressure.

10-30. IDLE CHECK RUN.

a. Check the engine idle operation for excessive roughness and excessive smoking of individual cylinders.

b. Run the engine for an additional 10 minutes at 800 - 900 RPM to indicate any oil leaks into the induction system.

10-31. FULL THROTTLE CHECK RUN. Prior to starting the engine for the take-off power check run, record the local true barometric pressure reading and set the MAP and carburetor top deck pressure manometer scales to this reading. See figures 10-4 and 10-5.

NOTE

The carburetor air blower must be off at this time.

a. Upon completion of the take-off power and idle test points, set engine speed at 2000 RPM with the mixture in RICH position.

b. Close the carburetor air blower damper control until the carburetor top deck pressure manometer reads approximately 29.00 inches Hg.

CAUTION

During steps c and d, closely monitor the manifold pressure to ensure the limiting MAP is not exceeded. If it is noted that the limiting MAP will be obtained prior to take-off speed RPM, shut down the engine and reset the propeller to a lower pitch blade angle. Limiting MAP is shown on the correction curves.

NOTE

If the propeller blade angle is set extremely low, it is possible that the damper control may not have the capability to obtain full throttle prior to take-off speed RPM. When this situation is encountered, reset the propeller to a slightly higher blade angle.

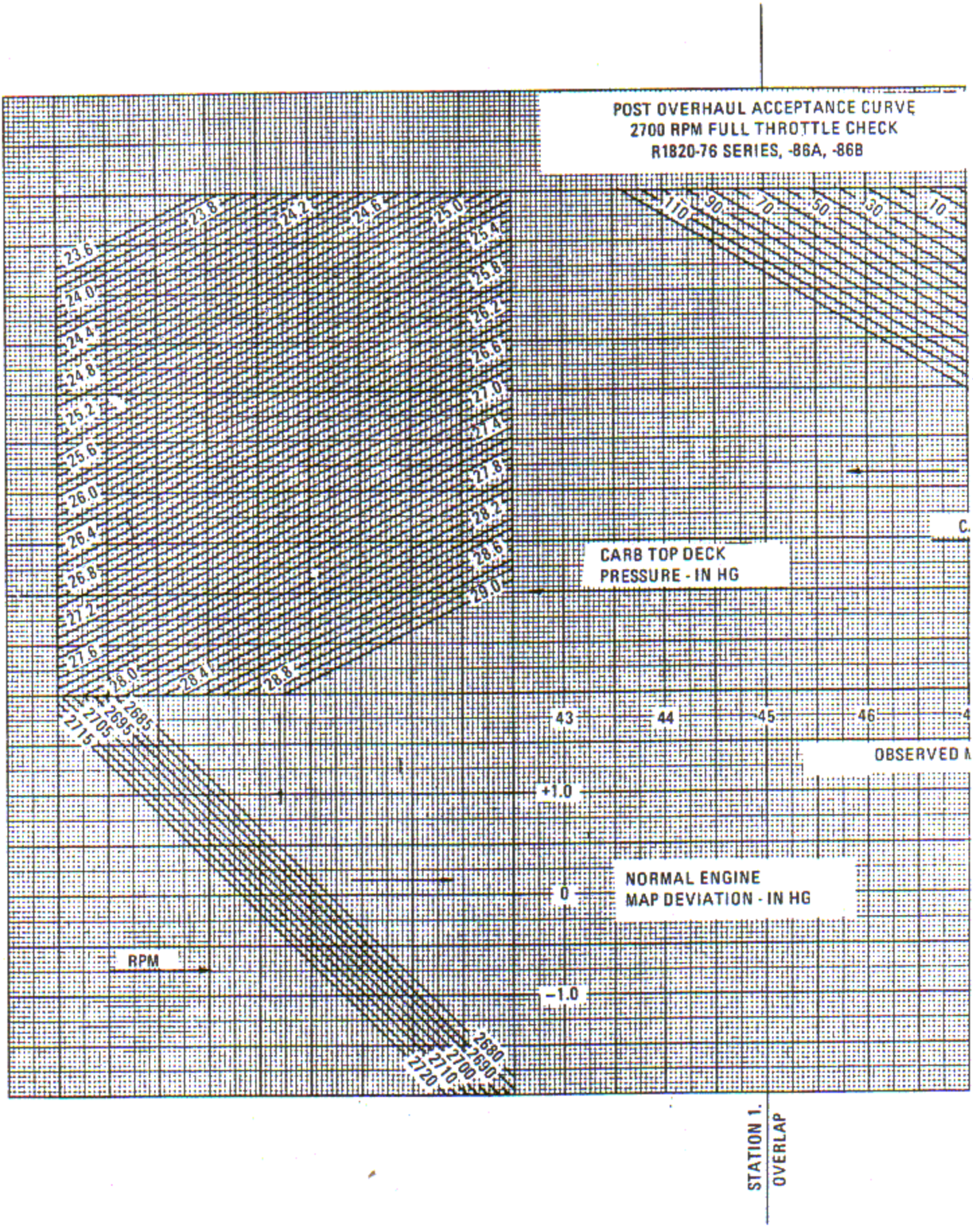

Figure 10-4. Post Overhaul Acceptance Curve (R1820-76 Series, -86A, -86B) (Sheet 1 of 2)

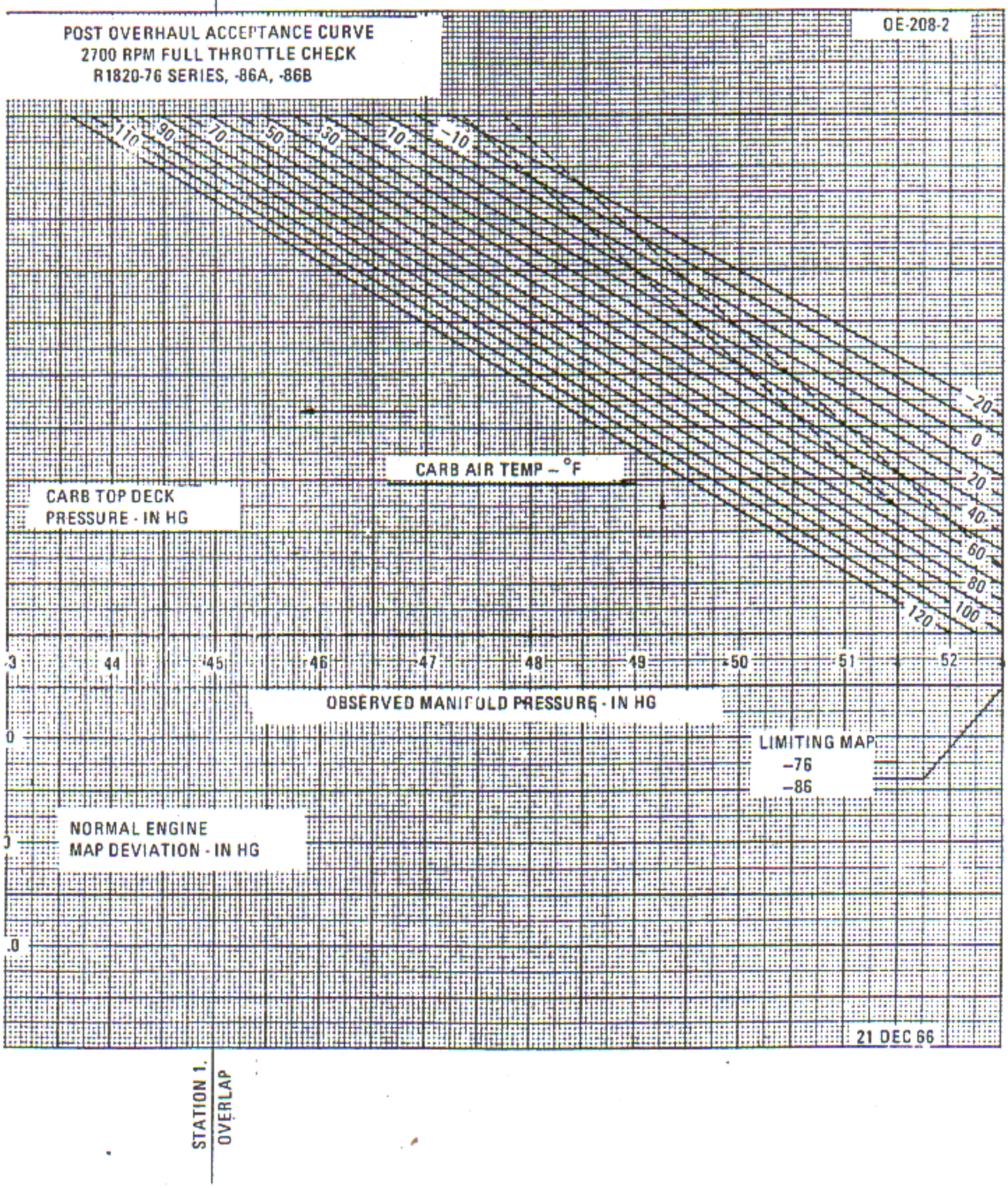

Figure 10-4. Post Overhaul Acceptance Curve (R1820-76 Series, -86A, -86B) (Sheet 2 of 2)

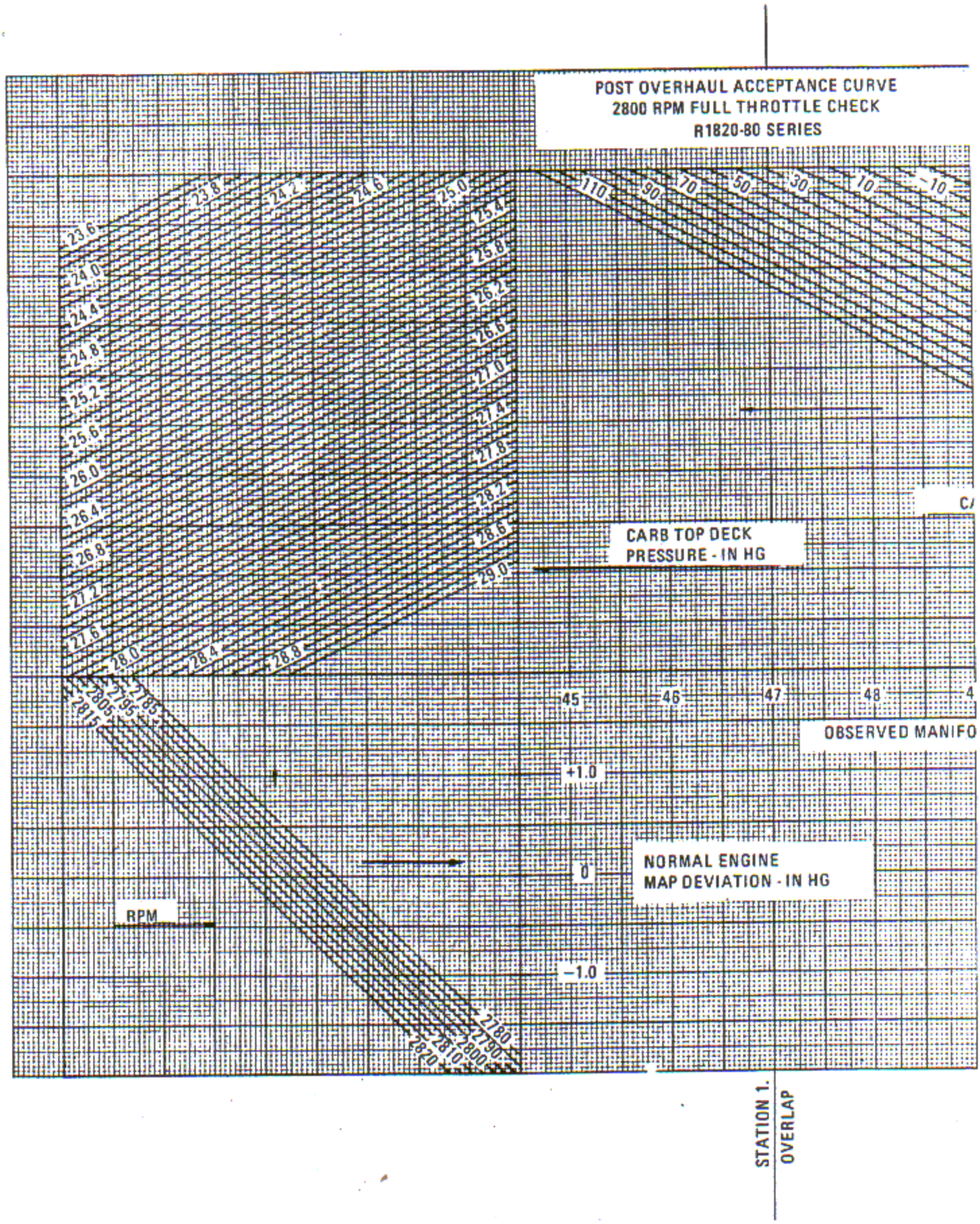

Figure 10-5. Post Overhaul Acceptance Curve (R1820-80 Series) (Sheet 1 of 2)

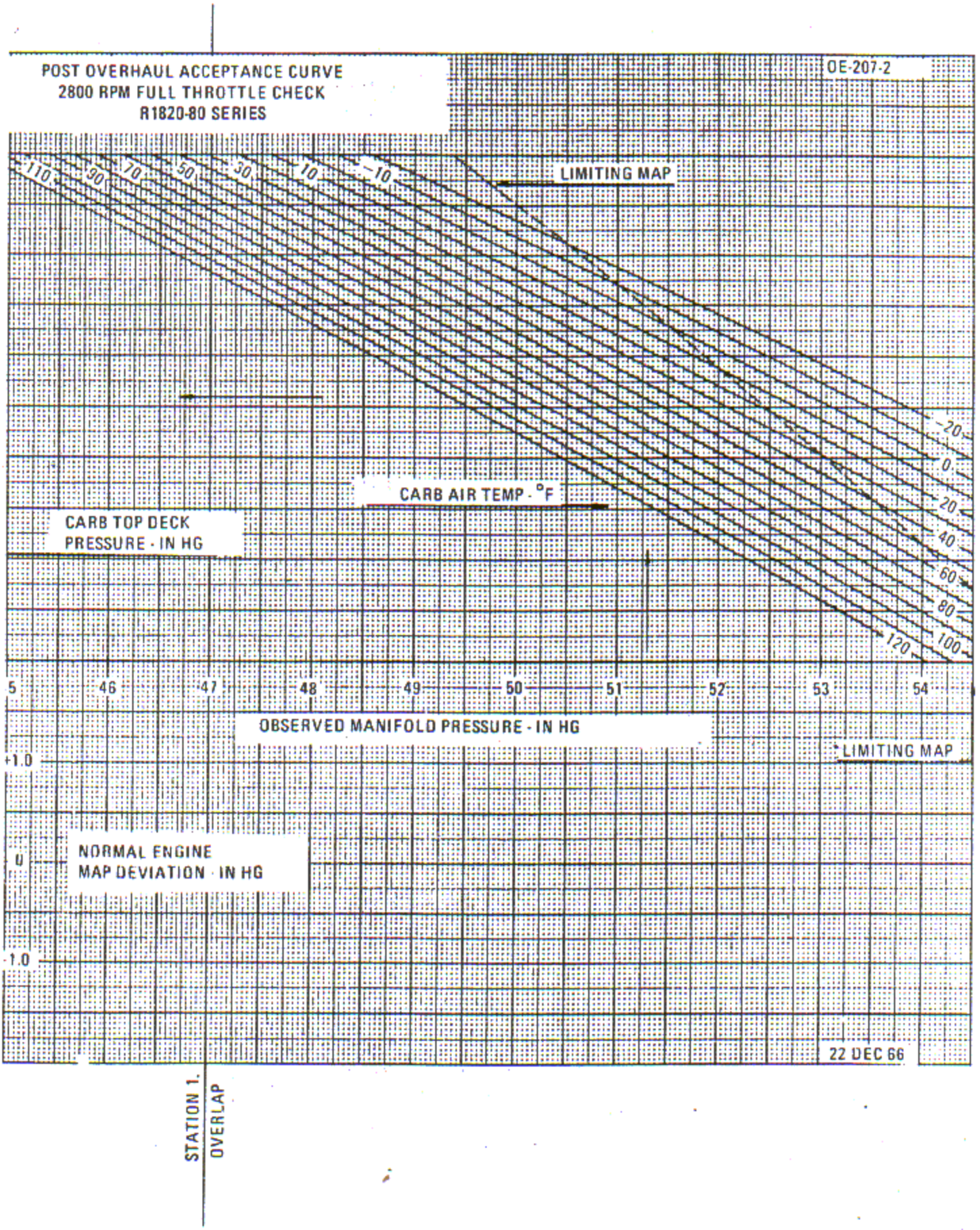

Figure 10-5. Post Overhaul Acceptance Curve (R1820-80 Series) (Sheet 2 of 2)

c. Open the throttle until either full throttle or take-off speed (2700 RPM for R1820-76/-86 models; 2800 RPM for R1820-80 models) is obtained. If RPM is reached prior to full throttle, decrease carburetor top deck pressure by further closing the damper control until full throttle can be obtained with less than take-off speed RPM.

d. With the engine at full throttle and less than take-off speed RPM, increase the carburetor top deck pressure by slowly opening the carburetor air damper until engine RPM increases to take-off speed RPM.

e. With the engine stabilized at full throttle take-off speed with less than limiting MAP, record the following.

RPM (to nearest 5 RPM)
MAP
Carburetor air temperature
Carburetor top deck pressure

f. Shut down the engine using normal engine stopping procedure.

g. Determine engine MAP deviation as follows: enter the correction curve, figure 10-4 or figure 10-5, at the observed manifold pressure and proceed vertically to the carburetor air temperature. Proceed horizontally to the left to the carburetor top deck pressure, then vertically down to the observed RPM. Finally, move horizontally to the right and read the MAP deviation from the normal engine. The engine is considered satisfactory provided the deviation from the chart is less than ± 1.0 inch Hg MAP.

10-32. RUN-OUT AND ASPIRATION.

a. After completing the overhaul test, operate the engine for 15 minutes at 1200 - 1500 RPM with an oil outlet temperature of 104 - 121°C (220 - 250°F). During this run the oil inlet line shall be supplied from an auxiliary line containing hot internal corrosion preventive mixture as specified in paragraph 12-2.

CAUTION

Do not spray any compound through the carburetor or cause any compound to come in contact with the air metering section of the carburetor.

b. Prior to shut-down, with engine operating at 1500 - 1600 RPM, spray corrosion preventive compound heated to 104 - 121°C (220 - 250°F), at the rate of approximately 30 gallons per hour into the induction system below the carburetor, but before the impeller, at any point that is most accessible.

c. When white smoke appears at all the exhaust outlets move the mixture control to the IDLE CUT-OFF position. Continue to spray the hot compound into the induction system until the engine comes to a complete stop. Then turn off the ignition.

d. After the engine has been stopped check for oil leaks. Remove the magnetic plugs and screen strainers from the oil sump and the rear supercharger housing and allow the oil to drain through a fine mesh screen. Inspect the plugs, the strainers and the oil-out strainers in the test stand lubrication system, for metallic chips and foreign material. Perform a cylinder compression test.

e. The integrity of all spark plug inserts shall be checked within 15 minutes of engine shutdown and prior to removal of spark plugs. While closely observing the insert, attempt to wiggle each spark plug. If any movement of the insert relative to the cylinder head is detected, the cylinder shall be replaced.

10-33. PENALTY TEST. If, during the test or after completing the test a condition arises which requires the disassembly or replacement of a major part, with the exception of cylinder and piston assemblies, the complete test schedule shall be re-run.

10-34. DISPOSITION OF ENGINE. After completion of the test block run, remove the engine from the test stand. Tighten and retorque the propeller shaft thrust bearing nut as instructed in paragraph 8-35, Section VIII. Process the engine through final check and preserve it in accordance with the applicable instructions in Section XII, paragraph 12-1.

10-35. CALIBRATING MODIFIED CURTISS ELECTRIC FLIGHT PROPELLERS.

10-36. CALIBRATION PROCEDURE.

a. Assemble and install the test club, to operate as an adjustable club, utilizing two of the four limit switches and having an operating range which extends from the low angle position to the feather position in accordance with the manufacturer's instructions.

b. The club may be operated for some period of time with this arrangement before precise setting of the limit switches is undertaken. This period is to provide an opportunity to gather information to accurately calibrate the test club. It will also provide the test engineers an opportunity to become familiar with the test club operation and with the response of the engine to changes in blade angle.

CAUTION

During the period when there is no rated power blade angle limit, it is possible with the throttle advanced, to increase the club angle to a point where the engine may be seriously over-loaded at a given RPM. For this reason, exercise extreme care to prevent the MAP from exceeding the limits set by the engine manufacturers for a given RPM. A decrease in club blade angle will cause an increase in RPM; therefore, exercise extreme caution to prevent the engine from exceeding the prescribed take-off RPM.

c. At the initial run-up of the engine propeller combination, set the test club at follow pitch and gradually increase the pitch until the specified MAP for a given RPM is reached.

d. To calibrate a test club which is to be used as a standard for checking horsepower output, data should be assembled not from one, but from a series of engines, in order to obtain a more accurate average. Calibrating a modified flight propeller consists of obtaining blade angles from a series of engines run under varying atmospheric conditions at normal rated RPM and MAP settings.

e. As the information is obtained from each engine run-in, the calculated air density (which is determined from the barometer and thermometer readings) is plotted on a graph against the club blade angle. Density increases with increased atmospheric pressure and/or lower temperature. The pattern of these points should indicate a consistency in data being obtained and the slope of the air density - blade angle curve. See figure 10-6.

f. When sufficient data has been obtained, draw a line through the average of these points. Select two points from this curve which will represent the extremes in atmospheric conditions in terms of air densities which exist at the particular locality of the overhaul base. Refer to the corresponding test club blade angles.

g. The limit switches on the test club can now be set to cut out automatically at the two selected blade angles.

10-37. READING BLADE ANGLES.

a. Use a bevel protractor to take all blade angle readings. Always take the blade angle reading from the same blade and from the same position on the thrust face of the blade, which must be in a horizontal position when a reading is taken.

b. Measure the angle at the 42 inch station and paint a carefully defined outline of the protractor on the blade so that the instrument may be replaced in the same position.

10-38. BLADE ANGLE SETTINGS. The procedure outlined above has described the method for setting two blade angles which will absorb normal rated horsepower of a particular engine model under conditions of high and low air densities. Test requirements may vary between different operators and for this reason a different arrangement of limit switches and switching circuits, as shown in figure 10-6 may be more desirable.

a. Setting two blade limits for one engine model and two blade limits for another model. Setting of two blade limits for normal rated power and setting two blade limits for take-off power; setting of high, intermediate and low blade limits for normal rated power where seasonal changes in atmospheric conditions are extremely severe.

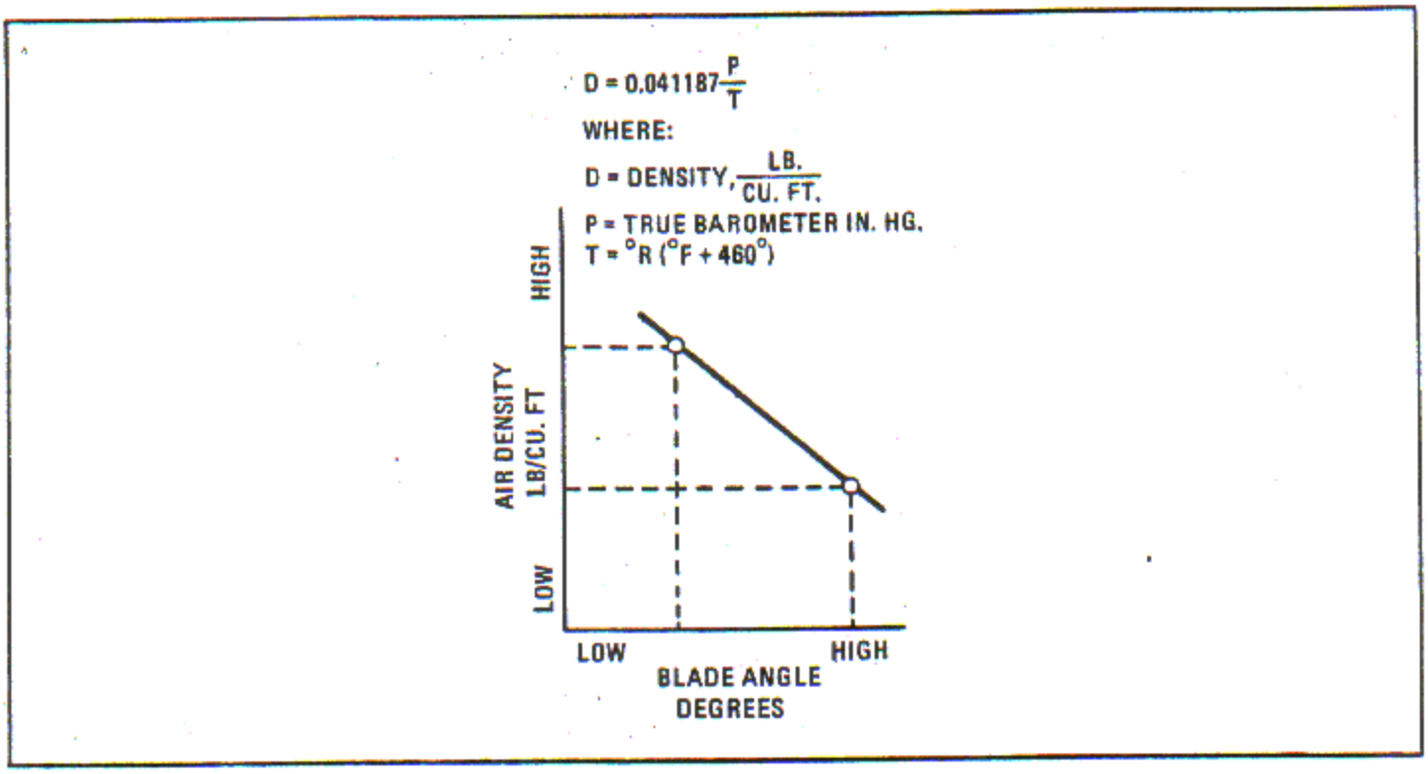

Figure 10-6. Air Density - Blade Angle Curve

b. Set all limit switches in accordance with the instructions from the propeller manufacturer.

10-39. Modified Curtiss-Electric Flight Propellers with the blades trimmed to the correct diameter and tip contour, and ready for test stand use may be obtained from The Test Club Co., Box 175, Caldwell, New Jersey. If a customer desires to modify a Curtiss-Electric Flight Propeller, consult the Curtiss-Wright Corporation, Curtiss Division, Caldwell, New Jersey or the applicable service instructions for the necessary blade trimming information.

10-40. CALIBRATING WOODEN TEST CLUBS. The blades of wooden test clubs as purchased from the manufacturer are cut only to the approximate dimensions which experience has shown will permit the engine to develop its sea level RPM without exceeding the maximum permissible MAP. However, since these clubs may be used by overhaul bases located at altitudes other than sea level, these approximate dimensions are large enough to permit trimming of the blades to a final size that will permit the particular engine model to be tested, to gain its rated speed at the rated MAP called for in the applicable test curve. The final diameter of the test club, therefore, must be arrived at by trial and error on the actual test stand where it will be used, and on a new engine or one known to have normal power output within normal tolerances for speed and MAP.

10-41. TRIMMING. When trimming wooden test clubs, the following general rules should be borne in mind: A one inch reduction in the diameter of the test club will result in an increased speed of approximately 50 RPM for the same MAP, where the atmospheric conditions closely check with those existing during the original trials of the larger diameter club. Determine if rated engine speed ± 10 RPM can be obtained within the limits of rated MAP as indicated by the test stand curves in figures 10-1 and 10-2.

10-42. The same test club may be used for a wide range of climatic conditions and under variable wind directions, referring to the applicable test stand curve, provided the test club is properly trimmed. During warm weather trim to obtain the

minimum tolerance on rated MAP, and during cold weather trim for minimum tolerance on rated speed and maximum tolerance on rated MAP.

NOTE

When trimming, balancing and finishing test clubs it is necessary to have a balancing rack complete with arbors, centering cones and lock nuts. This balancing rack must be installed perfectly level in a location free from vibration and drafts.

10-43. TRIMMING AND BALANCING PROCEDURES. Listed below are recommendations that may prove useful for the overhaul base when actually doing the work outlined above.

a. Place the propeller flat on a steady rest and draw a line on the front surface of a blade through the center of the blade width.

CAUTION

Do not use any sharp instrument to draw the line or cut into the fabric covering.

b. Measure along this line one-half of the desired club diameter reduction. Round off the corners properly through each of these points by scribing an arc whose radius is one half the width or cord of each blade.

c. Trim each blade and ensure that the cut of both the front and rear of the blade are square to the scribed arc. Use the proper saw to cut through the metal armor on the leading edge of the blade. Do not attempt to cut through any armor retaining screw.

NOTE

Should an armor retaining screw intersect the scribed arc, it is best to remove it. This is done by removing the solder filler on the head of the screw and backing the screw out.

d. After the blade tips have been trimmed, and the steel hub properly fastened to the test club hole, thoroughly clean the steel hub driving cone seats. Place the arbor and cones in position and lock them.

e. Set the propeller into position on the balancing stand with the arbor resting evenly on its knife edges or rollers. Arrive at perfect static balance by slowly rotating the test club several times to ensure that no friction is offered to the free movement of the arbors and rollers.

f. Place a pair of test clubs in a horizontal position and note which is heavier. Lighten the heavier blade using the wheel spoke shaper, ensuring that the radius of the blade is kept in its true form. Using the correct file at the point where the radius passes through the metal armor, blend the edges round. Set the opposite pair of blades in a horizontal position and repeat the process.

CAUTION

Do not chamfer the edges.

g. When both pairs of blades are in equilibrium, in a horizontal position, rotate the propeller several times. Adjust the propeller so that the center line of each blade forms a 45 degree angle with the horizontal plane through the center of the balancing arbor. If the blades are not in true static balance repeat the instructions in step f above for one pair of blades, and if necessary for the other pair of blades.

NOTE

During the performance of operations in steps f and g above, for each fractional amount of material removed from each tip, the test club should be moved through an arc of 45 degrees and back to the particular station involved.

h. Upon completion of steps f and g revolve the propeller and allow it to come to rest without any assistance. If the club is in true static balance any mass of blades will counterbalance the mass of the opposite blades. Therefore it is possible for any blade, when compared with its opposite or adjacent blade to vary as much as 0.250 inch.

10-44. FINISHING PROCEDURE.

a. Protect the finished tips of each blade against moisture by applying an even coat of varnish, Specification MIL-V-6894. Apply the varnish in such a manner so as not to disturb the true static balance.

NOTE

The use of extra coats of varnish to obtain static balance is not permissible as such corrections would not be permanent. The use of filters on the tips or blade surfaces to obtain static balance is not recommended.

b. Test clubs that run out of track due to a warped blade may seriously upset the balance. Do not use any club that has a blade off truck more than 0.125 inch.

c. Narrow chord, 45 degree, and four bladed wooden test clubs recommended for test procedures may be obtained from the Hartzell Propeller Co., Pequa, Ohio or Sensenich Propellers, Lancaster, Pa.

SECTION XI

TROUBLESHOOTING

11-1. Information to be furnished at a later date.

SECTION XII

PRESERVATION AND STORAGE

12-1. ENGINE PRESERVATION AND PACKING. Engines which are to remain idle for 48 hours or more shall be treated in accordance with the preservation procedures outlined in this section. These procedures are intended to accomplish the following basic functions under all normal conditions of engine handling.

a. To maintain an effective film of corrosion preventive compound over all metal surfaces susceptible to corrosion.

b. To protect the engines as effectively as possible against the entrance of atmospheric moisture.

12-2. In order to obtain optimum desiccant efficiency and prevent fuel and oil contamination of desiccant in shipping containers, the following precautions shall be strictly observed.

a. Utilize only pressure type metal plugs or caps, Specification MIL-F-5509 on engines being preserved.

b. Use appropriate O-rings in plugs used to seal standard screw thread openings.

c. Do not use plastic caps or closures unless specifically authorized.

d. Use appropriate gaskets to provide a positive seal on ALL metal covers used on fuel and oil flange or adapter pad openings.

e. Clean all exposed areas of the engine of all residual oils or greases. Leave a film of corrosion preventive on bare steel parts only after ensuring it will not drip or run.

f. Ensure that the desiccant is adequately secured and protected from possible oil or fuel contamination.

12-3. CORROSION PREVENTIVE COMPOUNDS AND MIXTURES. In all cases, corrosion preventive oil shall be used in accordance with the instructions contained in NAVAIR 15-01-500, Technical Manual for Preservation of Naval Aircraft for Shipment and Storage, and NAVAIR 15-02-500, Technical Manual of Preservation of Uninstalled Engines. These manuals also provide instructions for the preservation of engine accessories.

CAUTION

Aspirate and slush engines with corrosion preventive compound, MIL-C-6529, Type II. When packing room procedures have been completed, internally spray the cylinders with corrosion preventive compound, MIL-C-5545, at the specified temperatures. Do not rotate the crankshaft after the internal spray.

NOTE

It is recommended that corrosion preventive oil, MIL-C-5545, and MIL-C-6529, Type II, or dilutions thereof be restricted to ground operation only. All flight operations shall be confined to the use of engine lubricating oil, Specification MIL-L-6082, Grade 1100, or MIL-L-22851, Grade 1120. Refer to paragraph 10-1. Preservative hydraulic oil, Specification MIL-H-6083B, Type II, may be used to protect ferrous parts against corrosion as a temporary measure (up to 30 days in-process time).

12-4. PACKING ENGINE IN METAL CONTAINER. (See tool group 99).

a. Check the air pressure seals for proper sealing before removing the container cover.

b. Release air from container through the air valve.

c. Remove the closure bolts and lift the cover from the base using a suitable sling and hoist. Check the sealing gasket.

d. Attach the proper hoist eye to the propeller shaft and lift the engine from the stand using a suitable hoist.

e. Remove the three mounting plates from the container and attach them to the engine mount bosses with bolts, spacers, washers and nuts. Torque the nuts.

f. Lower the engine onto the base of the container, aligning the holes in the mounting plates with the holes in the plate in the base. Secure with at least six bolts, washers and nuts.

g. Remove the hoist eye from the propeller shaft. Install the propeller shaft protecting sleeve, the accessory clamp support spacer and the propeller shaft thread protecting cap.

h. Secure the accessories, including the carburetor, to the accessory mounting assembly.

NOTE

Insure that only new exhaust pipe clamp bolt nuts are included in the engine package. The only authorized exhaust pipe clamps are P/N 432195 or P/N 434126. Some unacceptable clamps are similar in appearance to the P/N 432195 clamp. To insure that the proper clamps are used, the clamp P/N must be checked.

i. Position the accessory mounting assembly over the front of the engine contacting three rocker box cowl mounting pads. Adjust the collar of the mounting assembly around the accessory clamp support spacer and tighten the adjusting bolts. Secure the mounting assembly to the cowl mounting pads with washers and nuts.

CAUTION

Ensure that the desiccant is adequately secured and away from all possible fuel or oil contamination. Do not remove the desiccant from its air-tight container until immediately prior to use.

j. Distribute the required amount of bagged dehydrating agent uniformly around the engine or place it in the container receptacle, if provided. Install a new humidity indicator in such a manner as to be visible through the inspection port provided.

k. Position the container cover on the base using locating pins as guides. Secure the cover to the base with bolts, lock washers and nuts. Torque to 550 - 600 inch-pounds.

CAUTION

Do not permit the gage pressure to exceed 7 psi. When the safety valve is operating correctly, it will maintain the desired container pressure of 4 - 6 psi. However, as a precaution, check and maintain the recommended gage pressure carefully.

l. Pressurize the container to 4 - 6 psi using clean dehydrated air.

m. After pressurizing, check the container for leaks using a soapy solution.

n. Coat the container flange bolts with corrosion preventive compound, Specification MIL-C-16173, Grade I.

o. Place the engine records in the receptacle provided and secure the cover.

p. If extended storage is anticipated, store the container to permit convenient inspection of the humidity indicator at the recommended intervals.

12-5. MATERIALS FOR PACKING AND STORAGE.

MATERIAL	SPECIFICATION
Container - Aircraft Engine Metal Reusable Shipping	MIL-C-5584, Type I
Compound - Corrosion Preventive	MIL-C-16173, Grade I
Compound - Corrosion Preventive	MIL-C-5545
Compound - Fingerprint Neutralizing	MIL-C-15074

MATERIAL	SPECIFICATION
Dehydrating Agent	MIL-D-3464 (cloth bags only)
Enamel - Quick Drying Camouflage	MIL-E-5556
Paper - Protective Crepe	JAN-B-121
Tape - Adhesive Moisture Resistant	JAN-B-127
Indicator - Relative Humidity	MIL-I-8835

12-6. PROCEDURES FOR HANDLING ENGINES IN SHIPPING CONTAINERS.

12-7. Store the engine in a manner which will permit convenient inspection of the humidity indicator card and a pressure check at periodic intervals not to exceed 30 days. In localities where the relative humidity is consistently above 65 per cent or where atmospheric conditions are highly corrosive, shorten the time interval between inspection periods as determined by local experience.

12-8. If the inspection reveals that the relative humidity is less than 30 per cent, and if the internal pressure is more than 1 psi, corrosion protection will be satisfactory until the next periodic inspection.

12-9. If the inspection reveals the internal pressure to be less than 1 psi and the relative humidity less than 30 per cent, repressurize the container to 4 - 6 psi using clean dehydrated air. Recheck the container pressure after seven days. If the pressure has not been maintained, remove the engine from the container and inspect it for serviceability. If the engine is in serviceable condition, place it in service or reinstall it in a serviceable container.

12-10. If the inspection reveals the humidity to be above 40 per cent, all the dessicant must be replaced. Release the container air pressure by operating the air valve and remove the group accessory receptacle.

CAUTION

Exercise care when operating the air valve. A too rapid release of air will cause a sudden change in pressure which may damage carburetor diaphragms.

12-11. Replace all bagged dehydrating agent with new material. Replace the humidity indicator card. Replace the receptacle and pressurize the container with clean dehydrated air to 4 - 6 psi.

NOTE

Do not permit the gage pressure to exceed 7 psi. When the safety valve is operating correctly, it will maintain the desired container pressure of 4 - 6 psi. However, as a safety precaution, check and maintain the recommended gage pressure carefully.

12-12. If the inspection indicates an internal relative humidity of 50 per cent an unsafe condition has been reached. Remove the engine from the container according to instructions in Section III, paragraph 3-4 and proceed as directed in the applicable section of NAVAIR 15-02-500.

ALPHABETICAL INDEX

	Paragraph Number
ACCESSORY DRIVES	
And Starter Shaft Assembly	7-39
And Starter Shaft Description	1-23
And Starter Shaft Disassembly	4-77
And Starter Shaft Inspection	6-169
And Starter Shaft Inspection for Twist	6-171
And Starter Shaft Oil Retaining Plug Reconditioning by Copper Plating	6-796
And Starter Shaft Reconditioning by Chrome Plating	6-795
And Starter Shaft Spline Wear	6-170
Gage Assembly Setting	6-174
Gear Disassembly	4-74
Gear Spline Wear Checking	6-173
General	6-146
Grind to Remove Pitting	6-664
Grinding	6-663A, 6-665
Internal Spline Checking	6-175
Locking Pin Holes Machining (Six)	6-381
Pins and Retaining Ring Installation	6-382
Reconditioning	6-663
Seal Ring and Retainer, Spherical Surface Lapping	6-669
Seal Ring, Lapping of Flat Side	6-668
Spherical Oil Seal and Retainer Lapping	6-667
Spline Chamfer and Breakedge Radius Increasing	6-666
ANTI-FRICTION BEARINGS	
Cage Clearance Inspection	6-61
Inner Race ID Measurement	6-63
Inspection	6-44, 6-57
Internal Radial Looseness (Free State)	6-62
Internal Radial Looseness (Residual)	6-64
New Bearing Inspection	6-58
Outer and Inner Races	6-220
Reconditioning of	6-219
Retainers	6-221
Rolling Elements	6-222
Used Bearing Inspections	6-59
Used Bearings, Visual Inspection	6-60
ARTICULATED RODS	
Alignment, Horizontal and Vertical	6-98
Assembly	7-20
Bores Shot Peening	6-394
Bushing Burnishing	6-396
Bushing Facing	6-398
Bushing, Grind to Accommodate Oversize	6-393
Bushing, Installation of New	6-395
Bushing, Lead-Tin Plate ID of	6-401
Bushing, Spinning	6-397
Description	1-14
Disassembly	4-36
Final Inspect	6-400
Bushing Finish Boring	6-399
Inspection	6-97, 6-392
Piston Pin and Knuckle Pin Bushings	6-99
BALANCEWEIGHT	
Drive Gear Bore Grinding (-80 Series)	6-304
Drive Gear Hole Regrinding	6-305
Hole Regrinding	6-306
CADMIUM PLATING	
General	6-878A
Plating Procedure (Solution No. 16)	6-880
Stripping Procedure	6-879
CAM	
And Balanceweights and Oil Sump Pump Drive Support, Balanceweight and Gear Retaining Bolt Holes, Oversize Reaming (-80 Series)	6-323
And Balanceweights and Oil Sump Pump Drive Support Bearing, Replacement (-80 Series)	6-310
And Balanceweights and Oil Sump Pump Drive Support Bushings, Removing and Installing (R1820-80, -80A)	6-319A
And Balanceweights and Oil Sump Pump Drive Support Trunnions, Grinding (-80 Series)	6-320

ALPHABETICAL INDEX (Cont)

	Paragraph Number
And Oil Sump Pump Drive Gear Support Ring Replacement	6-307
And Oil Sump Pump Drive Support Bushings Replacement (-76 Series, -86A, -86B)	6-313
And Second Order Balanceweight Assembly (-80 Series)	7-25
And Support Disassembly (-76 Series, -86A and -86B)	4-39
And Support Disassembly (-80 Series)	4-40
Assembly (-76 Series, -86A and -86B)	7-24
Assembly Alignment	8-6
Balanceweight and Gear Retaining Bolt Holes Reaming	6-324
Balanceweight Drive Gear Trunnions Reconditioning	6-321
Balanceweight Trunnions Reconditioning	6-322
Bearing Removal	6-311
Bushings, Finish Boring	6-319, 6-319G
Bushing Holes Reboring for Oversize	6-315, 6-319C
Bushings, Installation	6-318, 6-319F
Bushing Removal	6-314, 6-319B
Description	1-12
Drive Gear Support Bushing, Semi-Finish Boring	6-316, 6-319D
Inspection	6-75
Oil Sump Pump Drive Gear Bushings Flange Facing and Bore Semi-Finishing	6-317, 6-319E
Support Alignment Pin and Retaining Plate Removal	4-41
Support Assembly Plasma Spraying	6-822
Support Assembly Reconditioning by Plating	6-821
Support Bearing, Installation of New	6-312
Support Ring, Installation of New	6-309
Support Ring Removal	6-308
Timing Check	8-9
Tracks, Vapor Blasting Procedure	6-325

	Paragraph Number
CARBURETOR	
Air Inlet Screen Alignment	6-624
Air Inlet Screen Reconditioning	6-622
Description	1-35
Grommet, Removal of Broken	6-623
Grommet Screen and Wire Intersections Soldering	6-625
Installation	8-32
Removal	4-6
Setting	10-21
CHECK VALVE	
Description	1-42
CHROME PICKLE TREATMENT	
Determining Nitric Acid Content of Chrome Pickle Solution	6-903
Determining Sodium Dichromate Content of Chrome Pickle Solution	6-902
General	6-899A
Procedure	6-900
Sodium Hydroxide	6-905
Sodium Thiosulfate (0.1N) Standard	6-904
Solution	6-901
Starch Solution	6-906
CHROMIUM PLATING	
(Aluminum) Zincate Treatment	6-869
General	6-865A
Plating Procedure (Nitrided or Carburized Surface)	6-868
Plating Procedure (Steel and Stainless Steel)	6-867
Stripping Procedure (Steel, Copper and Aluminum)	6-866
CLEANING	
Alkaline Method	5-18
Aluminum Oxide (Dry Blast)	5-28
Application, Table 5-1	5-64
Bearings	5-33
Carbon Removers	5-19
Cleaning Table 5-1	5-62
Cold Soak Method	5-21
Corrosion Preventive	5-66

ALPHABETICAL INDEX (Cont)

	Paragraph Number
Crankshaft Rear End, Oil Passage Cleaning	5-38
Cylinders	5-39
Cylinder Barrel	5-41
Cylinder Barrel, Measuring Contaminants in	5-43
Cylinder Head	5-40
Degreasing	5-12
External Precleaning	5-9
General	5-1
Heavy Sludge Removal	5-11
Hot Soak Method	5-22
Ignition Harness	5-42
Intake and Exhaust Valves	5-46
Internal Passages	5-36
Internal Precleaning	5-10
Magnesium or Aluminum Parts	5-48
Oil Strainer	5-49, 5-51
Petroleum Solvents	5-15
Pistons	5-47
Precleaning	5-8
Pressure Flushing	5-61
Push Rod Assembly	5-60
Rinse After Carbon Soak	5-23
Roller and Ball Bearings	5-35
Sand Blasting	5-27
Self-Locking Nuts	5-59
Silver, Bronze, or Leaded Bearing Surfaces	5-34
Soft Grit Blasting	5-31
Solvent Spray Booth	5-16
Solvent Washing Tank	5-17
Spark Plug Insert Threads	5-44
Specialized Cleaning	5-65
Trichlorethylene (Vapor) Method	5-14
Tumblast	5-30
Vacu-Blasting	5-32
Valve Springs and Washers	5-45
Vapor Blast (Liquid Hone)	5-29

CLUTCH CAM

Assembly to Cage Clearance	6-672
Bushing, Facing	6-705
Bushing Installations	6-704
Bushing Replacement (Low Speed) (-76 Series, -86A and -86B)	6-702
Bushing Removal	6-703

COPPER PLATING

Acid Plating (Steel, More Than 0.30 Percent Carbon)	6-883
Aluminum	6-887
Stripping Procedure	6-882
General	6-881A
High Speed Plating Procedure (Bronze)	6-886
High Speed Plating Procedure (Stainless Steel)	6-885
High Speed Plating Procedure (Steel)	6-884

COUNTERWEIGHTS

Bearings, Rear Crankshaft Finish Reaming (-76A, -76B and -80)	6-358
Bearings, Rear Crankshaft Finish Reaming (-76C, -76D, -80A, -80B, -86A and -86B)	6-371
Bushings, Front and Rear Removal (-76A, -76B and -80)	6-348
Bushings, Front and Rear Removal (-76C, -76D, -80A, -80B, -86A and -86B)	6-360
Bushing Holes, Front and Rear Grinding (-76A, -76B and -80)	6-349
Bushing Holes, Front and Rear Grinding (-76C, -76D, -80A, -80B, -86A and -86B)	6-361
Bushings Installation in One Side of Front and Rear (-76A, -76B and -80)	6-350
Bushings Installation in One Side of Front and Rear (-76C, -76D, -80A, -80B, -86A and -86B)	6-362
Bushing Installation on Opposite Side of Front and Rear (-76A, -76B and -80)	6-351
Bushing Installation on Opposite Side of Front and Rear (-76C, -76D, -80A, -80B, -86A and -86B)	6-363
Front and Rear; Bushings, Front Crankshaft Counterweight Bushings and Rear Crankshaft Counterweight Bearings, Replacement (-76A, -76B and -80)	6-347

ALPHABETICAL INDEX (Cont)

	Paragraph Number
Front and Rear; Bushings, Front Crankshaft Counterweight Bushings and Rear Crankshaft Counterweight Bearings Replacement (-76C, -76D, -80A, -80B, -86A and -86B)	6-359
Front Bushing Removal (-76A, -76B and -80)	6-352
Front Bushing Removal (-76C, -76D, -80A, -80B, -86A and -86B)	6-364
Front Crankshaft Bushing Holes, Grinding (-76A, -76B and -80)	6-354
Front Crankshaft Bushing Holes, Grinding (-76C, -76D, -80A, -80B, -86A and -86B)	6-367
Front Crankshaft, Bushings Installation (-76A, -76B and -80)	6-356
Front Crankshaft, Bushings Installation (-76C, -76D, -80A, -80B, -86A and -86B)	6-369
Rear Bearings Removal (-76A, -76B and -80)	6-353
Rear Bearings Removal (-76C, -76D, -80A, -80B, -86A and -86B)	6-365
Rear Crankshaft Bearing Holes Polishing (-76A, -76B and -80)	6-355
Rear Crankshaft Bearing Holes Polishing (-76C, -76D, -80A, -80B, -86A and -86B)	6-368
Rear Crankshaft Bearing, Inspection and Marking	6-366
Rear Crankshaft Bearings, Installation (-76A, -76B and -80)	6-357
Rear Crankshaft Bearings, Installation (-76C, -76D, -80A, -80B, -86A and -86B)	6-370
CRANKCASE FRONT MAIN SECTION	
Disassembly (-76 Series, -86A and -86B)	4-37
Disassembly (-80 Series)	4-38
Removal	4-29
CRANKCASE FRONT SECTION	
Assemble Hydro Oil Tube Assembly	6-247
Attaching Bolt Hole Repair	6-227
Complete Assembly (-76 Series, -86A and -86B)	7-12
Complete Assembly (-80 Series)	7-13
Description	1-9
Disassembly (-76 Series, -86A and -86B)	4-44
Disassembly (-80 Series)	4-45
Flange Reconditioning by Chrome Plating	6-784
Hydro Oil Tube Assembly, Decreasing Length of	6-246
Inspection	6-65
Installation	8-10
Machine (Crankcase Not Previously Reworked)	6-245
Machine for Oversize Pipe Threaded Adapter	6-244
Oil Seal Ring Seating Surface Repair	6-229A
Oil Transfer Dowel, Oil Seal Ring, Seating Surface Repair	6-229
Removal	4-27
Rework to Prevent Cracking	6-225
Stationary Reduction Gear Seating Surface	6-236
To Crankcase Main Section Bolt Hole Spotfaces	6-228
Wye Type Hydro Connector (-86A and -86B)	6-243
CRANKCASE MAIN SECTION	
Assembly	7-26
Copper Plated Crankcases	6-78
Cylinder Decks	6-76
Cylinder Decks Copper Plating	6-812
Cylinder Deck Grinding	6-326, 6-328
Cylinder Deck Grinding Preparation	6-327
Cylinder Decks Non Copper Plated	6-77
Cylinder Hold-Down Capscrew Hole Threads Inspection	6-79
Cylinder Hold-Down Capscrew Hole Threads Reconditioning	6-329
Description	1-13
Drill, Ream and Chamfer Defective Hole	6-330
Front Main Bearing Retainer Ring Reconditioning by Chrome Plating	6-356

ALPHABETICAL INDEX (Cont)

	Paragraph Number
Front Main Section Installation	8-5
Heli-Coil Insert Installation	6-332
Heli-Coil Insert Hole Tapping	6-331
Rear Bearing Liner Installation	6-336
Rear Bearing Liner Splined Lock Installation	6-338
Rear Main Bearing Liner Replacement	6-333
Rear Section Bearing Liner Grinding	6-337
Rear Main Bearing Oversize Liner Grinding to Fit	6-335
Rear Section Bearing Surfaces Inspection and Grinding to Suit Oversize Liner	6-334
Rear Main Section Disassembly	4-43
Rear Main Section Removal	4-31
Reconditioning by Chrome Plating	6-790
CRANKSHAFT	
And Master Rod Assembly Installation	8-4
Assembly Removal	4-30
Bonderize	6-804
Complete Assembly	7-21
Counterweight Bushings Inspection	6-84
Counterweights, Reconditioning By Copper Plating	6-797
Counterweight Pins Inspection	6-86
Crankcheek Clamp Screw Salvage By Copper Plating	6-810
Crankpin Clamping Surface Copper Plating	6-811
Crankpin Front Thrust Face Grinding	6-345
Crankpin Front Thrust Face Undercut Grinding	6-346
Crankpin, Grind and Lap for Undersize Master Rod Bearing	6-341
Crankpin Grinding and Lapping	6-343
Crankpin Limits	6-82
Crankpin, Reconditioning of	6-340A
Crankpin and Thrust Face Inspection	6-344
Description	1-14
End Play Check	8-8
Front and Rear Bronze Plating	6-802
Front and Rear End, Plating and Nitriding	6-798
Front and Rear Main Bearing Thrust Face Reconditioning Limits	6-85
Front and Rear Main Bearing Salvage By Copper Plating	6-819
Front and Rear Nitriding	6-806
Front End Assembly	7-19
Front End Disassembly	4-34
Front End Extension	6-83
Front End Extension Journals Grinding	6-339
Identification	6-799
Inspect, Rear	6-374
Inspection	6-81
Insulate and Bronze Plate Stripping	6-803
Insulate Counterbore Area	6-805
Insulation Stripping Bronze Plating	6-807
Machine Chamfer Angle	6-342
Main Bearing Journals Chromium Plating	6-808
Rear, Non Functional Oil Hole Plugging	6-379
Rear End Assembly	7-18
Rear End Crankpin Bore Front Thrust Face Grinding	6-372
Rear End Disassembly	4-35
Rear End Inspection	6-45
Rear End Radii Reconditioning	6-800
Rear End Removal	4-33
Rear End, Removal of Nitride Case Cracks at Clamp Bolt Area	6-373
Rear End Salvage When Accessory Drive and Starter Shaft Coupling Splines Are Worn	6-376
Rear Main Bearing Installation	7-22
Reassembly of Nitrided	6-809
Recondition	6-375
Reconditioning by Chrome Plating	6-786
Remove ID Splines and Cut Retaining Ring Groove in Rear	6-378
Salvage Limits of, When Chrome Plating	6-787

ALPHABETICAL INDEX (Cont)

	Paragraph Number
Exhaust Valve Seat and Guide Replacement	6-473
Exhaust Valve Seat End Guide Removal	6-475
Exhaust Valve Seat Recess and Guide Boss Hole Checking for Squareness and Concentricity Relationship	6-478
Exhaust Valve Seat Recess Boring, Valve Guide Boss Bottom Chamfering	6-477
Fillet Radii Reforming and Grit Blasting	6-457
Fins, Machining	6-454
Fin Profiling Limits	6-451
Fluorescent Inspection	6-110
Gage Inspection	6-425
Guide Machining, Prior to Installation	6-479, 6-492
Inspection	6-108
Inspection (Non-Timed) Thread	6-424
Intake Valve Guide and Seat Installation	6-470
Intake Valve Guide Boss Hole Boring	6-468
Intake Valve Guide Removal	6-465
Intake Valve Guide Stem Hole Reaming and Seat Grinding	6-471
Intake Valve Seat and Guide Replacement	6-464
Intake Valve Seat Recess and Cylinder Guide Hole Checking for Squareness and Concentricity	6-469
Intake Valve Seat Removal	6-466
Intake Valve Seat Recess Boring	6-467
New Adapter Installation	6-439
Reassembly	6-426
Reconditioning	6-423
Replacement (Timed)	6-421
Spacer Hole Remachining	6-456
Spark Plug Boss Area, Salvage Rework for Cracks	6-443
Spark Plug Inserts	6-111
Target Hole Location; Salvage Rework for Cracks	6-200
Thermocouple (Bayonet Type) Hole Adapter, Replacement	6-438
Valve Guide Boss, Back Spot-facing and Chamfering Bottom of	6-491
Valve Seat and Reamed Hole Checking for Concentricity	6-472
Vertical Fins Baffle Attaching Bolt Spaces Solid Boss Salvage	6-453
Weld Repair of Damaged	6-452
Weld to Form Solid Boss	6-455
DEFLECTORS	
Cylinder Air Deflector Clamps	6-145
Inspections	6-144
DIFFUSER PLATE	
Blend and Polish Welded Vanes	6-653
Description	1-22
Fabricate Steel Ring and Machine Diffuser	6-660
Installation	7-35
Installation on Supercharger Rear Housing	6-661
Pilot OD Machining	6-659
Preparation Prior to Reconditioning	6-574
Reconditioning Procedures	6-575
Reconditioning Vanes by Welding	6-652
Removal	4-67
Supercharger Rear Housing Machining	6-658
Supercharger Rear Section Re-conditioning to Obtain Tight Fit	6-656
Vane Grooves Repair	6-654
Vane Removal Limits	6-651
Vane Salvage and Reconditioning	6-650
DRAIN VALVE EXTENSION TUBE	
Clip Retainer Screw Hole Drilling and Tapping	6-631

ALPHABETICAL INDEX (Cont)

	Paragraph Number
Remove Excess Metal from End of Tube	6-630
Replacement	6-626
Tap for New Tube	6-628
Tube Expanding	6-629
Tube Removal	6-627
DUAL ACCESSORY DRIVE	
Assembly	7-48, 7-65
Bushing Holes Boring in Existing Housing and Cover for Oversize Bushings	6-768
Bushings Installation in Existing Housing and Cover	6-769
Bushings Removal from Existing Housing and Cover	6-767
Description	1-33
Disassembly	4-69
Finish Bore all Bushings and Turn Flange Outside Diameter of Bushing A	6-771
Finish Face Flanges of Bushings B, C, D, E, F, G and H	6-770
Gear Assembly	7-43
Gear Reconditioning by Chrome Plating	6-793
Housing and Cover Bushings Replacement	6-766
Housing Machining Assemblies, Repair of	6-765
Housing Removal	4-55
Michelle Idler Gear Bushing Flange Face	6-772
ELECTROLESS NICKEL PLATING AND NICKEL SULFAMATE PLATING	
General	6-870A
Nickel Stripping Procedure (Steel Only)	6-875
Nickel Sulfamate Plating Procedure (Alkaline Bath)	6-872
Procedure (Stainless Steel)	6-877
Procedure (Steel)	6-873
Procedure (Steel, More Than 0.30 Percent Carbon)	6-876
Stripping Procedure (Aluminum)	6-871
ENGINE	
Accessory Mounting Assembly Removal	3-5
Identification of Components Prior to Disassembly	3-9
Installation in Disassembly Stand	3-7
Preparing for Disassembly	3-8
Preservation and Packing	12-1
Removal from Shipping Container	3-6
Shipping Container Cover Removal	3-4
Shipping Container Description	3-3
Pre-Oiling	10-11
Starting	10-16
EPOXIDE PHENOLIC RESIN COATING ENGINE PARTS	
Application	6-913
General	6-907
Preparation of Parts	6-910
Steel Parts	6-912
Steel Parts with Aluminum or Lead-Tin Plated Details	6-911
Stripping Using Blast Method	6-909
Stripping Using Chemical Solution	6-908
EXHAUST PIPE	
Connection	6-114
Connection Clamp Assembly Inspection	6-115
Connector, Rework of	6-542A
Connector or Sleeve Installation	6-543
Connector or Sleeve OD Machining	6-542
Connector or Sleeve Removal	6-539
Connector or Sleeve Port Machining	6-540
Connector or Sleeve, Replacement	6-538
Finish Drill Broken Stud	6-546
Flange to Cylinder Exhaust Port Attaching Stud Replacement (-76 Series)	6-544
New Stud Installation	6-550
Pilot Drill Broken Stud	6-545
Remove Bent or Damaged Stud	6-548
Remove Broken Stud	6-547

ALPHABETICAL INDEX (Cont)

	Paragraph Number
Retap for New Stud	6-549
EXTERNAL HYDRO-OIL TUBE	
Description	1-44
Front Tube Installation	8-13
Front Tube Removal	4-17
Rear Tube Installation	8-28
Rear Tube Removal	4-9
FINAL TEST	
Blade Angle Settings	10-38
Calibrating Modified Curtiss Electric Flight Propellers	10-35
Calibrating Wooden Test Clubs	10-40
Calibration Procedure	10-36
Clutch Shift (-76 Series, -86A and -86B)	10-29
Correction of Oil Flow	10-27
Disposition of Engine	10-34
Engine Operating Limits	10-24
Finishing Procedure	10-44
Fuel Consumption	10-20
Full Throttle Check Run	10-31
General	10-1
Idle Check Run	10-30
Oil Flow and Consumption	10-25
Penalty Test	10-33
Reading Blade Angles	10-37
Run-In After Major Overhaul	10-22
Run-In Following Minor Parts Replacement	10-2
Run-Out and Aspiration	10-32
Test Clubs	10-8
Test Equipment	10-3
Test Procedure	10-10
Test Stand Lubrication System	10-4
Thermocouples	10-7
Trimming	10-41
Trimming and Balancing Procedures	10-43
FRONT OIL SUMP AND PUMP	
Assembly	7-71
Description	1-32
Disassembly	4-49
Installation	8-17
Removal	4-25
FUEL PUMP DRIVE	
Description	1-33
Bushings, Finish Bore and Face	6-717
Bushing Lock Pins, Installation	6-716
Flanged Bushing Installation	6-714
Gear Assembly	7-43
Gear Support	6-179A
General	6-717B
Locating Recess Repair, Drive Gear Support Assembly	6-717A
Plain Bushing Installation	6-715
Shaft Bushings Removal	6-713
Shaft Support Assembly	7-47
Shaft Support Bushing Replacement	6-712
Shaft Support Disassembly	4-70
Shaft Support Removal	4-62
Support Installation	7-60
GENERATOR DRIVE	
Gear Inspection	6-177
Gear Reconditioning By Chrome Plating	6-792
GOVERNOR AND CAM INTERMEDIATE DRIVE GEAR	
Assembly	7-21
Disassembly	4-25
GOVERNOR DRIVE GEAR	
Assembly (-76 Series)	7-11
Disassembly	4-48
Shaft Bushing, Face and Chamfer	6-257
Shaft Bushing Finish Ream	6-256
Shaft Bushing Installation	6-254
Shaft Bushing Removal	6-253
Shaft Bushing Replacement	6-252
Shaft Counterbore Bushing	6-255
HEADLESS SCREW BUSHINGS	
Bushing Installation (New)	6-204
Bushing Removal	6-202
Installation	9-10
Miscellaneous Replacement	6-201

ALPHABETICAL INDEX (Cont)

	Paragraph Number
Retap Inside Diameter of Bushing	6-205
Retap for New Bushing	6-203
HEXAGON HEAD SCREW BUSHINGS	
Bushing Installation (New)	6-217
Hexagon Head Bushing Removal	6-215
Installation	9-10
Replacement	6-214
Retap Inside Diameter	6-218
Retap for New Bushing	6-216
IGNITION SYSTEM	
Cable Assembly Installation	8-20
Cable Assembly Removal	4-19
Description	1-30
Manifold Installation	7-72
IMPELLER	
Balancing	6-614
Clutch Cam Inspection	6-153
Description	1-21
Dimensions	6-608
Inducer Assembly Dimensional Limits	6-613
Inducer Inspection	6-155
Inducer Mating Surface Reconditioning	6-612
Inspection	6-157, 6-610
Inspection After Foreign Object Damage	6-159
Inspection and Rework of Inducer and Blades	6-611
Installation	7-39
Intermediate Drive Gear Shaft and Pinion Cage Assembly (-76 Series, -86A and -86B)	7-40
Intermediate Drive Gear Shaft and Pinion Cage Disassembly (-76 Series, -86A and -86B)	4-76
Low Speed Drive Clutch Cam Assembly	6-162
Nicks or Dents	6-606
Reconditioning and Static Balancing	6-604
Removal	4-66
Repair	6-607
Side Clearance	7-36
Silver Plate	6-826
To Diffuser Plate Forward Clearance	7-37
IMPELLER DRIVE	
Accessory Drive and Starter Shaft Installation (-76 Series, -86A and -86B)	7-52
Accessory Drive and Starter Shaft Installation (-80 Series)	7-53
Accessory Drive and Starter Shaft Removal and Disassembly (-80 Series)	4-65
Accessory Drive and Starter Shaft Removal (-76 Series, -86A and -86B)	4-64
Bushing Bore, Lead-Tin Plate	6-693
Bushing, Boring Out	6-684
Bushing Face Lapping	6-698
Bushing Face Polishing	6-692
Bushing, Finish Bore	6-691, 6-697
Bushing, Finish Bore in Support	6-677
Bushing, Finish Ream in Housing	6-681
Bushings Installation	6-696
Bushing Installation (New)	6-690
Bushing, Lead-Tin Plating	6-699
Bushing (New) and Oversize Lock Pin Installation in Support	6-676
Bushing Reaming	6-687
Bushing Removal	6-689, 6-695
Clutch Control Valve (-76 Series, -86A and -86B)	1-24
Clutch Housing Machining	6-673
Clutch Rollers	6-163
Description (-80 Series)	1-25
Gear Bushing Replacement (-76 Series, -86A and -86B)	6-688
Gear Shaft Front Bushing Removal of Bottom	6-683
Housing, Bore for 0.010 Inch Oversize Bushing	6-685
Housing Front Bushing Installation	6-680, 6-686
Multi-plate Clutch Adapter (-76 Series, -86A and -86B)	6-151

ALPHABETICAL INDEX (Cont)

	Paragraph Number
Multi-plate Clutch Adapter Repair (-76 Series, -86A and -86B)	6-706
Multi-plate Clutch Inspection (-76 Series, -86A and -86B)	6-152
Multi-plate Clutch Plate Reconditioning (-76 Series, -86A and -86B)	6-708
Multi-plate Clutch Sleeve Inspection	6-154
Multi-plate Clutch Sleeve Rework	6-312
Pinion Gear Bushing Rework	6-710
Pinion Journal Reconditioning (-76 Series, -86A and -86B)	6-700
Pinion Journal Reconditioning Procedure	6-701
Rear Bushing Removal from Support	6-675
Roller Clutch Cage	6-164
Two Speed Sprag Clutch Assembly (-86A and -86B)	7-54
Two Speed Sprag Clutch Disassembly (-86A and -86B)	4-71
IMPELLER SHAFT	
Bearing Support Inspection	6-150
Bearing Support Replacement	6-580
Bushing Replacement	6-597
Description	1-21
Front and Rear Bushings Replacement (-80 Series)	6-674
Front and Rear Oil Seal Sleeves Groove Grinding for Oversize Widths	6-595
Front Bushing Finish Boring	6-602
Front Bushing Installation	6-600
Front Bushing Removal	6-598
Front Bushings Replacement (-76 Series, -86A and -86B)	6-682
Gear Bushing Replacement (-76 Series, -86A and -86B)	6-694
Installation	7-39
Oil Seal Front Sleeve Inspection	6-160
Oil Seal Sleeves Regrooving	6-596
Rear Bushing Finish Boring	6-603
Rear Bushing Installation	6-601
Rear Bushing Removal	6-599
Segmented Oil Seal Rings, Assembly	7-38
Sleeve and Support Reconditioning by Chrome Plating	6-791
Sleeve Replacement, Honing, and Oil Seal Ring Fitting	6-580
Splines Flash Tin Plating	6-824
Spline Silver Plating	6-825
Support Installation	7-68
Support Pressure Test	7-69, 7-70
INDUCER	
Inspection	6-158
INDUCTION SYSTEM	
Description	1-37
INSPECTION	
Applying Magnetic Substance	6-31
Cleaning Parts After Demagnetization	6-35
Control of Suspension	6-36
Demagnetization After Magnetic Particle Inspection	6-33
Dye Penetrant Inspection	6-56
Engraving (When Using Engraving Machine)	6-15
Electrochemical Etching	6-14
Fluorescent Penetrant Inspection (Zyglo)	6-53A
Hardened Steel Parts	6-24
Inspection of Engine Subjected to Overspeed	6-23
Magnetic Field Indicator Check for Residual Magnetism After Demagnetizing	6-34
Magnetic Particle	6-26
Magnetizing Parts	6-30
Marking Engine Parts for Identification Purposes	6-9
Nital Etch Inspection of Hardened Steel Parts for Grinding Damage (Burns)	6-25
Oils	6-8
Part Inspection	6-32
Parts Requiring Penetrant Inspection	6-52
Parts that May Be Magnetic Particle Inspected	6-37
Penetrant Inspection	6-48

ALPHABETICAL INDEX (Cont)

	Paragraph Number
Post Emulsification Fluorescent Penetrant Inspection (Pentrex)	6-54
Post Emulsification Fluorescent Penetrant Inspection (Super-Pentrex)	6-55
Preparation of Parts for	6-29
Preparation of Parts for Penetrant Inspection	6-51
Resin Coated Internal Engine Parts	6-46
Restricted Markings	6-13
Rubber Stamping With Acid	6-11
Rubber Stamping With Ink or Dye	6-12
Scribing (Hand)	6-18
Special Cases of Magnetic Particle Inspection	6-40
Steel Stamp Peening	6-17
Types of Inspection	6-19
Types of Penetrant Inspection	6-53
Unrestricted Markings	6-10
Vibro Engraving	6-16
Visual Inspection	6-20
INTAKE PIPE	
Description	1-20
Drain Boss Detail Weld to	6-535
Drain Boss Hole Drilling and Tapping	6-536
Drain Boss Salvage (Cylinders No. 4 and No. 6)	6-534
Installation	8-25
Removal	4-13
To Cylinder Attaching Flange Bolt Holes, Heli-Coil Insert Inspection	6-113
INTERCYLINDER AIR DEFLECTOR	
Installation	8-14
Removal	4-16
KNUCKLE PINS	
Bushings and Rods Inspection	6-390
Bushing Removal	6-391
Bushing Replacement	6-389
Grinding	6-387
Lock Plate Copper Plating	6-813
Regrind Oversize	6-388
Splined Locking Plate	6-100
LEAD PLATING	
General	6-888A
-Nickel Plate Stripping Procedure	6-889
Procedure (Stainless Steel)	6-891
Procedure (Steel)	6-890
-Tin Plate	6-862
-Tin Plate Stripping Procedure (Solution No. 5)	6-863
-Tin Plating Procedure (Solution No. 22)	6-864
LUBRIZING STEEL PARTS	
General	6-915A
Equipment	6-918
Procedure	6-917
Stripping Procedure	6-916
MAGNETIC CHIP DETECTOR PLUG	
Inspection	6-189
Reconditioning	6-777
MAGNETIC DRAIN PLUG	
Installation	7-61
Removal	4-60
MAGNETO	
Check	10-23
Description	1-26
Drive Gear Assembly	7-42
Drive Shaft Reconditioning by Chrome Plating	6-794
Installation	8-29
Removal	4-8
MASTER ROD	
Anti-Propeller (Spacer) Hub Journal and End Face Reconditioning	6-408
Assembly	7-20
Bearing Bore Inspection	6-91
Bearing Bore, Oversize Honing	6-402
Bearing Erosion Limits	6-92
Bearing Lead-Tin Plating	6-827
Bearing Out-of-Round Limits	6-93
Bushing Burnishing	6-396
Bushing Facing	6-398
Bushing, Finish Boring	6-399
Bushing, Lead-Tin Plate ID of	6-401
Bushing Spinning	6-397

ALPHABETICAL INDEX (Cont)

	Paragraph Number
Chrome Plate Hub Diameter (Locking Plate Side)	6-405
Complete Assembly	7-21
Final Inspection	6-400
Grind Hub Diameter (Spacer Side)	6-407
Grind Hub Diameter to Finish Size (Locking Plate Side)	6-406
Grind to Accommodate Oversize Bushings	6-393
Horizontal Alignment	6-89
Hub Outside Diameter Reconditioning	6-403
Inspection	6-88, 6-392
Knuckle Pin Holes	6-95
Knuckle Pin Holes Grinding	6-384
Knuckle Pin Holes Grinding, Peening and Honing	6-383
Knuckle Pin Holes Honing	6-386
New Bushing Installation	6-395
Nicks and Dents	6-88A
Oil Seal Disc, Rework (-76C, -76D, -80 Series, -86A and -86B)	6-410
Outside Diameter Grinding (Prior to Plating)	6-404
Piston Pin Bushing	6-94
Reconditioning	6-409
Shot Peening	6-385
Shot Peen Bores	6-394
Spacer Inspection	6-96
Vertical Alignment	6-90
MISCELLANEOUS	
Corrosion Preventive Compounds and Mixtures	12-3
Cotter Pins	7-8
Cutting Oil and Coolants	6-197
Functional Tool List	2-4
Gaskets	7-3
Limits Charts	9-14
Locking Pin Holes, Alignment	9-5
Lockwiring	7-5
Lockwiring, Special Applications	7-6
Lubrication System Description	1-38
Materials for Packing and Storage	12-5
Numerical Tool Index	2-5
Oil and Fuel Grades	10-15
Packing Engine In Metal Containers	12-4
Pre-Lubrication	9-2
Procedures for Handling Engines in Shipping Containers	12-6
Table of Limits	7-4, 9-13
Table of Tightening Torque Values	9-6
Tab Washers	7-7
Taper Pipe Thread Plug Installation	9-11
Test Stand Curves	10-19
Test Warm-Up	10-18
Torquing Instructions	9-3
Torque Wrench Extensions	9-4
Torque Wrench Instructions	9-1
Welding of Engine Parts	6-223
OIL PUMP	
Assembly (-76 Series)	7-49
Assembly, Increased Capacity (-80 Series, -86A and -86B)	7-50
Check Valve	6-183
Description	1-33
Disassembly	4-68
Inlet Line	10-12
Installation	7-64
OIL SEAL VENT TUBE	
Chrome Plate or Fabricate New Vent Tube	6-636
Inspect and Ream Diaphragm Bore	6-634
Inspect and Rechase 9M/M 1.25M/M Thread	6-635
Installation	6-637
Pressure Test	6-638
Removal	6-633
Replacement	6-632
OIL SCAVENGE STRAINER	
Cleaning	5-57
Disassembly	5-56
Increased Capacity	5-55
Reassembly	5-58
OIL STRAINER	
Assembly	5-54

ALPHABETICAL INDEX (Cont)

	Paragraph Number
Brent Chemical Cleaners	5-52
By-Pass Valve	6-188, 6-774
Cleaning	5-51
Cover Lugs	6-776
Disassembly	5-50
Housings, Repair of	6-775
Inspection of Oil-In	6-186
Installation	7-59
Removal	4-61
Turco Chemical Cleaners	5-53
OIL SUMP	
Additional Clean-Out Plugs, Incorporation	6-639
Bushing Assembly	6-642
Deburr and Wash	6-646
Drill Lockwire Hole	6-645
Drill Stake Pin Hole and Install Pin	6-643
External Oil Tube Installation	8-27
External Oil Tube Removal	4-10
Machine and Tap Hole Near Top of Sump at Intersection of Arms	6-641
Machining Assembly Strainer Sleeve Boss, Repair of	6-648
Mill Rim of Bushing	6-644
Plug Assembly	6-647
OIL SUMP SCAVENGE PUMP DRIVE SHAFT	
Bushing Flange - Finish Bore and Face	6-251
Bushing - Installation	6-250
Bushing - Removal	6-249
Gear Bushing - Removal and Installation	6-248
PISTONS	
And Cylinder Installation	8-12
And Rings Assembly	7-29
Clean and Inspect Ring Grooves	6-557
Clean for Fluorescent Penetrant Inspection	6-118
Description	1-16
Disassembly	4-51
Fluorescent Penetrant Inspect	6-119
Inspect for Pitting Due to Corrosion	6-121
Inspect for Wear and General Condition	6-120
Inspection	6-116
Oil Check Valve Leakage and Operation Test	6-87
Pin and Plug Assembly	7-32
Ring Installation	7-31
Ring Side Clearance	7-30
Reconditioning Ring Grooves	6-558
Removal	4-26
Reuse of	6-117
Wedge-Type Ring Grooves After Reconditioning, Inspection of	6-559
Wedge-Type Piston Ring Grooves Reconditioning	6-556
PISTON PINS	
Bushing Replacement	6-389
Inside Diameter Reconditioning	6-411
Bushings and Rods Inspection	6-390
Inspection	6-41
Plug Inspection	6-122
Bushing Removal	6-391
Salvage By Copper Plating the Piston Pin Plugs	6-818
PLATING	
AMS Reference Numbers for Plating	6-845
Anodes	6-835
Baking	6-838
Baths	6-386
Cleaning	6-830
Electrical Sources	6-842
General	6-829
Information	6-828
Inspection	6-839
Insulating	6-833
Insulating Material	6-834
Racking	6-831
Reconditioning Worn Engine Parts	6-778
Reconditioning Worn Engine Parts by Plasma Spray	6-914
Rinsing Operation	6-844
Shop Layout	6-840
Stripping	6-832
Tanks	6-841

ALPHABETICAL INDEX (Cont)

	Paragraph Number
Ventilation and Safety	6-843
PRE-OIL CHECK VALVE	
Inspection and Repair (-76 Series, -80 Series, -86A and -86B)	6-184
Pilot Diameter of Outlet Port	6-187
Pressure Test (-76 Series, -80 Series, -86A, and -86B)	6-185
PRESSURE OIL STRAINER	
Description	1-43
General	10-13
Procedure	10-14
PRESSURE RELIEF VALVE	
Description	1-41
PRIMING SYSTEM	
Installation	8-31
Removal	4-7
PROPELLER SHAFT	
And Reduction Gearing Description (-76 Series, -86A and -86B)	1-10
And Reduction Gearing Description (-80 Series)	1-11
And Reduction Gear Inspection	6-67
Assembly (-76 Series, -86A and -86B)	7-9
Assembly (-80 Series)	7-10
Bushings Replacement (-76 Series, -86A and -86B)	6-258
Bushings Replacement (-80 Series)	6-271
Disassembly (-76 Series, -86A and -86B)	4-46
Disassembly (-80 Series)	4-47
Front and Rear Bushings and All Pinion Bushings Finish Boring (-76 Series, -86A and -86B)	6-269
Front and Rear Bushings Finish Boring (-80 Series)	6-278
Front and Rear Bushings Removal (-80 Series)	6-272
Front Bushing Removal (-76 Series, -86A and -86B)	6-262
Hydraulic Leakage Test	7-15
Hydro-Oil Connection Nut and Adapter Removal	4-4
Hydro-Oil Connection Nut Torquing	8-33
Hydro-Oil Connection Substituting Cover and Nut	7-16
Pilot Journals Grinding and Polishing	6-340
Pinion Bushing Installation (-76 Series, -86A, -86B)	6-266
Pinion Bushing Lock Pin Installation (-76 Series, -86A and -86B)	6-268
Pinion Bushing Lock Pin Removal (-76 Series, -86A and -86B)	6-260
Rear Bushing and Pinion Bushings (-76 Series, -86A and -86B)	6-261
Rear Bushing, Boring Taper in (-76 Series, -86A and -86B)	6-270
Rear Bushing Boring Taper in (-80 Series)	6-279
Rear Bushing, Drill New Lock Pin Holes and Install New Lock Pin (-80 Series)	6-277
Rear Bushing Installation (-76 Series, -86A and -86B)	6-265
Rear Bushing Installation (-80 Series)	6-275
Rear Bushings Lock Pin Installation (-76 Series, -86A and -86B)	6-267
Rear Bushing Lock Pin Removal (-76 Series, -86A and -86B)	6-259
Reconditioning By Chrome Plating	6-783
Sleeve and Front and Rear Bushings Inspection	6-68
Sleeve and Front Bushing Installation (-76 Series, -86A and -86B)	6-264
Sleeve and Front Bushing Installation (-80 Series)	6-274
Sleeve Removal (-76 Series, -86A and -86B)	6-263
Sleeve Removal (-80 Series)	6-273
Sleeve Rework	6-280
Spacer Seating Surface Inspection	6-69

ALPHABETICAL INDEX (Cont)

	Paragraph Number
PROPELLER SHAFT THRUST BEARING	
Bore and Counterbore Crankcase for Oversize Retainer	6-233
Dowel Pin Removal	6-232
Grind Bore and Inner Flange Faces of Retainer	6-235
Nut, Examination and Rework of	8-34
Nut Inspection	6-70
Nut Removal	4-3
Nut Torquing	8-35
Retainer and Dowel Pin Installation	6-234
Retainer Removal	6-231
Retainer Replacement	6-230
Spacers, Recondition	6-281
PUSH ROD	
Connection - Removal and Installation	6-441
Housing and Adapter Installation	8-16
Housing and Adapter Removal	4-22
Housing Inspection	6-143
Housing Outer Connection Replacement	6-440
Inspection	6-143
Installation	8-18
REAR OIL PUMP	
Description	1-40
Disassembly	4-68
Drive Gear Spring	1-47
Increased Capacity, Scavenge Strainer	5-55
Inspection	6-181
Mating Surfaces Inspection	6-182
Mating Surface Repair	6-773
Removal	4-54
REDUCTION DRIVE GEAR	
Installation	8-7
Removal	4-28
REDUCTION GEAR	
Check Concentricity of Ground Hole With Pitch Diameter	6-299
Pinion Bore Grinding (-80 Series)	6-297
Pinion Carrier Trunnion - Grinding (-80 Series)	6-300
Pinion Carrier Trunnion Thrust and End Face Reconditioning (-80 Series)	6-302
Pinion Bore Regrinding	6-298
Trunnions Regrinding	6-301
Trunnion Thrust and End Faces Grinding	6-303
ROCKER ARM	
Assemblies	6-123, 7-28
Assembly Rework	6-519
Bearing Inspection	6-130
Bushing Burnishing	6-524
Bushings Installation	6-507, 6-523
Bushing Removal	6-506, 6-522
Bushing Removal from Bolt Head Side	6-510
Bushing Removal from Nut End Side	6-511
Bushing Replacement (-80 Series, -86A and -86B)	6-521
Bushing Replacement - Intake and Exhaust Valve	6-505
Disassembly	4-52
Face Bushing Flange (Bolt Head Side)	6-516
Face Bushing Flange (Nut End Side)	6-517
Face Ends of Bushing	6-526
Finish Bore, Bushing ID	6-508
Fork Repair Procedure	6-531
Hand Line Ream Bushing Holes	6-515
Hub Bolt Bushing Counterboring	6-518
Hub Bolt Bushings Inspection	6-128
Hub Bolt Bushing Replacement	6-509
Hub Bolt Inspection	6-129
Hub Face Wear Inspections	6-127
Inspection	6-126
Installation	8-18
New Bushing Installation in Head Bolt Side	6-513
New Bushing Installation in Nut End Side	6-514
New Pin Installation	6-530
Old Pin Removal	6-529
Push Rod Removal	4-21
Ream Cylinder for Oversize Bushing	6-512

ALPHABETICAL INDEX (Cont)

	Paragraph Number
Reconditioning	6-520
Rocker Box Interference	6-125
Roller Pin Replacement	6-528
Sever and Finish Bore Bushings	6-527
Spacer Reconditioning	6-532
Spin Ends of Bushing	6-525
Thrust Washer Reconditioning	6-533
Side Clearance Check	6-124
ROCKER BOX	
Cover Inspection	6-122A
Covers Installation (-76 Series)	8-22
Cover Installation (-80 Series, -86A and -86B)	8-23
Cover - Intercylinder Deflector Attaching Hole, Rework	6-503
Cover Mating Surface Reconditioning	6-504
Cover Removal	4-20
Inspection	6-126
ROLLER CLUTCH	
Assembly Inspection (-76 Series, -86A and -86B)	6-161
Disassembly (-76 Series, -86A and -86B)	4-75
Retaining and Generator Drive Gear Inspection	6-165
SCAVENGE SYSTEM	
Description	1-45
Pump Drive Shaft Spline Wear	6-176
SILASTIC BRACES	
Cure Fin	6-463
Cylinder Barrel Fin and Head Fin Replacement	6-459
Cylinder Barrel Fin Installation	6-461
Cylinder Head Fin Installation	6-462
Removal	6-460
SILVER PLATING	
Bond Testing By Shot-Peening of Copper Strike Parts	6-860
Copper Strike Bake Procedure	6-854
Copper Strike (Solution No. 10)	6-852
Discoloration or Scale	6-856
General	6-847
Nickel Strike Bake Procedure	6-855
Nickel Strike (Solution No. 12)	6-853
Nickel Strip (Solution No. 7)	6-850
Plating	6-846
Procedure (Aluminum) Zincate Treatment	6-858
Procedure (Bronze)	6-859
Procedure (Solution No. 26)	6-851
Procedure (Stainless Steel)	6-857
Shot-Peening Procedure	6-861
Silver Strip (Solution No. 4)	6-849
Stripping Procedures	6-848
SOLUTION ANALYSIS PROCEDURES	
Analysis No. 1 (Copper Strike)	6-965
Caustic Soda	6-968
Copper Metal	6-966
Free Sodium Cyanide	6-967
Sodium Carbonate	6-969
Analysis No. 2 (Nickel Strike)	6-970
Boric Acid	6-973
Nickel Chloride	6-972
Nickel Metal	6-971
Analysis No. 3 (Nickel Strike, Wood's)	6-974
Muriatic Acid	6-976
Nickel Chloride	6-975
Analysis No. 4 (Silver Strike and Silver Plate)	6-977
Potassium Carbonate	6-980
Potassium Cyanide (Free)	6-979
Silver Cyanide	6-978
Analysis No. 5 (Cadmium Plate)	6-981
Cadmium Metal	6-982
Cyanide	6-983
Sodium Carbonate	6-984
Analysis No. 6 (Chromium Plate)	6-985
Chromic Acid	6-986
Sulfates	6-987
Analysis No. 7 (Copper Plate, Acid)	6-988

ALPHABETICAL INDEX (Cont)

	Paragraph Number
Copper Sulfate	6-989
Analysis No. 8 (Copper Plate, Rocheltex)	6-990
Copper Metal	6-991
Free Potassium Cyanide	6-992
Potassium Carbonate	6-993
Potassium Hydroxide	6-994
Rocheltex	6-995
Analysis No. 9 (Copper Plate, High Speed)	6-996
Copper Metal	6-997
Free Sodium Cyanide	6-998
Potassium Hydroxide	6-1000
Sodium Carbonate	6-999
Analysis No. 10 (Lead Plate)	6-1001
Determining Lead Plating Time	6-1007
Determining Plating Rate	6-1005
Determining Weight of Lead To Be Plated	6-1006
Free Fluoboric Acid	6-1004
Lead	6-1003
Lead Fluoborate Concentration	6-1002
Analysis No. 11 (Lead-Tin)	6-1008
Determining Lead-Tin Plating Time	6-1015
Determining Plate Rate	6-1013
Determining Tin in Lead-Tin Plate	6-1016
Determining Weight of Lead-Tin to be Plated	6-1014
Free Fluoboric Acid	6-1012
Lead	6-1009
Stannous Tin	6-1011
Tin	6-1010
Analysis No. 12 (Nickel Sulfamate Plate)	6-1017
Boric Acid	6-1019
Nickel	6-1018
Analysis No. 13 (Sulfuric Acid 50 Percent)	6-1020
Analysis No. 14 (Hydrochloric Acid, Muriatic Acid)	6-1021
SOLUTIONS AND MIXING PROCEDURES	6-919
Additions	6-962
Soluble Oil	6-963
Solution No. 1 (Cadmium Strip)	6-920
Solution No. 2 (Chromium Strip, Steel Parts)	6-921
Solution No. 3 (Chromium Strip, Copper Alloy Parts)	6-922
Solution No. 4 (Silver Strip, Steel Parts)	6-923
Solution No. 5 (Lead-Tin, Lead-Indium and Lead Strip)	6-924
Solution No. 6 (Lead-Tin Strip Enthone)	6-925
Solution No. 7 (Nickel Strip, Enthone)	6-926
Solution No. 8 (Nickel Strip, Nitric Acid)	6-927
Solution No. 9 (Tin Stripping)	6-928
Solution No. 10 (Copper Strike)	6-929
Solution No. 11 (Copper Strike)	6-930
Solution No. 12 (Nickel Strike)	6-931
Solution No. 13 (Wood's Nickel Strike)	6-932
Solution No. 14 (Silver Strike)	6-933
Solution No. 15 (Zinc Immersion)	6-934
Solution No. 16 (Cadmium Plate)	6-935
Solution No. 17 (Chromium Plate)	6-936
Solution No. 18 (Copper Plate, Acid)	6-937
Solution No. 19 (Copper Plate, Rocheltex)	6-938
Solution No. 20 (Copper Plate, High Speed)	6-939
Solution No. 21 (Lead Plate)	6-940
Solution No. 22 (Lead-Tin Plate)	6-941
Solution No. 23 (Electroless Nickel, Acid, Cahill Bath)	6-942
Solution No. 24 (Electroless Nickel Plate, Alkaline Bath)	6-943
Solution No. 25 (Nickel Sulfamate Plate)	6-944
Solution No. 26 (Silver Plate)	6-945
Solution No. 27 (Tin Plate)	6-946
Solution No. 28 (Chromic Acid Dip)	6-947
Solution No. 29 (Fluoboric Acid)	6-948
Solution No. 30 (Muriatic Acid 17 Percent)	6-949

ALPHABETICAL INDEX (Cont)

	Paragraph Number
Solution No. 31 (Nitric-Hydrofluoric Acid Etch)	6-950
Solution No. 32 (Nitric-Hydrofluoric Acid Etch)	6-951
Solution No. 33 (Persulfate Etch)	6-952
Solution No. 34 (Sulfuric Acid 50 Percent Anodic Etch)	6-953
Solution No. 35 (PM 90 Inhibited Acid)	6-954
Solution No. 36 (Anodic Alkaline Cleaner)	6-955
Solution No. 37 (Cathodic Cleaner)	6-956
Solution No. 38 (Soap Cleaner)	6-957
Solution No. 39 (Sodium Cyanide)	6-958
Solution No. 40 (Copper Strip, Steel Parts)	6-959
Solution No. 41 (Chromium Strip, Aluminum Parts)	6-960
Solution No. 42 (Lubrize)	6-961
SPARK PLUG	
Back - Spotface Insert	6-433
Drill Holes and Install Two New Lock Pins	6-434
Front Removal	4-18
Ignition Lead Installation	8-30
Insert Replacement	6-428
Install New Insert	6-432
Level and Secure Cylinder In Fixture	6-428A
Pressure Test Cylinder Assembly	6-437
Rear Installation	8-24
Rear Removal	4-14
Redress Insert Cylinder Hole Chamfer	6-431
Remove Insert	6-429
Spotface and Countersink Insert Flange	6-435
Tap Insert Hole	6-436
Tap Insert Hole in Cylinder Head	6-430
STANDARD SOLUTIONS AND INDICATORS	
Ammonium Chloride (1.0 Percent)	6-1041
Barium Chloride Solution (20 Percent)	6-1031
Boric Acid	6-1049
Bromocresol Purple Indicator	6-1037
Buffer Solution for Cadmium	6-1051
EDTA (Ethylenediaminetetraacetic Acid, Disodium Salt) - For Cadmium Analysis	6-1046
EDTA (Ethylenediaminetetraacetic Acid, Disodium Salt) - For Nickel Analysis	6-1045
Eriochrome Black T Mixture	6-1053
Ferric Ammonium Sulfate Solution (2 Percent)	6-1032
Formaldehyde (36 Percent)	6-1050
General	6-1022
Hydrochloric Acid (1N)	6-1025
Hydrochloric Acid (1:1)	6-1042
Iodine - Potassium Iodine	6-1043
LaMotte Sulfo-Orange (ph 11.0 - 12.6)	6-1048
Methyl Orange Indicator	6-1035
Murexide Indicator	6-1044
Potassium Iodide Solution (4.2 Percent)	6-1033
Potassium Thiocyanate (0.1N)	6-1028
Silver Nitrate (0.1N)	6-1024
Sodium Chromate Solution (2 Percent)	6-1030
Sodium Cyanide (0.5N)	6-1026
Sodium Hydroxide (0.1N)	6-1027
Sodium Pyrophosphate Solution	6-1029
Sodium Sulfide (15 Percent)	6-1040
Sodium Thiosulfate (0.1N)	6-1023
Sources of Supply for Plating Chemicals	6-1054
Standard Cadmium	6-1052
Standard Nickel (4.0 ounces/gallon)	6-1047
Standard Nickel Solution	6-1034
Standard Potassium Iodate (0.1N)	6-1039
Starch Solution	6-1038
Thymolphthalein Indicator	6-1036
STARTER COUPLING	
Drive Face Fatigue Crack Rework	6-671
Inspection	6-178
Inspection for Nicks and Chips on Rear Face and Splines	6-172
Installation	6-380

ALPHABETICAL INDEX (Cont)

	Paragraph Number
Thrust Face Reconditioning	6-670
Grinding	6-665
Increased Spline Chamfer and Breakedge Radius	6-666
STARTER SHAFT	
Grind to Remove Pitting	6-664
Lap Flat Side of Seal Ring	6-668
Lap Spherical Surface of Oil Seal Ring and Retainer	6-669
Spherical Oil Seal and Retainer Lapping	6-667
Reconditioning	6-663
Thrust Face Grinding	6-663A
STATIONARY REDUCTION GEAR	
Assemble Support and Sleeve	6-295
Chrome Plate ID of Support	6-293
Base of Propeller Shaft Thrust Bearing Counterbore	6-287
Grinding	6-286
Grinding ID of Sleeve	6-296
Grinding ID of Support	6-294
Honing (-76 Series, -86A and -86B)	6-282
Honing Bore	6-283
Honing Support Sleeve Inside Diameter of	6-289
Inspection (-76C, -76D, -86A and -86B)	6-71
Lapping	6-285
Machine Support ID	6-292
Pinion Carrier Trunnions and Trunnion Thrust Faces Inspection (-80 Series)	6-72
Reconditioning (-76C, -76D, -86A and -86B)	6-284
Reconditioning By Chrome Plating (-76 Series, -86A, -86B)	6-788
Drive Gear Pinion Gear Teeth Inspection	6-73
Remove Sleeve	6-291
Support Sleeve Honing (-80 Series)	6-288
Support and Sleeve ID - Reconditioning (-80 Series)	6-290
Support Sleeve Reconditioning By Chrome Plating (-80 Series)	6-789
Support and Thrust Bearing Spacer and Bearing Assembly	7-14
STUDS	
Finish Drill Broken Studs	6-209
Installations	9-7
Install New Studs	6-213
Miscellaneous Replacement	6-206
Pilot Drilling	6-207
Remove Bent or Damaged Studs	6-211
Remove Broken Studs	6-210
Retap for New Studs	6-212
Second Drill for 7/16 Inch Diameter and Larger Broken Studs	6-208
SUBSTITUTING COVERS	
Installation	7-66
Removal	4-59
SUPERCHARGER CLUTCH	
Installation (-76 Series, -86A and -86B)	7-45
Oil Control Valve Assembly (-76 Series, -86A, and -86B)	7-44
Oil Control Valve Installation (-76 Series, -86A and -86B)	7-42
Oil Control Valve Repair By Chrome Plating (-76 Series, -86A and -86B)	6-781
Oil Control Valve Removal (-76 Series, -86A and -86B)	4-56
Oil Control Valve Sleeve Plating	6-823
Oil Control Valve Sleeve Bore	6-758
Oil Control Valve Substituting Cover Removal (-80 Series)	4-57
SUPERCHARGER DRAIN VALVE	
Assembly	7-62
Installation	7-63
Removal	4-58
Return Tube, Extension Tube and Clip Assembly	6-168
Return Tube, Recondition By Chrome and/or Copper Plating	6-820

ALPHABETICAL INDEX (Cont)

	Paragraph Number
SUPERCHARGER FRONT HOUSING	
Assembly	7-67
Bushings Replacement	6-577
Description	1-20
Diffuser Plate Contact Area, Reconditioning of	6-573
Disassembly	4-53
Engine Assembly Stand Installation	8-3
Engine Mount Bolt Holes	6-146, 6-147
Face Inspection	6-148
Inspection for Wear	6-149
Machining	6-572
Machining Limits	6-571
Mounting Bolt Holes Repair	6-576
Mounting Face Reconditioning	6-570
Oil Seal Ring Fitting in Support	6-583
Reconditioning	6-582
Removal	4-32
Support ID Honing	6-581
Wear Groove Repair	6-578
SUPERCHARGER REAR COVER	
Assembly (-80 Series, -86A and -86B)	7-51
Boss Repair	6-720
Bushing Replacement	6-723
Bushing at Pad A, Finish Boring	6-726
Bushing at Pad A, Removal	6-724
Bushings at Pads D and E, Finish Boring	6-732
Bushings at Pads D and E, Removal	6-730
Bushings at Pads D and E, Quarter Cutting	6-733
Bushing at Pad F, Finish Boring	6-738
Bushing at Pad F, Removal	6-736
Bushing at Pad H, Finish Boring	6-744
Bushing at Pad H, Removal	6-742
Bushing at Pad H, Quarter Cutting	6-745
Bushing at Pad I, Finish Boring	6-751
Bushing at Pad I, Finish Face and Countersink	6-750
Bushing at Pad I, Removal	6-748
Bushing at Pad J, Finish Boring	6-754
Bushing at Pad J, Removal	6-752
Case at Dual Accessory Drive Pad	6-719
Crack Repair	6-718A
Description	1-34
Disassembly (-76 Series, -86A and -86B)	4-72
Disassembly (-80 Series)	4-73
Fuel Pump Thrust Button Tapping at G	6-740
Generator Pads Rework	6-756
Inspection	6-180
Installation (-76 Series, -86A and -86B)	7-55
Installation (-80 Series)	7-56
Machining and Studding Assembly Repair of	6-757
New Bushing at Pad A, Installation	6-725
New Bushings at Pads D and E, Installation	6-731
New Bushing at Pad F, Installation	6-737
New Bushing at Pad H, Installation	6-743
New Bushing at Pad I, Installation	6-749
New Bushing at Pad J, Installation	6-753
New Thrust Buttons at B and C, Installation	6-324
Oil Strainer Pilot Hole Rework	6-722
Reconditioning	6-718
Removal	4-63
Magneto, Left or Right Rework	6-755
Thrust Button Bores at B and C Enlarging	6-734
Thrust Buttons at B and C Removal	6-729
Thrust Buttons at B and C Tap Drilling	6-727
Thrust Button at B and C Tapping	6-728
Thrust Button at G, Bore Enlarging	6-746
Thrust Button at G, Installing	6-747
Thrust Button at G, Removal	6-741
Thrust Button at G, Tap Drilling	6-739

ALPHABETICAL INDEX (Cont)

	Paragraph Number
SUPERCHARGER REAR HOUSING	
Assembly	7-34
Bent or Loose Stud Removal	6-619
Broken Stud Removal	6-618
Carburetor Adapter Attaching Stud Replacement	6-617
Carburetor Mounting Pad Salvage	6-615
Description	1-22
Finish Bore Hole for 0.010 Inch Oversize Bushing	6-679
Front Bushing Removal	6-678
Gun Synchronizer Substituting Cover Installation	7-58
Inspection	6-166
Installation	8-26
Magnetic Drain Plug Adapter Boss Area Rework	6-721
Manifold Absolute Pressure Regulator Substituting Cover Installation	7-57
New Sleeve Installation	6-589
New Stud Installation	6-621
New Stud, Retap for	6-620
Oil Seal Rings Fitting	6-592
Old Sleeve Refinishing	6-590
Pilot Diameter Rework by Plasma Spray	6-662A
Sleeve Attaching Screw Holes Air Test	6-593
Sleeve Hole Reboring for Oversize	6-585
Sleeve ID Face Polishing and Honing	6-588
Sleeve ID, Grinding and Facing off	6-587
Sleeve Inspection	6-167
Sleeve Installation	6-586
Sleeve Reconditioning	6-591
Sleeve Removal	6-584
SUPERCHARGER REAR SECTION	
Inspection	6-146
Removal	4-11
Removal by Alternate Procedure	4-12
TACHOMETER DRIVE	
Bushings, Bore Burnishing	6-764
Bushing Hole Bore Undercut at Anti-Flange End in Housing	6-761
Bushing Holes Reaming, in Housing and Cover, to Oversize	6-762
Bushings, Installation of New, in Housing and Cover	6-763
Bushings, Removing Old from Housing and Cover	6-760
Shaft Gear Assembly Spring Inspection	6-179
Shaft Gear Small Bushing Replacement	6-759
TIN PLATING	
Application of Alodine to Aluminum Parts	6-898
Dulite Stripping Procedure (Steel)	6-893
General	6-892
Lubrize Stripping Procedure (Steel)	6-894
Procedure (Steel)	6-896
Special Applications	6-897
Tin Stripping Procedure (Steel)	6-895
VALVES	
Assembly	7-27
Clearance Adjustment	8-21
Description	1-16
Exhaust Guide Boss Erosion Limits	6-139
Exhaust Valve Guide Rework	6-472A
Inspection	6-131, 6-133
Intake Valve Cracking	6-135
Intake Valve Stems and Lock Grooves, Nicks and Dents on Nitrided Surfaces of	6-134
Nomenclature	6-132
Oil Pressure Relief Valve and Body Rework	6-[illegible]6
Reconditioning	6-496
Guides Inspection	6-138

ALPHABETICAL INDEX (Cont)

	Paragraph Number
Lock Groove Inspection and Limits	6-136
Seats	6-140
Springs Inspection	6-137
VALVE TAPPETS	
Bore Reaming	6-240
Guide Assembly	7-33
Guides, Chrome or Copper Plating for Oversize	6-814
Guides, Chrome Plating	6-241
Guides, Copper Plating	6-242
Guide Installation	8-11
Guide OD and Housing Guide Bores Reconditioning	6-237
Guide Pad Resurfacing	6-238
Guide Plasma Spray Coating for Oversize	6-817
Guide Removal	4-24
Intake Guide Bore Oil Feed Holes Plugging	6-239
Preparation for Wet Blasting	6-566
Roller ID Grinding	6-564
Roller ID Reconditioning	6-563
Rollers Inspection	6-141
Roller Tracks Inspection	6-562
Roller Tracks (OD Surfaces) Grinding	6-561
Roller Tracks Reconditioning	6-560
Rollers, Wet Blasting	6-565, 6-568
Socket and Spring Installation	8-15
Socket and Spring Removal	4-23
Sockets Inspection	6-142
Socket Salvage	6-569
Wet Blast Solution Mixture	6-567